Rail-Mount Terminal Block Systems

Full Line Catalog, Volume 1 – Edition 2017/2018

1

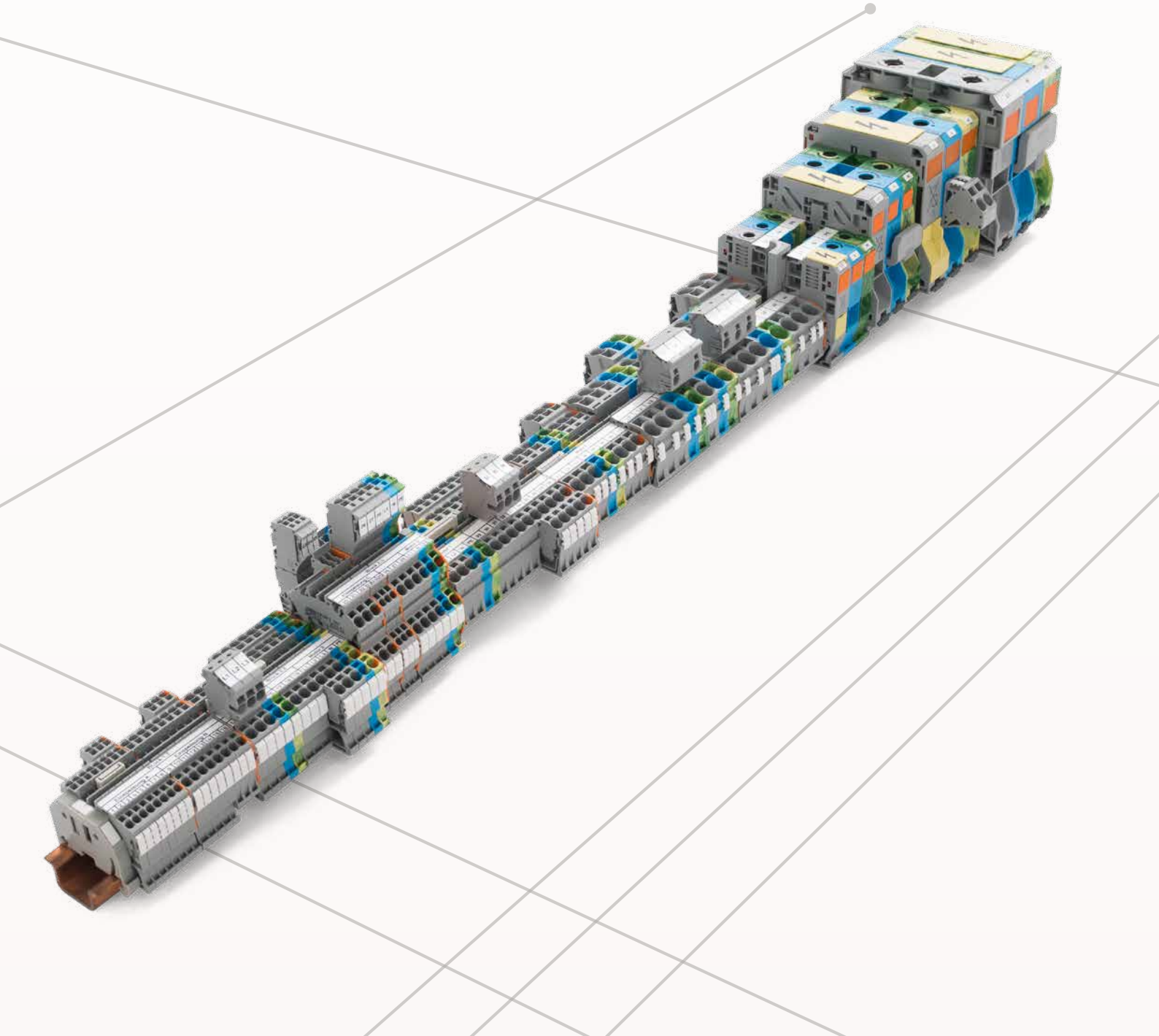

WAGO Full Line Catalogs



Volume 1, Rail-Mount Terminal Block Systems

- Rail-Mount Terminal Blocks
- Rail-Mount Terminal Blocks with Pluggable Connector (X-COM®-SYSTEM)
- Patchboard Systems
- Terminal Strips
- PUSH WIRE® Connectors for Junction Boxes
- Lighting Connectors
- Shield Connecting System



Volume 2, PCB Terminal Blocks and Connectors

- PCB Terminal Blocks
- SMD PCB Terminal Blocks
- *MULTI CONNECTION SYSTEM (MCS)*
- Pluggable PCB Terminal Blocks
- Feedthrough Terminal Blocks
- Specialty Connectors
- Empty Housings



Volume 3, Automation Technology

- Software
- Operating & Monitoring
- Controllers
- Modular I/O-SYSTEM, IP20/IP67
- Industrial Switches
- Radio Technology, *TO-PASS*® Telecontrol Technology
- IP67 Sensor/Actuator Boxes, IP67 Cables and Connectors



Volume 4, Interface Electronic

- Relay and Optocoupler Modules
- *JUMPFLEX*® Signal Conditioners and Isolation Amplifiers
- Current and Energy Measurement Technology
- *EPSITRON*® Power Supply System
- Interface Modules and System Wiring
- Overvoltage Protection
- Empty Housings



Volume 5, *WINSTA*® – The Pluggable Connection System

- Pluggable Connectors
- Snap-In Device Connectors
- Pluggable PCB Connectors
- Distribution Connectors
- Cable Assemblies
- Flat Cable Systems
- Distribution Boxes



Volume 6, Marking

- Terminal Block Marking
- Cable and Conductor Marking
- Device Marking
- Printer
- Software
- Marker Carriers

Volume 1, Rail-Mount Terminal Block Systems

			Page	
	**Rail-Mount Terminal Blocks, TOPJOB® S** Front-entry wiring	Push-in CAGE CLAMP® 1 … 16 (25 "f-st") mm² (16 … 4 AWG) for DIN-35 rail	21	1
	**Rail-Mount Terminal Blocks with a Pluggable Connector, X-COM®S-SYSTEM** Front-entry wiring	Push-in CAGE CLAMP® 1 … 2.5 (4) mm² (16 … 12 AWG) for DIN-35 rail	147	2
	**Installation Rail-Mount Terminal Blocks, TOPJOB® S** Front-entry wiring	Push-in CAGE CLAMP® 1 … 4 (6) mm² (16 … 10 AWG) for DIN-35 rail	185	3
	**High-current, Rail-Mount Terminal Blocks High-Current Connectors** Side-entry wiring	POWER CAGE CLAMP 35 … 185 mm² (2 AWG … 350 kcmil), 1500 V nominal voltage, for DIN-35 rail	201	4
	**Rail-Mount Terminal Blocks, Classic** **Installation Rail-Mount Terminal Blocks, TOPJOB®, Classic** Front-entry wiring	CAGE CLAMP® 1.5 … 35 mm² (16 … 2 AWG) for DIN-35 rail	215	5
	**Rail-Mount Terminal Blocks with a Pluggable Connector, X-COM®-SYSTEM, Classic** Front-entry wiring	CAGE CLAMP® 2.5 (4) mm² (12 AWG) for DIN-35 rail	335	6
	**Rail-Mount Terminal Blocks, Miniature** **Rail-Mount Terminal Blocks, Compact** Front-entry wiring	CAGE CLAMP® 2.5 mm² (4 mm²) (12 AWG) for DIN-35 and DIN-15 rails	405	7
	**Modular Terminal Blocks and Terminal Strips** Side-/front-entry wiring	CAGE CLAMP® 1.5 … 4 mm² (16 … 12 AWG) for panel mounting	429	8
	**Field-Wiring Terminal Blocks and Chassis-Mount Terminal Strips** Side-entry wiring	Push-in CAGE CLAMP® 2.5 mm² (22 AWG), 4 mm² (12 AWG) for panel mounting	459	9
	**Rail-Mount Terminal Blocks, Classic** Side-entry wiring	CAGE CLAMP® 1.5 … 16 mm² (16 … 6 AWG) for DIN-35 rail	487	10
	**Terminal Blocks for Matrix Patching and Potential Distribution, Busbar Terminal Blocks**	CAGE CLAMP® 1.5 … 16 mm² (16 … 6 AWG)	499	11
	**Lighting Connectors, PUSH WIRE® Connectors for Junction Boxes, Splicing Connectors for All Conductor Types**		523	12
	**Accessories and Tools**		553	13
	**Technical Section**		609	14
	**Index and Addresses**		657	15

Operating WAGO Connection Technologies

Please follow the applicable product-specific termination instructions.

PUSH-IN CAGE CLAMP®







Push-in CAGE CLAMP® terminates the following copper conductors:
solid



stranded



fine-stranded, also with tinned single strands



fine-stranded, tip-bonded



fine-stranded, with ferrule (gastight crimped)



fine-stranded, with pin terminal (gastight crimped)

The universal connection with an additional advantage: Push-in connection
Terminate solid and stranded (Class B 7 strands or less), as well as ferruled conductors, by simply pushing them in – no tools required.

Termination for all conductor types:
- Open clamping unit.
- Insert the conductor.
- Release clamp – done!

CAGE CLAMP®

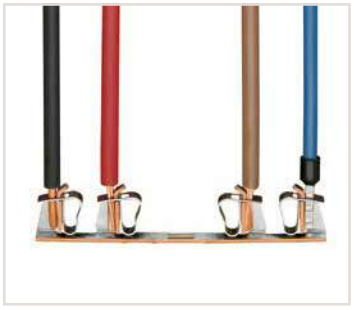

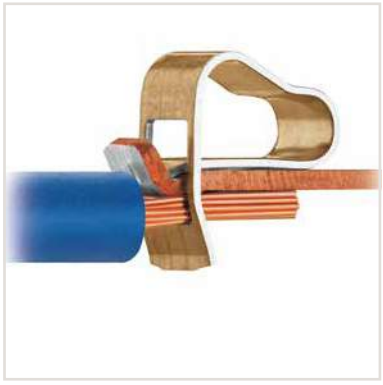



CAGE CLAMP® terminates the following copper conductors:
solid



stranded



fine-stranded, also with tinned single strands



fine-stranded, tip-bonded



fine-stranded, with ferrule (gastight crimped)



fine-stranded, with pin terminal (gastight crimped)

The universal connection for solid, stranded and fine-stranded conductors

Termination:
- Open clamping unit.
- Insert the conductor.
- Release clamp – done!

Operating WAGO Connection Technologies

Please follow the applicable product-specific termination instructions.

POWER CAGE CLAMP®







POWER CAGE CLAMP terminates the following copper conductors:
solid



stranded



fine-stranded, also with tinned single strands



fine-stranded, with ferrule (gastight crimped)

The universal connection for conductors larger than 35 mm² (2 AWG)

Termination:

- Open clamp by turning a T-wrench counter-clockwise.
- Press the integrated latch to open clamping unit for hands-free wiring.
- Insert the conductor.
- A small counter-clockwise rotation closes the clamp, securing conductor.

PUSH WIRE®



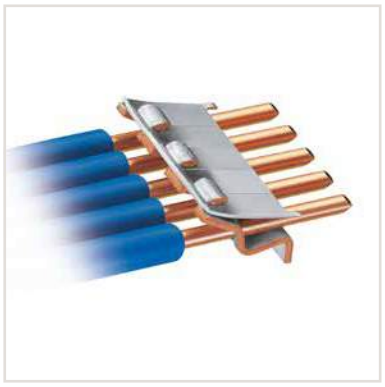



PUSH WIRE® terminates the following copper conductors:
solid

PUSH WIRE® connection for solid and stranded conductors (depending on the model used)

Termination:

Tool-free, twist-free terminations for solid and rigid stranded conductors – simply push into the unit.

Product Overview

TOPJOB® S
Rail-Mount Terminal Blocks with Push-in CAGE CLAMP® Connection

Through terminal blocks



Page 28

Ground conductor terminal blocks



Page 28

Shield terminal blocks



Page 30

TOPJOB® S
Rail-Mount Terminal Blocks with Push-in CAGE CLAMP® Connection

Double-potential terminal blocks

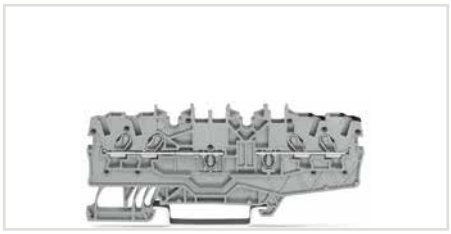

Page 29

Double-deck terminal blocks



Page 42

Double-deck disconnect terminal blocks



Page 56

TOPJOB® S
Rail-Mount Terminal Blocks with Push-in CAGE CLAMP® Connection

Double-deck carrier terminal blocks



Page 56

Double-deck fuse terminal blocks



Page 57

Triple-deck terminal blocks



Page 58

TOPJOB® S
Rail-Mount Terminal Blocks with Push-in CAGE CLAMP® Connection

Quadruple-deck, rail-mount terminal blocks for electric motor wiring



Page 60

Disconnect/test terminal blocks



Page 64

Disconnect/test terminal blocks for current and voltage transformer circuits



Page 92

Product Overview

TOPJOB® S
Rail-Mount Terminal Blocks with Push-in CAGE CLAMP® Connection

Fuse terminal blocks for automotive blade-style fuses

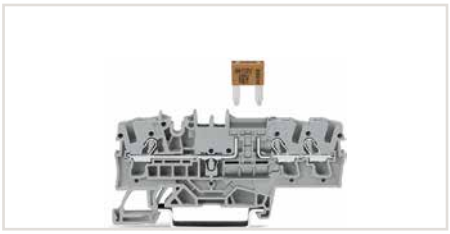

Page 70

Fuse disconnect terminal blocks with a pivoting fuse holder

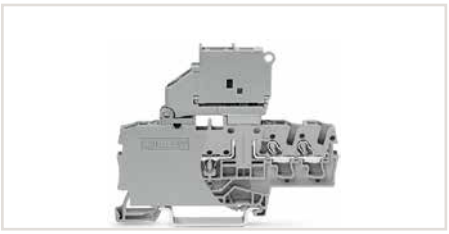

Page 72

Fuse plugs and carrier terminal blocks



Page 96

TOPJOB® S
Rail-Mount Terminal Blocks with Push-in CAGE CLAMP® Connection

Sensor terminal blocks

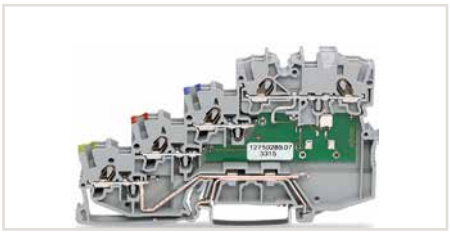

Page 102

Actuator terminal blocks



Page 104

Sensor and actuator supply terminal blocks



Page 102

TOPJOB® S
Rail-Mount Terminal Blocks with Push-in CAGE CLAMP® Connection

Diode terminal blocks



Page 110

LED terminal blocks



Page 110

Multilevel diode and LED terminal blocks



Page 116

TOPJOB® S
Rail-Mount Terminal Blocks with Push-in CAGE CLAMP® Connection

Diode modules



Page 120

LED modules



Page 122

Empty component plug housings



Page 126

Product Overview

X-COM®S-SYSTEM-MINI
Rail-Mount Terminal Blocks with a Pluggable Connector

Carrier terminal blocks



Page 150

Ground carrier terminal blocks



Page 150

Double-deck carrier terminal blocks

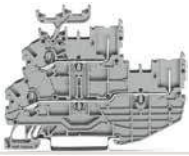

Page 152

X-COM®S-SYSTEM-MINI
Rail-Mount Terminal Blocks with a Pluggable Connector

1-conductor female plugs



Page 154

2-conductor female plugs



Page 154

Pre-assembled female plugs

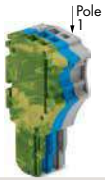

Page 158

X-COM®S-SYSTEM-MINI
Rail-Mount Terminal Blocks with a Pluggable Connector

Female plugs for self-assembly



Page 156

Female plugs with locking levers and strain relief plates



Page 162

X-COM®S-SYSTEM
Rail-Mount Terminal Blocks with a Pluggable Connector

Carrier terminal blocks

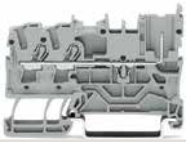

Page 166

Ground carrier terminal blocks



Page 166

Double-deck carrier terminal blocks



Page 168

Product Overview

X-COM®S-SYSTEM
Rail-Mount Terminal Blocks with a Pluggable Connector

Female plugs

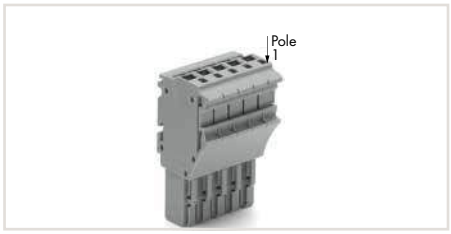

Page 170

Pre-assembled female plugs

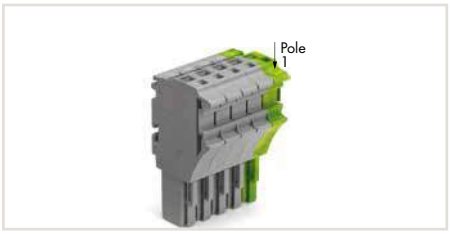

Page 174

Female plugs for self-assembly



Page 172

X-COM®S-SYSTEM
Rail-Mount Terminal Blocks with a Pluggable Connector

Female plugs with locking levers and strain relief plates

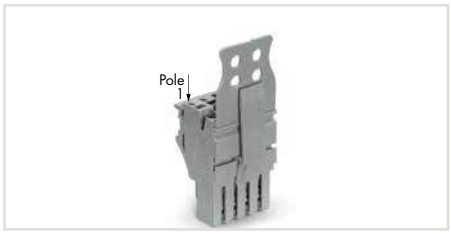

Page 176

X-COM®S-SYSTEM
Rail-Mount Terminal Blocks with a Pluggable Connector for Ex Applications

Carrier terminal blocks for Ex nA applications

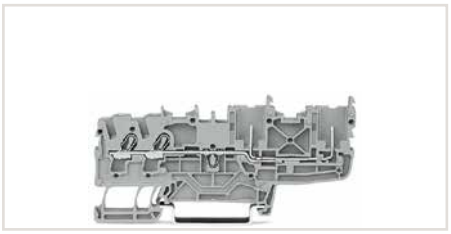

Page 178

Ground carrier terminal blocks for Ex nA applications



Page 178

X-COM®S-SYSTEM
Rail-Mount Terminal Blocks with a Pluggable Connector for Ex Applications

Double-deck carrier terminal blocks for Ex nA applications

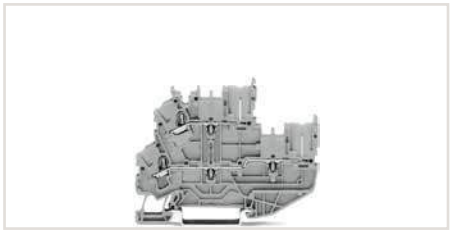

Page 180

Female plugs for Ex nA applications



Page 182

Pre-assembled female plugs for Ex nA applications

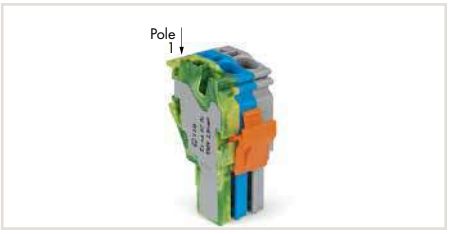

Page 183

Product Overview

TOPJOB® S
Installation Rail-Mount Terminal Blocks with Push-in CAGE CLAMP® Connection

Multilevel installation terminal blocks with an N-disconnect slide link, 2.5 (4) mm² (12 AWG)



Page 188

Multilevel installation terminal blocks with an internal N-disconnection



Page 190

Double-fuse plugs



Page 192

TOPJOB® S
Installation Rail-Mount Terminal Blocks with Push-in CAGE CLAMP® Connection

Multilevel installation terminal blocks with an N-disconnect slide link, 4 (6) mm² (10 AWG)



Page 194

N-conductor disconnect terminal blocks and power distribution disconnect terminal blocks



Page 196

Distribution supply terminal blocks



Page 198

High-Current, Rail-Mount Terminal Blocks

Through terminal blocks, 35 mm² (2 AWG)



Page 204

Ground conductor terminal blocks, 35 mm² (2 AWG)



Page 204

Power taps for 35 mm² (2 AWG) terminal blocks



Page 204

High-Current, Rail-Mount Terminal Blocks

Through terminal blocks, 50 mm² (1/0 AWG)



Page 208

Ground conductor terminal blocks, 50 mm² (1/0 AWG)



Page 208

Power taps for 50 mm² (1/0 AWG) terminal blocks



Page 208

Product Overview

High-Current, Rail-Mount Terminal Blocks

Through terminal blocks with mounting flanges, 50 mm² (1/0 AWG)



Page 209

Through terminal blocks with mounting flanges, 50 mm² (1/0 AWG)



Page 209

High-Current, Rail-Mount Terminal Blocks

Through terminal blocks, 95 mm² (4/0 AWG)



Page 210

Through terminal blocks with mounting flanges, 95 mm² (4/0 AWG)



Page 211

Power taps for 95 mm² (4/0 AWG) terminal blocks



Page 210

High-Current, Rail-Mount Terminal Blocks

Through terminal blocks, 185 mm² (350 kcmil)



Page 212

Ground conductor terminal blocks, 185 mm² (350 kcmil)



Page 212

Power taps for 185 mm² (350 kcmil) terminal blocks



Page 212

High-Current, Rail-Mount Terminal Blocks

Through terminal blocks with mounting flanges, 185 mm² (350 kcmil)



Page 213

Through terminal blocks with mounting flanges, 185 mm² (350 kcmil)



Page 213

Product Overview

Rail-Mount Terminal Blocks with CAGE CLAMP® Connection, Front-Entry Wiring

Through terminal blocks



Page 218

Ground conductor terminal blocks



Page 218

Shield terminal blocks



Page 218

Rail-Mount Terminal Blocks with CAGE CLAMP® Connection, Front-Entry Wiring

Double-potential terminal blocks

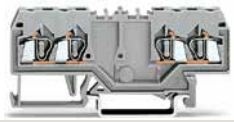

Page 219

Distribution terminal blocks



Page 233

Double-deck terminal blocks

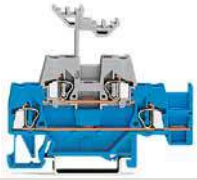

Page 236

Rail-Mount Terminal Blocks with CAGE CLAMP® Connection, Front-Entry Wiring

Triple-deck terminal blocks



Page 246

Quadruple-deck, rail-mount terminal blocks for electric motor wiring

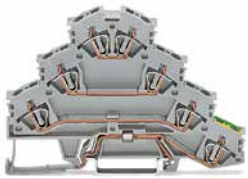

Page 248

Disconnect/test terminal blocks

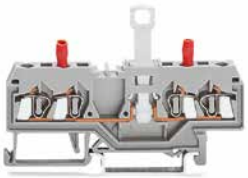

Page 262

Rail-Mount Terminal Blocks with CAGE CLAMP® Connection, Front-Entry Wiring

Disconnect/test terminal blocks



Page 260

Disconnect/test terminal blocks for current and voltage transformer circuits

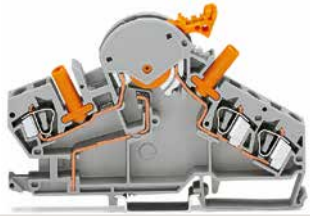

Page 270

Ground conductor disconnect terminal blocks



Page 276

Product Overview

Rail-Mount Terminal Blocks with CAGE CLAMP® Connection, Front-Entry Wiring

Fuse terminal blocks for automotive blade-style fuses

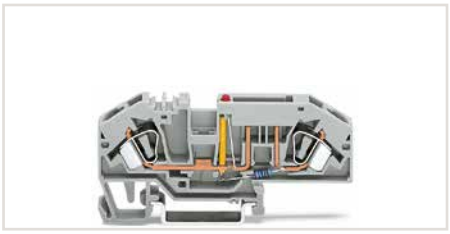

Page 278

Fuse disconnect terminal blocks with a pivoting fuse holder



Page 282

Fuse terminal blocks for class CC fuses and 10 x 38 mm (13⁄32″ x 1½″) cylindrical fuses



Page 290

Rail-Mount Terminal Blocks with CAGE CLAMP® Connection, Front-Entry Wiring

Fuse plugs and carrier terminal blocks



Page 286

Diode terminal blocks

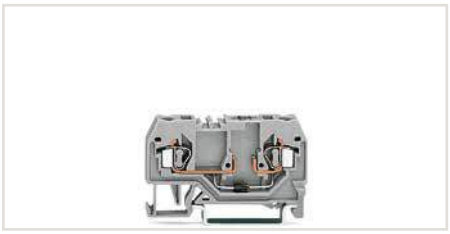

Page 312

LED terminal blocks

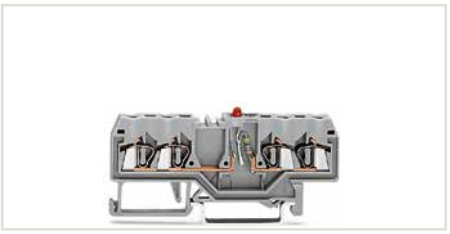

Page 312

Rail-Mount Terminal Blocks with CAGE CLAMP® Connection, Front-Entry Wiring

Diode modules



Page 322

LED modules



Page 324

Sensor and actuator terminal blocks

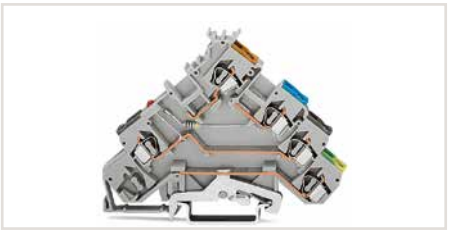

Page 296

TOPJOB® Classic
Rail-Mount Terminal Blocks with CAGE CLAMP® Connection

Through terminal blocks

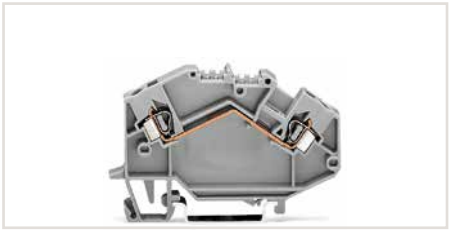

Page 251

Ground conductor terminal blocks



Page 251

N-conductor disconnect terminal blocks and power distribution disconnect terminal blocks



Page 255

Product Overview

X-COM®-SYSTEM, Classic
Rail-Mount Terminal Blocks with a Pluggable Connector

Carrier terminal blocks

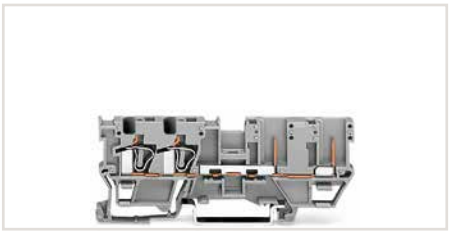

Page 342

Ground carrier terminal blocks



Page 342

Disconnect carrier terminal blocks



Page 354

X-COM®-SYSTEM, Classic
Rail-Mount Terminal Blocks with a Pluggable Connector

Diode carrier terminal blocks

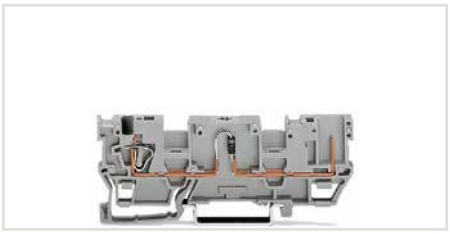

Page 356

LED carrier terminal blocks

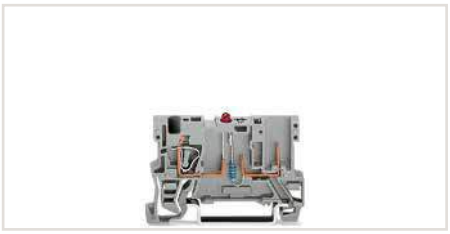

Page 358

Carrier terminal blocks for pluggable modules

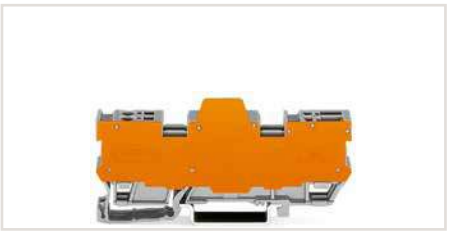

Page 364

X-COM®-SYSTEM, Classic
Rail-Mount Terminal Blocks with a Pluggable Connector

Double-deck carrier terminal blocks



Page 372

Male connectors with CAGE CLAMP® connection



Page 382

Male headers with solder pins



Page 386

X-COM®-SYSTEM, Classic
Rail-Mount Terminal Blocks with a Pluggable Connector

Female plugs with and without lateral locking levers

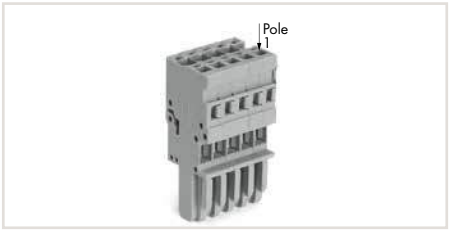

Page 392

Female plugs for self-assembly



Page 396

Pre-assembled female plugs

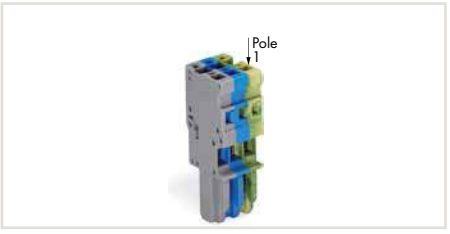

Page 398

Product Overview

Miniature Rail-Mount Terminal Blocks with CAGE CLAMP® Connection

Through terminal blocks for DIN-35 rail



Page 408

Ground conductor terminal blocks for DIN-35 rail



Page 408

Ex e II through terminal blocks for DIN-35 rail



Page 408

Miniature Rail-Mount Terminal Blocks with CAGE CLAMP® Connection

Through terminal blocks for DIN-15 rail



Page 409

Ground conductor terminal blocks for DIN-15 rail



Page 409

Ex e II through terminal blocks for DIN-15 rail



Page 409

Compact Rail-Mount Terminal Blocks with CAGE CLAMP COMPACT Connection

Through terminal blocks for DIN-35 rail



Page 412

Ground conductor terminal blocks for DIN-35 rail



Page 412

Ex e II through terminal blocks for DIN-35 rail



Page 412

Compact Rail-Mount Terminal Blocks with CAGE CLAMP COMPACT Connection

Through terminal blocks for DIN-15 rail



Page 413

Ground conductor terminal blocks for DIN-15 rail



Page 413

Ex e II through terminal blocks for DIN-15 rail



Page 413

Product Overview

Compact Rail-Mount Terminal Blocks with CAGE CLAMP COMPACT Connection

Double-potential terminal blocks

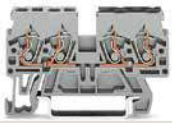

Page 413

Double-deck terminal blocks

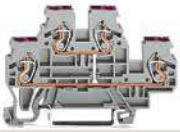

Page 414

Triple-deck terminal blocks



Page 416

Compact Rail-Mount Terminal Blocks with CAGE CLAMP COMPACT Connection

Sensor and actuator terminal blocks



Page 425

Sensor and actuator supply terminal blocks



Page 425

Accessories (Selection)

Pluggable tap-off modules



Page 423

Modular Terminal Blocks and Terminal Strips

Modular terminal blocks



Page 432

Terminal strips with mounting flanges



Page 431

Terminal strips with snap-in mounting feet



Page 431

Modular Terminal Blocks and Terminal Strips

Modular terminal blocks



Page 436

Terminal strips with mounting flanges



Page 438

Terminal strips with snap-in mounting feet



Page 438

Product Overview

Modular Terminal Blocks and Terminal Strips

Modular terminal blocks



Page 442

Terminal strips with mounting flanges



Page 443

Terminal strips with snap-in mounting feet



Page 443

Chassis-Mount Terminal Strips and Field-Wiring Terminal Blocks

4-conductor, chassis-mount terminal strips



Page 462

Field-wiring terminal blocks



Page 473

Field-wiring terminal blocks for fluorescent lighting fixtures

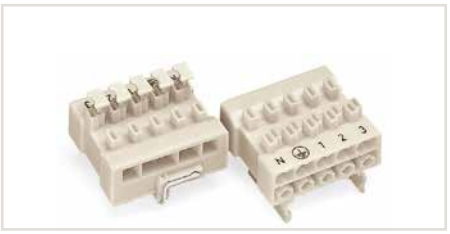

Page 484

Rail-Mount Terminal Blocks with CAGE CLAMP® Connection, Side-Entry Wiring

Through terminal blocks



Page 491

Ground conductor terminal blocks



Page 491

Disconnect/test terminal blocks

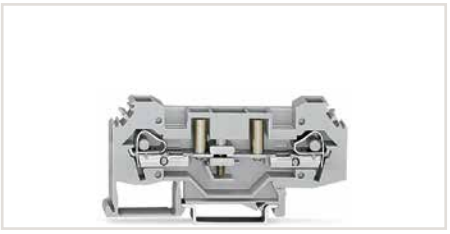

Page 494

Rail-Mount Terminal Blocks with CAGE CLAMP® Connection, Side-Entry Wiring

Ground conductor disconnect terminal blocks

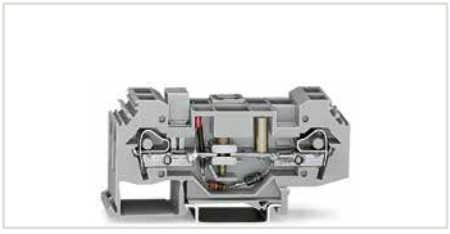

Page 495

Fuse terminal blocks for miniature fuses



Page 496

Product Overview

Patchboard Systems

Matrix patchboards



Page 502

Matrix patchboards with push-buttons



Page 508

Additional modules



Page 510

Patchboard Systems

Terminal blocks for matrix patching



Page 514

Common potential terminal blocks



Page 515

3-conductor, double-potential terminal blocks or terminal blocks for matrix patching



Page 519

Busbar Terminal Blocks

Busbar terminal blocks



Page 521

Ground busbar terminal blocks



Page 521

Insulated busbar carriers



Page 521

PUSH WIRE® Connectors for Junction Boxes

COMPACT PUSH WIRE® connectors for junction boxes



Page 525

COMPACT PUSH WIRE® connectors for junction boxes



Page 525

Mounting carriers



Page 525

Product Overview

PUSH WIRE® Connectors for Junction Boxes

PUSH WIRE® connectors for junction boxes



Page 528

Ex PUSH WIRE® connectors for junction boxes



Page 530

Mounting carriers



Page 527

PUSH WIRE® Connectors for Junction Boxes

MICRO PUSH WIRE® connectors for junction boxes



Page 534

MICRO PUSH WIRE® connectors for junction boxes



Page 534

Mounting carriers

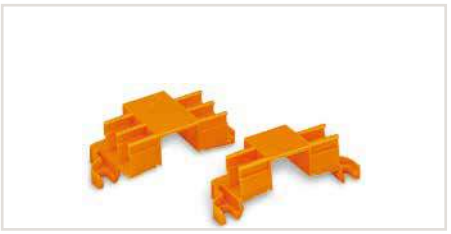

Page 535

Splicing Connectors for All Conductor Types

COMPACT splicing connectors for all conductor types



Page 537

COMPACT splicing connectors for all conductor types



Page 537

Mounting carriers



Page 539

Splicing Connectors for All Conductor Types

CLASSIC splicing connectors for all conductor types



Page 543

CLASSIC splicing connectors for all conductor types



Page 543

Mounting carriers



Page 545

Product Overview

Lighting Connectors

Lighting connectors



Page 549

Lighting connectors



Page 549

Luminaire disconnect connectors

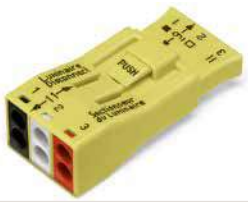

Page 550

Vario-T-BOXX



Page 546

L-BOXX® 102



Page 546

Shield Connecting System

Shield clamping saddles



Page 559

Shield clamping saddles



Page 556

Busbar carriers



Page 562

Marking Accessories

Marking cards



Page 580

Marker carriers



Seite 583

Marking cards



Seite 586

Product Overview

Mounting Accessories

Screwless end stops



Page 588

DIN-35 rails



Page 590

Collective jumper carriers



Page 591

Mounting Accessories

Covers



Page 593

DIN-15 rails



Page 595

Tools

Operating tools



Page 596

Cable strippers



Page 598

Stripping tools



Page 599

Tools

Crimping tools



Page 600

Ferrules



Page 601

Measurement devices



Page 606

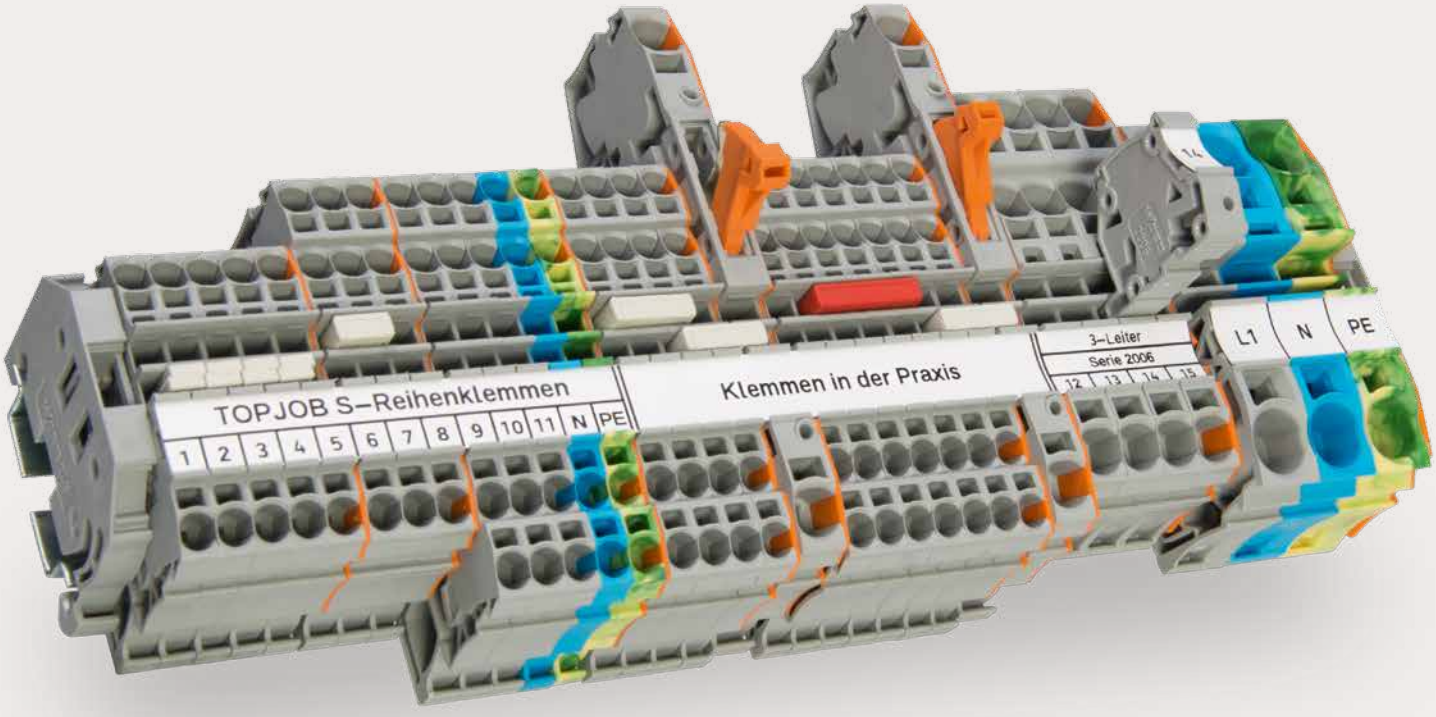

Rail-Mount Terminal Blocks, TOPJOB® S

Rail-Mount Terminal Blocks, TOPJOB® S with Push-in CAGE CLAMP® Connection

Front-Entry Wiring

			Page
	**Through, Ground Conductor, Shield and Ex Terminal Blocks** 0.14 … 16 (25 “f-st”) mm² (24 … 4 AWG)	2000 … 2016 Series	28
	**Multilevel Rail-Mount Terminal Blocks** 1 (1.5) mm² (16 AWG) and 2.5 (4) mm² (12 AWG)	2000/2002 Series	42
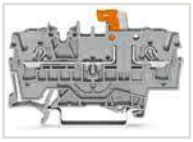	**Disconnect/Test/Fuse Terminal Blocks and Through Terminal Blocks of Same Profile** 0.25 … 2.5 (4) mm² (22 … 12 AWG)	2002 Series	62
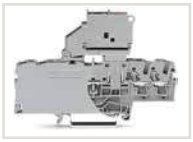	**Fuse Disconnect Terminal Blocks with a Pivoting Fuse Holder** 0.25 … 2.5 (4) mm² (22 … 12 AWG)	2002 Series	72
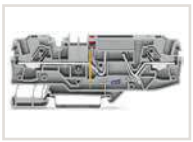	**Disconnect, Ground Conductor Disconnect Terminal Blocks and Fuse Terminal Blocks** 0.5 … 6 (10) mm² (20 … 8 AWG)	2006 Series	80
	**Disconnect/Test Terminal Blocks for Current and Voltage Transformer Circuits** 0.5 … 6 (10) mm² (20 … 8 AWG)	2007 Series	92
	**Fuse Plugs on Carrier Terminal Blocks**	2004/2006 Series	96
	**Sensor and Actuator Terminal Blocks** 0.14 … 1 (1.5) mm² (24 … 16 AWG)	2000/2020 Series	102
	**Diode and LED Terminal Blocks** 0.25 … 4 (6) mm² (22 … 10 AWG)	2001/2002/2004 Series	110
	**Multilevel Diode and LED Terminal Blocks** 0.25 … 2.5 (4) mm² (22 … 12 AWG)	2002 Series	116
	**Diode, LED Modules and Empty Component Plug Housings**	2002 Series	120
	**Accessories for TOPJOB® S Rail-Mount Terminal Blocks**		128

Push-in CAGE CLAMP® Rail-Mount Terminal Blocks 2000 to 2016 Series

Description and Installation

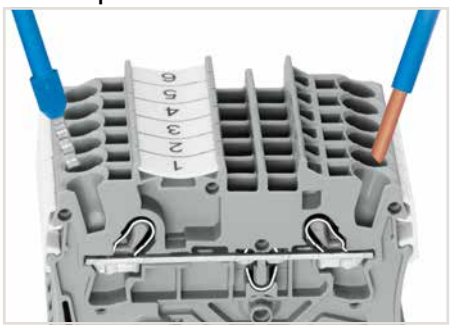

Inserting solid and ferruled conductors via push-in connection.

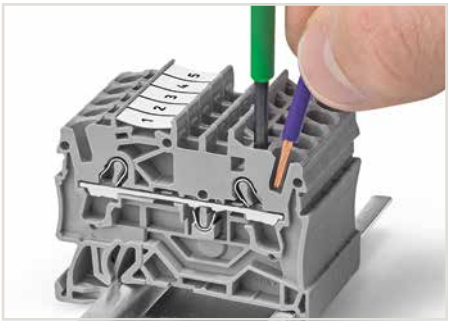

Inserting fine-stranded conductors via operating tool.

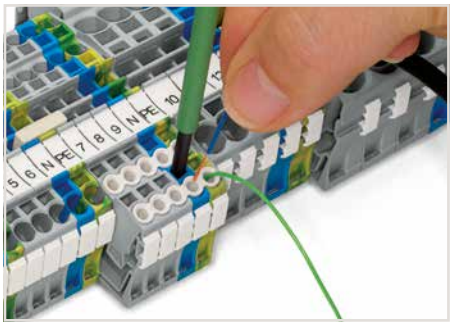

Conductor termination – Insulation stop.

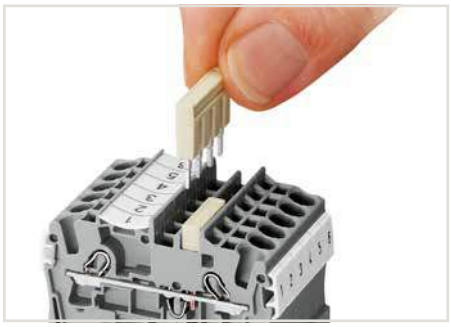

Insert push-in type jumper bar and push down firmly until it hits the backstop.



Custom jumpers are created by breaking and removing jumper contacts (2000, 2001, 2002, 2004 Series).



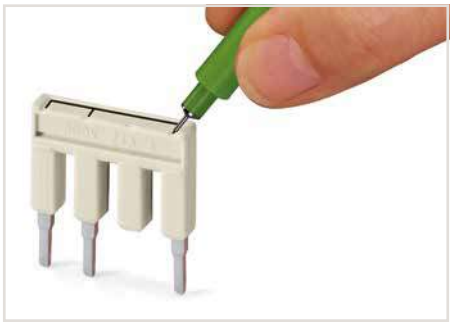

Marking a push-in type jumper bar using a felt-tip pen.

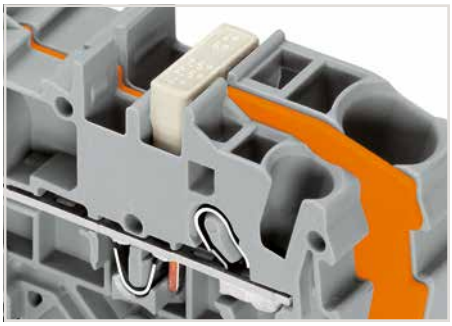

Commoning with a step-down jumper.

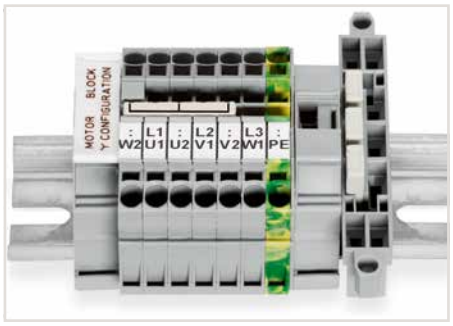

This star point jumper has been specially developed to create a "star point" and is used on motor terminal boards equipped with TOPJOB® S rail-mount terminal blocks.



Push-in CAGE CLAMP® terminates the following copper conductors:
solid



stranded



fine-stranded, also with tinned single strands



Rail-mount terminal block assembly for electric motor wiring



L-type test plug modules fitted in a triple-deck terminal block



Testing tap (2009-182) for tool-free connection of test cables up to 2.5 mm² (12 AWG) – compatible with 2000 to 2016 Series

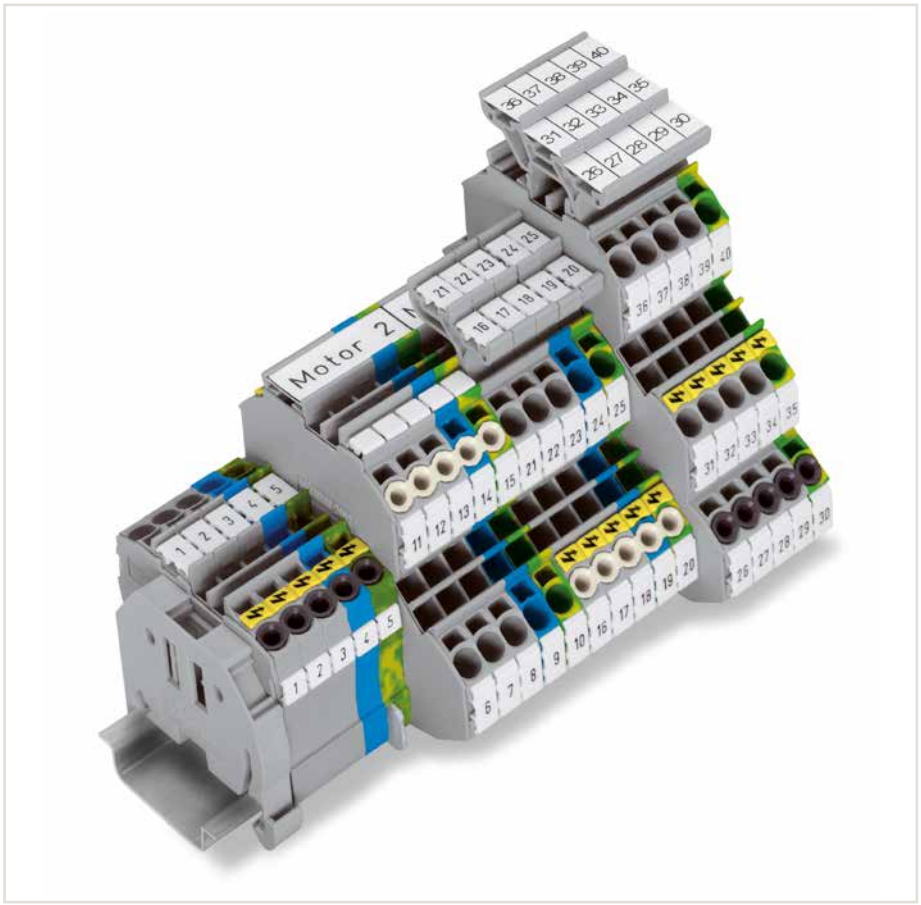

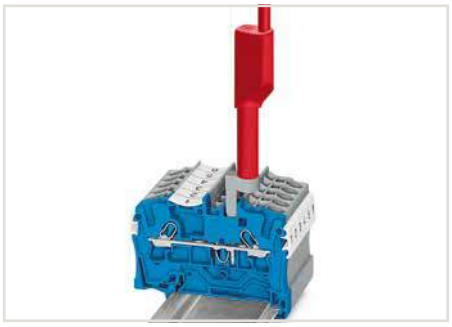

Test plug adapter (2009-174, CAT I) for 4 mm Ø plugs – compatible with 2000 to 2016 Series



Group marker carrier (2009-163) for marking strips (2009-110)

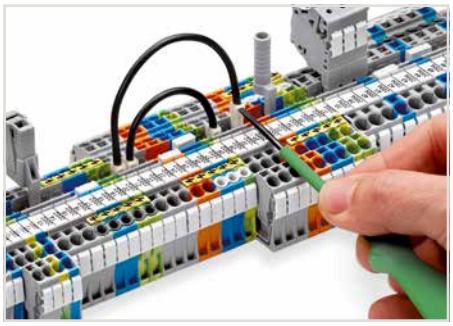

Push down the wire jumper until fully inserted. Lift the jumper with an operating tool for rewiring.

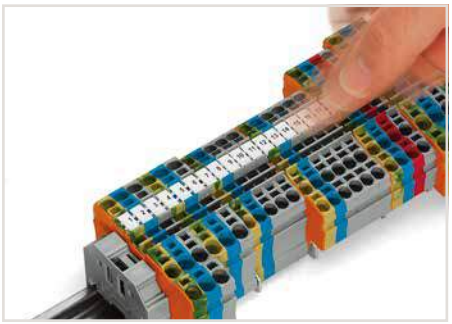

WMB Inline:
Snapping a strip into the marker slots.

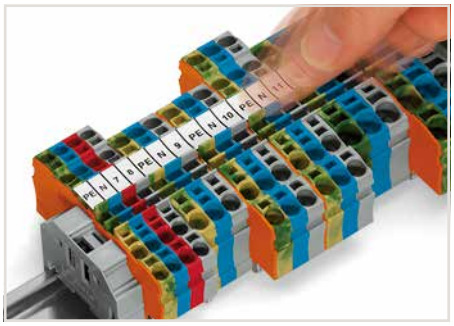

Marking strips:
Snapping a strip into the marker slots.



fine-stranded,
tip-bonded



fine-stranded,
with ferrule
(gastight crimped)



fine-stranded,
with pin terminal
(gastight crimped)

TOPJOB® S
Conductor Insertion/Removal
Installation



Inserting conductors via push-in termination.
Stripped solid, ferruled or ultrasonically "bonded" conductors can be simply pushed in – without tools.
This advantage significantly reduces wiring costs for conductors rated 0.5 mm² (20 AWG) to 16 mm² (4 AWG) in applications such as electrical installations or factory wiring.

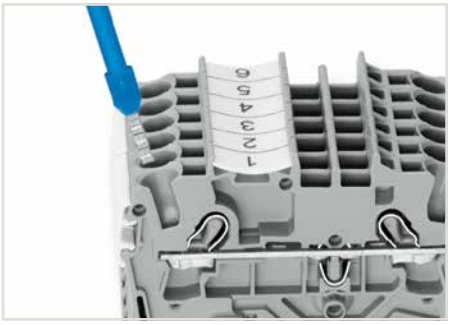

Fine-stranded conductors with ferrules from at least two sizes below the rated cross-section up to the rated cross-section can also be simply pushed in – without tools.



Inserting conductors via push-in termination.
Solid conductors with cross-sections from either one size above, or up to two sizes below, the rated cross-section can be simply pushed in – no tools needed.

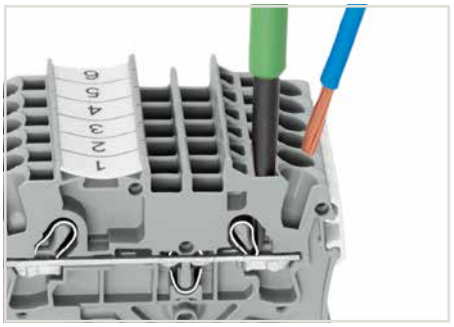

Inserting a conductor via operating tool.
Connecting fine-stranded conductors without ferrules, or small cross-sectional conductors that cannot be pushed in, is performed similarly to the original CAGE CLAMP® – just use an operating tool.
The smart feature:
To open the clamp, the operating tool is inserted vertically. The conductor entry is less than 15 degrees for easier wiring.

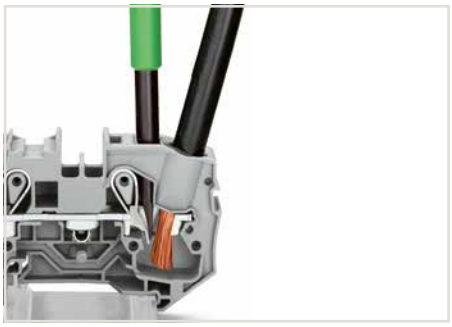

Removing a conductor.
Conductor removal is performed with an operating tool, just like CAGE CLAMP®.

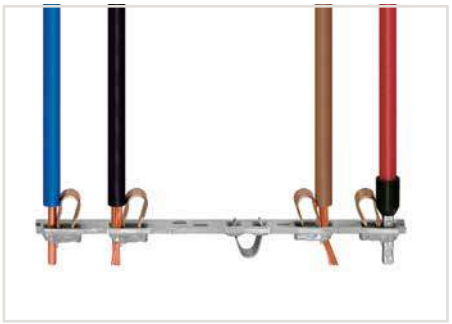

All conductor types at a glance

TOPJOB® S
Push-In Type Jumper Bars
Installation



Push-in type jumper bars (2000 to 2016 Series)
800 V
600 V
550 V

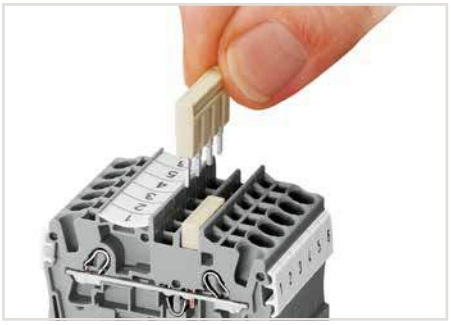

The push-in type jumper bar system is based on the common plug and socket principle. Each terminal block is spring-loaded with a double socket and a resilient CrNi steel spring. The jumper contact material is pure electrolytic copper, which allows for an extremely small design capable of carrying the full-rated current of the terminal block. Ground terminal blocks can also be commoned using the same jumper system. Custom jumpers are created by breaking and removing jumper contacts (2000, 2001, 2002, 2004 Series).

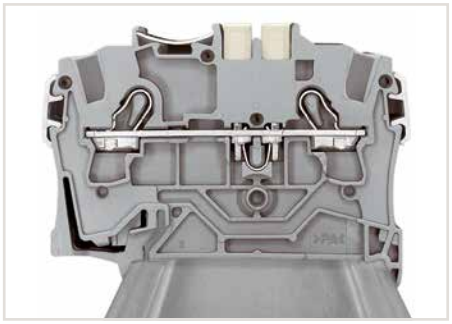

The smart feature:
The integrated sockets can be used for:
- Jumpers
- Test plug adapters and testing taps
- Preharnessed plugs for subassembly connections

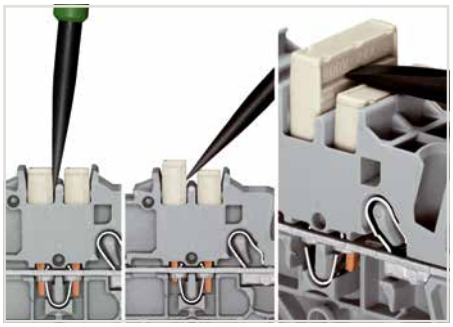

Removing a push-in type jumper bar.
Insert the operating tool between the jumper and partition wall of the dual jumper slots, then lift up the jumper. Place the operating tool in the center of jumpers up to five contacts (see above), or alternately on both sides for jumpers with more than five contacts.



Custom push-in type jumper bars are created by breaking off jumper contacts.
500 V
300 V

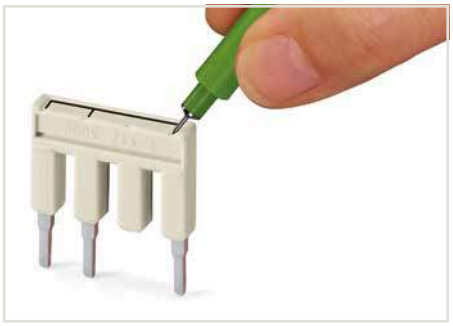

Marking a push-in type jumper bar using a felt-tip pen.



Stepping down via push-in type jumper bar.
Commoning via open terminal side with end plate allows jumpering over two cross-section sizes for 16 mm² (6 AWG) and 10 mm² (8 AWG) and one cross-section size for 6/4/2.5 mm² (10/12/14 AWG). An example: from 16 mm² (6 AWG) to 6 mm² (10 AWG) (see illustration above) or from 10 mm² (8 AWG) to 4 mm² (12 AWG).

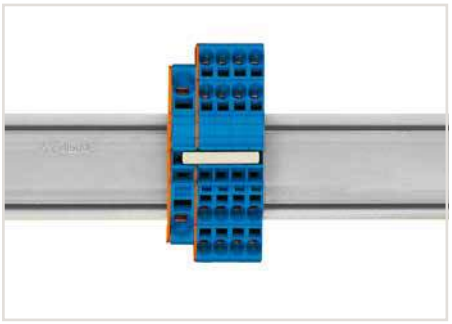

Stepping down via push-in type jumper bar.
Commoning via closed terminal side with end plate allows jumpering over two cross-section sizes, e.g., from 16 mm² (6 AWG) to 6 mm² (10 AWG) or from 6 mm² (10 AWG) to 2.5 mm² (14 AWG) (see illustration above).



An application example: colored push-in type jumper bars are used with sensor terminal blocks.

TOPJOB® S
Separators for Ex e/Ex Applications
Installation

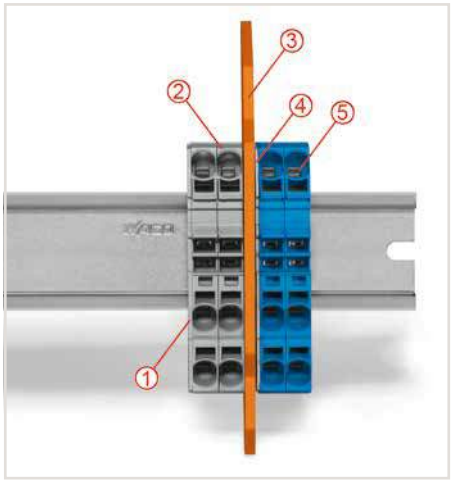

Separator located between Ex e II and Ex i terminal strip
① End plate
② Ex e II terminal blocks
③ Separator for Ex e/Ex i applications
④ End plate
⑤ Ex i terminal blocks

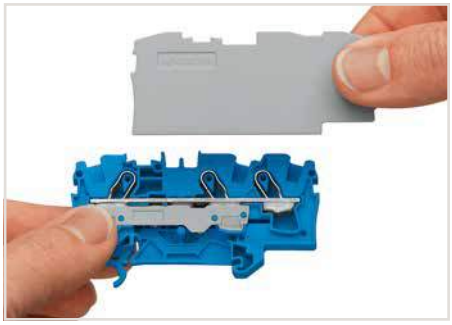

Separator for Ex e/Ex applications
An end plate must be applied to the terminal block located directly behind an Ex e/Ex i separator plate.

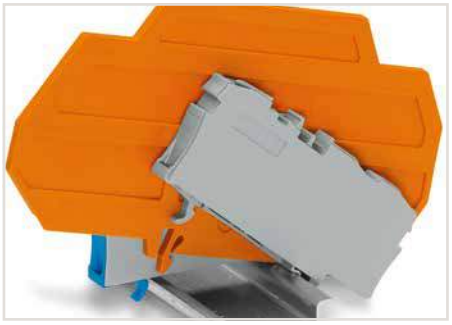

Ex e II/Ex i terminal strip
Notice:
The movable feet of terminal blocks and separator plates must face the same direction.



Example of marking (rear):
The embossed details on the terminal blocks show the manufacturer's name, the series no., the type of protection Ex e II, the approval no., the approval data and the name of the test authority.

TOPJOB® S
Angle-Type Rail-Mount Terminal Blocks
Installation

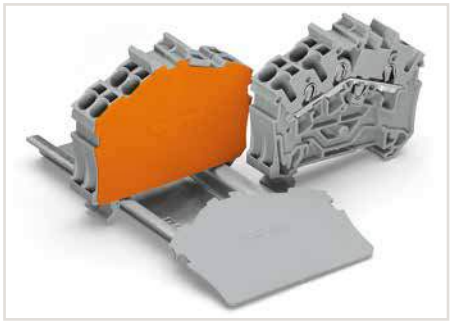

An end plate must be applied when changing from a 3-conductor terminal block to a 4-conductor terminal block (angled type) and vice versa.

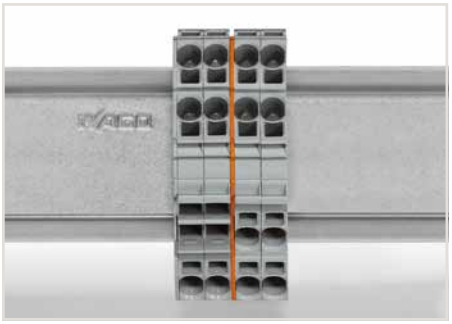

With continuous terminal strips, an end plate must be used when changing from 3- to 4-conductor terminal blocks.

TOPJOB® S
Through/Ground Conductor/Ex and Double-Potential Terminal Blocks
1 (1.5) mm², 2000 Series

1

0.14 … 1 (1.5) mm² ❶	24 … 16 AWG
800 V/8 kV/3 ❷	600 V, 10 A
I_N 13.5 A (18 A)	600 V, 10 A

Terminal block width 3.5 mm / 0.138 inch
9 … 11 mm / 0.35 … 0.43 inch

0.14 … 1 (1.5) mm² ❶	24 … 16 AWG
800 V/8 kV/3 ❷	600 V, 10 A
I_N 13.5 A (18 A)	600 V, 10 A

Terminal block width 3.5 mm / 0.138 inch
9 … 11 mm / 0.35 … 0.43 inch

0.14 … 1 (1.5) mm² ❶	24 … 16 AWG
800 V/8 kV/3 ❷	600 V, 10 A
I_N 13.5 A (18 A)	600 V, 10 A

Terminal block width 3.5 mm / 0.138 inch
9 … 11 mm / 0.35 … 0.43 inch

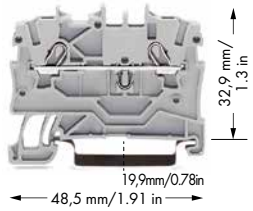

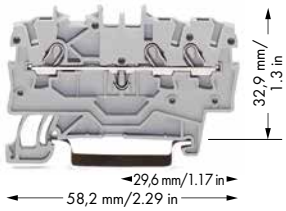

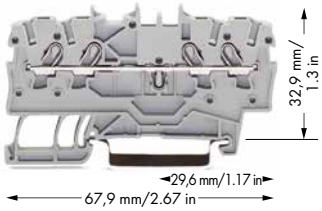

	Item No.	Pack. Unit
2-conductor through terminal block		
gray	**2000-1201** ❹	100
blue	**2000-1204** ❸ ❹	100
orange	**2000-1202** ❹	100
red	**2000-1203** ❹	100
black	**2000-1205** ❹	100
yellow	**2000-1206** ❹	100
2-conductor ground terminal block		
green-yellow	**2000-1207** ❹	100

	Item No.	Pack. Unit
3-conductor through terminal block		
gray	**2000-1301** ❹	100
blue	**2000-1304** ❸ ❹	100
orange	**2000-1302** ❹	100
red	**2000-1303** ❹	100
black	**2000-1305** ❹	100
yellow	**2000-1306** ❹	100
3-conductor ground terminal block		
green-yellow	**2000-1307** ❹	100

	Item No.	Pack. Unit
4-conductor through terminal block		
gray	**2000-1401** ❹	100
blue	**2000-1404** ❸ ❹	100
orange	**2000-1402** ❹	100
red	**2000-1403** ❹	100
black	**2000-1405** ❹	100
yellow	**2000-1406** ❹	100
4-conductor ground terminal block		
green-yellow	**2000-1407** ❹	100

Item-Specific Accessories

End and intermediate plate, 0.7 mm thick



orange	**2000-1292**	100 (4x25)
gray	**2000-1291**	100 (4x25)

Separator for Ex e/Ex i applications, orange, 3 mm thick

❺ 

90 mm	**209-190**	50 (2x25)
120 mm	**209-191**	50 (2x25)

Item-Specific Accessories

End and intermediate plate, 0.7 mm thick



orange	**2000-1392**	100 (4x25)
gray	**2000-1391**	100 (4x25)

Separator for Ex e/Ex i applications, orange, 3 mm thick

❺ 

120 mm	**209-191**	50 (2x25)

Item-Specific Accessories

End and intermediate plate, 0.7 mm thick



orange	**2000-1492**	100 (4x25)
gray	**2000-1491**	100 (4x25)

Separator for Ex e/Ex i applications, orange, 3 mm thick

❺ 

120 mm	**209-191**	50 (2x25)

2000 Series Accessories

Appropriate marking systems: WMB/WMB Inline/Marking strips
(see Section 13)

Push-in type jumper bar, insulated, I_N 14 A, light gray

❺ 

2-way	**2000-402**	200 (8x25)
3-way	**2000-403**	200 (8x25)
4-way	**2000-404**	200 (8x25)
5-way	**2000-405**	100 (4x25)
6-way	**2000-406**	100 (4x25)
7-way	**2000-407**	100 (4x25)
8-way	**2000-408**	100 (4x25)
9-way	**2000-409**	100 (4x25)
10-way	**2000-410**	100 (4x25)

Push-in type jumper bar, insulated, I_N 14 A, light gray



from 1 to 3	**2000-433**	200 (8x25)
from 1 to 4	**2000-434**	200 (8x25)
from 1 to 5	**2000-435**	100 (4x25)
from 1 to 6	**2000-436**	100 (4x25)
from 1 to 7	**2000-437**	100 (4x25)
from 1 to 8	**2000-438**	100 (4x25)
from 1 to 9	**2000-439**	100 (4x25)
from 1 to 10	**2000-440**	100 (4x25)

Protective warning marker, with black high-voltage symbol, for 5 terminal blocks



yellow	**2000-115**	100 (4x25)

Delta jumper, insulated, I_N = I_N terminal block, light gray

❺ 

1-2 3-4 5-6	**2000-406/020-000**	100 (4x25)

Star point jumper, insulated, I_N = I_N terminal block, light gray

❺ 

1-3-5	**2000-405/011-000**	100 (4x25)

Push-in type wire jumper, insulated, wire size 0.75 mm², I_N 9 A

❺ 

L = 60 mm	**2009-402**	100 (10x10)
L = 110 mm	**2009-404**	100 (10x10)
L = 250 mm	**2009-406**	100 (10x10)

Modular TOPJOB® S connector, snaps together, for jumper contact slot, Terminal block width: 5 mm / 0.197 inch

❺ 

gray	**2000-511**	100 (4x25)

Modular TOPJOB® S connector, snaps together, for jumper contact slot

❺ 

gray	**2000-510**	100 (4x25)

Spacer module, snaps together, bridges commoned terminal blocks



gray	**2000-549**	100 (4x25)

End plate, for modular TOPJOB® S connector, 1.5 mm thick



gray	**2002-541**	100 (4x25)

Test plug adapter, for 4 mm Ø test plug



gray	**2009-174**	100 (4x25)

Banana plug, for 4 mm socket diameter, color mixed, 10 x

❺ 

orange, white, black, blue, yellow	**215-111**	50

Testing tap, for max. 2.5 mm²



gray	**2009-182**	100 (4x25)

Overview of certification organizations, see page 654

0.14 … 1 (1.5) mm² ❶ | 24 … 16 AWG
800 V/8 kV/3 ❷
I_N 13.5 A (18 A)

Terminal block width 3.5 mm / 0.138 inch
9 … 11 mm / 0.35 … 0.43 inch

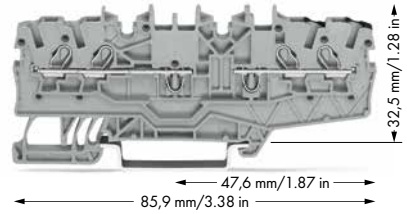

❶ Conductor range: 0.14 … 1.5 mm² "s + f-st"; Push-in termination: 0.5 … 1.5 mm² "s" and 0.5 … 0.75 mm² "insulated ferrule, 10 mm"

❷ 800 V = rated voltage
8 kV = rated surge voltage
3 = pollution degree
(see Section 14)

❸ Suitable for Ex i applications

❹ Suitable for Ex e II applications
550 V, 13 A
Jumper 12 A
(see Section 14)

❺ See application notes for:
Separator for Ex e/Ex i applications, page 37
Colored push-in type jumper bar, page 134
Delta jumper, page 135
Star point jumper, page 135
Push-in type wire jumper, page 138
TOPJOB® S connector, page 128
Banana plug, page 330

	Item No.	Pack. Unit
Double-potential terminal block, both potentials can be commoned		
gray	**2000-2141**	50

Item-Specific Accessories

End and intermediate plate, 0.7 mm thick			
	orange	**2000-2196**	100 (4x25)
	gray	**2000-2195**	100 (4x25)
Test plug, with 500 mm cable, 2 mm Ø, max. 42 V			
	red	**210-136**	50
Test plug, with 500 mm cable, 2.3 mm Ø, max. 42 V			
	yellow	**210-137**	50
WMB Inline, plain, 2,300 WMB markers (3.5 mm) per reel			
	white	**2009-113**	1
WMB Multi marking system, white, 10 strips with 10 markers per card, for 3.5 mm terminal block width			
	plain	**793-3501**	5
Marking strip, plain, 11 mm wide, 50 m reel			
	white	**2009-110**	1

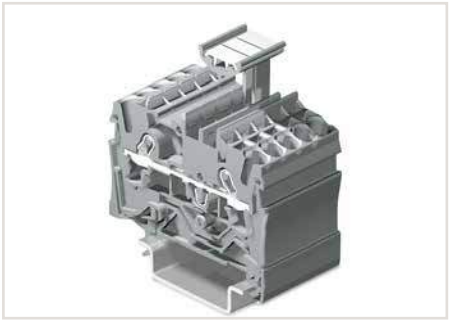

TOPJOB® S group marker carrier equipped with WMB Multi marking system.
Suitable for all 2000 … 2016 Series TOPJOB® S rail-mount terminal blocks
Do not use on an end plate!

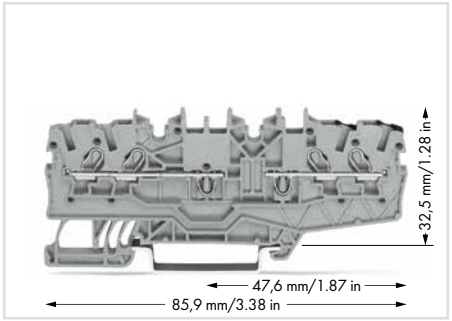

Double-potential terminal blocks are space savers. Two independent feedthrough circuits are placed in one insulated housing on one level in just 3.5 mm. This achieves a width of just 1.75 mm/0.069 inch versus standard through terminal blocks.
Input and output contacts of one circuit are placed on the same side of the terminal block. Both circuits can be individually marked according to input and output.



Standard and quick marking options:
Three marker slots are available for both individual markers and marking strips.

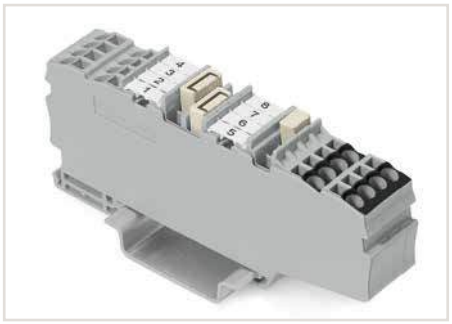

Standard and fast marking options:
Four marker slots (double-potential terminal blocks) are available for both individual markers and marking strips

TOPJOB® S
Through/Ground Conductor/Shield and Ex Terminal Blocks
1.5 (2.5) mm², 2001 Series

1

0.25 … 1.5 (2.5) mm² ❶	22 … 14 AWG
800 V/8 kV/3 ❷	600 V, 15 A
I_N 18 A (24 A)	600 V, 15 A

Terminal block width 4.2 mm / 0.165 inch
9 … 11 mm / 0.35 … 0.43 inch

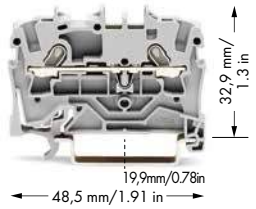

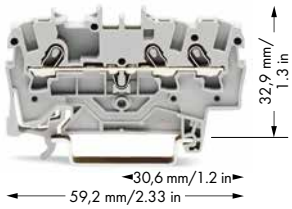

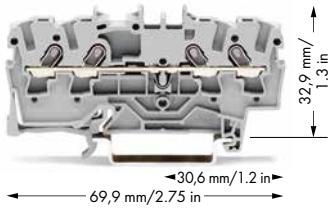

	Item No.	Pack. Unit
2-conductor through terminal block		
gray	**2001-1201** ❹	100
blue	**2001-1204** ❸ ❹	100
orange	**2001-1202** ❹	100
red	**2001-1203** ❹	100
black	**2001-1205** ❹	100
yellow	**2001-1206** ❹	100
2-conductor ground terminal block		
green-yellow	**2001-1207** ❹	100
2-conductor shield terminal block		
white	**2001-1208**	100
Other terminal blocks with the same profile:		
Diode	**2001-1211/1000-411** Page 110	

	Item No.	Pack. Unit
3-conductor through terminal block		
gray	**2001-1301** ❹	100
blue	**2001-1304** ❸ ❹	100
orange	**2001-1302** ❹	100
red	**2001-1303** ❹	100
black	**2001-1305** ❹	100
yellow	**2001-1306** ❹	100
3-conductor ground terminal block		
green-yellow	**2001-1307** ❹	100
3-conductor shield terminal block		
white	**2001-1308**	100
Other terminal blocks with the same profile:		
Diode	**2001-1311/1000-411** Page 110	
LED	**2001-1321/1000-434** Page 110	

	Item No.	Pack. Unit
4-conductor through terminal block		
gray	**2001-1401** ❹	100
blue	**2001-1404** ❸ ❹	100
orange	**2001-1402** ❹	100
red	**2001-1403** ❹	100
black	**2001-1405** ❹	100
yellow	**2001-1406** ❹	100
4-conductor ground terminal block		
green-yellow	**2001-1407** ❹	100
4-conductor shield terminal block		
white	**2001-1408**	100
Other terminal blocks with the same profile:		
Diode	**2001-1411/1000-411** Page 110	
LED	**2001-1421/1000-434** Page 110	
Double-potential	**2001-1441** Page 31	

Item-Specific Accessories

End and intermediate plate, 0.8 mm thick

orange	**2002-1292**	100 (4x25)
gray	**2002-1291**	100 (4x25)

Separator, oversized, 2 mm thick

orange	**2002-1294**	100 (4x25)
gray	**2002-1293**	100 (4x25)

Separator for Ex e/Ex i applications, orange, 3 mm thick ❺

90 mm	**209-190**	50 (2x25)
120 mm	**209-191**	50 (2x25)

Item-Specific Accessories

End and intermediate plate, 0.8 mm thick

orange	**2002-1392**	100 (4x25)
gray	**2002-1391**	100 (4x25)

Separator, oversized, 2 mm thick

orange	**2002-1394**	100 (4x25)
gray	**2002-1393**	100 (4x25)

Separator for Ex e/Ex i applications, orange, 3 mm thick ❺

120 mm	**209-191**	50 (2x25)

Item-Specific Accessories

End and intermediate plate, 0.8 mm thick

orange	**2002-1492**	100 (4x25)
gray	**2002-1491**	100 (4x25)

Separator, oversized, 2 mm thick

orange	**2002-1494**	100 (4x25)
gray	**2002-1493**	100 (4x25)

Separator for Ex e/Ex i applications, orange, 3 mm thick ❺

120 mm	**209-191**	50 (2x25)

2001 Series Accessories

Appropriate marking systems: WMB/WMB Inline/Marking strips
(see Section 13)

Insulation stop, 5 pcs/strip, 0.25 … 0.5 mm²

light gray	**2001-171**	200 (8x25)

Step-down jumper, insulated, commons 6/4 mm² ❺

(10/12 AWG) to 4/2.5/1.5 mm²		
(12/14/16 AWG), I_N 32 A		
light gray	**2006-499**	50 (2x25)

Protective warning marker, with black high-voltage symbol, for 5 terminal blocks

yellow	**2001-115**	100 (4x25)

Push-in type jumper bar, insulated, I_N 18 A, light gray

2-way	**2001-402**	200 (8x25)
3-way	**2001-403**	200 (8x25)
4-way	**2001-404**	200 (8x25)
5-way	**2001-405**	100 (4x25)
6-way	**2001-406**	100 (4x25)
7-way	**2001-407**	100 (4x25)
8-way	**2001-408**	100 (4x25)
9-way	**2001-409**	100 (4x25)
10-way	**2001-410**	100 (4x25)

Push-in type jumper bar, insulated, I_N 18 A, light gray

from 1 to 3	**2001-433**	200 (8x25)
from 1 to 4	**2001-434**	200 (8x25)
from 1 to 5	**2001-435**	100 (4x25)
from 1 to 6	**2001-436**	100 (4x25)
from 1 to 7	**2001-437**	100 (4x25)
from 1 to 8	**2001-438**	100 (4x25)
from 1 to 9	**2001-439**	100 (4x25)
from 1 to 10	**2001-440**	100 (4x25)

Overview of certification organizations, see page 654

PUSH-IN CAGE CLAMP®

TOPJOB® S
Double-Potential Terminal Blocks
1.5 (2.5) mm², 2001 Series

❶ Conductor range: 0.25 … 2.5 mm² "s + f-st";
Push-in termination: 0.5 … 2.5 mm² "s"
and 0.75 … 1.5 mm²
"insulated ferrule, 12 mm"

❷ 800 V = rated voltage
8 kV = rated surge voltage
3 = pollution degree
(see Section 14)

❸ Suitable for Ex i applications

❹ Suitable for Ex e II applications
550 V, 17 A
Jumper 16 A
(see Section 14)

❺ See application notes for:
Separator for Ex e/Ex i applications, page 37
Step-down jumper, page 41
Delta jumper, page 135
Star point jumper, page 135
Push-in type wire jumper, page 138
TOPJOB® S connector, page 128
Banana plug, page 330

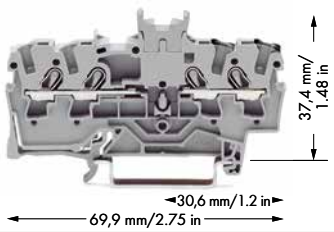

Double-potential terminal block with double marker slot centered on terminal block
gray 2001-1441
Packing unit: 100 pcs

Notice: These double potential terminal blocks cannot be commoned with push-in type jumper bars!
Double-potential terminal blocks save space. Two independent feedthrough circuits are placed in one insulated housing on one level in just 4.2 mm. This achieves a width of just 2.1 mm (0.083 inch) versus standard through terminal blocks. Input and output contacts of one circuit are placed on the same side of the terminal block. Both circuits can be individually marked according to input and output.

For technical data and accessories,
see www.wago.com

2001 Series Accessories

Appropriate marking systems: WMB/WMB Inline/Marking strips
(see Section 13)

Delta jumper, insulated, I_N = I_N terminal block, light gray ❺



1-2 3-4 5-6 **2001-406/020-000** 100 (4x25)

Star point jumper, insulated, I_N = I_N terminal block, light gray ❺



1-3-5 **2001-405/011-000** 100 (4x25)

Push-in type wire jumper, insulated, wire size 1.5 mm², I_N 18 A ❺



L = 60 mm **2009-412** 100 (10x10)
L = 110 mm **2009-414** 100 (10x10)
L = 250 mm **2009-416** 100 (10x10)

Modular TOPJOB® S connector, snaps together, for jumper contact slot ❺



gray **2001-511** 100 (4x25)

Spacer module, snaps together, bridges commoned terminal blocks



gray **2001-549** 100 (4x25)

End plate, for modular TOPJOB® S connector, 1.5 mm thick



gray **2002-541** 100 (4x25)

Test plug adapter, for 4 mm Ø test plug



gray **2009-174** 100 (4x25)

Banana plug, for 4 mm socket diameter, color mixed, 10 x orange, white, black, blue, yellow ❺



215-111 50

Testing tap, for max. 2.5 mm²



gray **2009-182** 100 (4x25)

Test plug, with 500 mm cable, 2 mm Ø, max. 42 V



red **210-136** 50

Test plug, with 500 mm cable, 2.3 mm Ø, max. 42 V



yellow **210-137** 50

WMB Inline, plain, 2,000 WMB markers (4 mm) per reel, 4 … 4.2 mm stretchable



white **2009-114** 1

WMB Multi marking system, white, 10 strips with 10 markers per card, 4 … 4.2 mm stretchable

plain **793-4501** 5

WMB Multi marking system, white, 10 strips with 10 markers per card, 4 … 4.2 mm stretchable



yellow	**793-4501/000-002**	
red	**793-4501/000-005**	
blue	**793-4501/000-006**	
gray	**793-4501/000-007**	
orange	**793-4501/000-012**	
light green	**793-4501/000-017**	
green	**793-4501/000-023**	
violet	**793-4501/000-024**	

5

Marking strip, plain, 11 mm wide, 50 m reel



white **2009-110** 1

Screwless end stop, for DIN-35 rail, 6 mm wide



gray **249-116** 100 (4x25)

Screwless end stop, for DIN-35 rail, 10 mm wide



gray **249-117** 50 (2x25)

TOPJOB® S
Through/Ground Conductor/Shield and Ex Terminal Blocks
2.5 (4) mm², 2002 Series

1

0.25 … 2.5 (4) mm² ❶	22 … 12 AWG	
800 V/8 kV/3 ❷	600 V, 20 A	
I_N 24 A (32 A)	600 V, 20 A	
Terminal block width 5.2 mm / 0.205 inch		
10 … 12 mm / 0.39 … 0.47 inch		

0.25 … 2.5 (4) mm² ❶	22 … 12 AWG	
800 V/8 kV/3 ❷	600 V, 20 A	
I_N 24 A (32 A)	600 V, 20 A	
Terminal block width 5.2 mm / 0.205 inch		
10 … 12 mm / 0.39 … 0.47 inch		

0.25 … 2.5 (4) mm² ❶	22 … 12 AWG	
800 V/8 kV/3 ❷	600 V, 20 A	
I_N 24 A (32 A)	600 V, 20 A	
Terminal block width 5.2 mm / 0.205 inch		
10 … 12 mm / 0.39 … 0.47 inch		

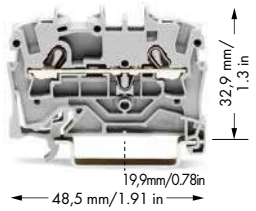

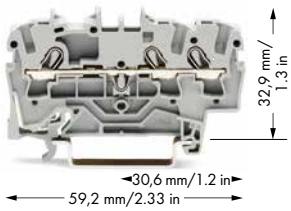

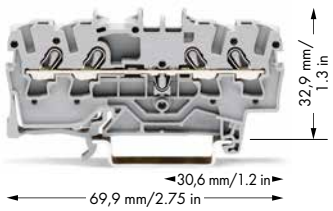

	Item No.	Pack. Unit
2-conductor through terminal block		
gray	**2002-1201** ❹	100
blue	**2002-1204** ❸ ❹	100
orange	**2002-1202** ❹	100
red	**2002-1203** ❹	100
black	**2002-1205** ❹	100
yellow	**2002-1206** ❹	100
2-conductor ground terminal block		
green-yellow	**2002-1207** ❹	100
2-conductor shield terminal block		
white	**2002-1208**	100
Other terminal blocks with the same profile:		
Diode	**2002-1211/1000-411** Page 112	

	Item No.	Pack. Unit
3-conductor through terminal block		
gray	**2002-1301** ❹	100
blue	**2002-1304** ❸ ❹	100
orange	**2002-1302** ❹	100
red	**2002-1303** ❹	100
black	**2002-1305** ❹	100
yellow	**2002-1306** ❹	100
3-conductor ground terminal block		
green-yellow	**2002-1307** ❹	100
3-conductor shield terminal block		
white	**2002-1308**	100
Other terminal blocks with the same profile:		
Diode	**2002-1311/1000-411** Page 112	
LED	**2002-1321/1000-434** Page 112	

	Item No.	Pack. Unit
4-conductor through terminal block		
gray	**2002-1401** ❹	100
blue	**2002-1404** ❸ ❹	100
orange	**2002-1402** ❹	100
red	**2002-1403** ❹	100
black	**2002-1405** ❹	100
yellow	**2002-1406** ❹	100
4-conductor ground terminal block		
green-yellow	**2002-1407** ❹	100
4-conductor shield terminal block		
white	**2002-1408**	100
Other terminal blocks with the same profile:		
Diode	**2002-1411/1000-411** Page 112	
LED	**2002-1421/1000-434** Page 112	
Double-potential	**2002-1441** Page 33	

Item-Specific Accessories

End and intermediate plate, 0.8 mm thick



orange	**2002-1292**	100 (4x25)
gray	**2002-1291**	100 (4x25)

Separator, oversized, 2 mm thick



orange	**2002-1294**	100 (4x25)
gray	**2002-1293**	100 (4x25)

Separator for Ex e/Ex i applications, orange, 3 mm thick

❺



90 mm	**209-190**	50 (2x25)
120 mm	**209-191**	50 (2x25)

Item-Specific Accessories

End and intermediate plate, 0.8 mm thick



orange	**2002-1392**	100 (4x25)
gray	**2002-1391**	100 (4x25)

Separator, oversized, 2 mm thick



orange	**2002-1394**	100 (4x25)
gray	**2002-1393**	100 (4x25)

Separator for Ex e/Ex i applications, orange, 3 mm thick

❺



120 mm	**209-191**	50 (2x25)

Item-Specific Accessories

End and intermediate plate, 0.8 mm thick



orange	**2002-1492**	100 (4x25)
gray	**2002-1491**	100 (4x25)

Separator, oversized, 2 mm thick



orange	**2002-1494**	100 (4x25)
gray	**2002-1493**	100 (4x25)

Separator for Ex e/Ex i applications, orange, 3 mm thick

❺



120 mm	**209-191**	50 (2x25)

2002 Series Accessories

Appropriate marking systems: WMB/WMB Inline/Marking strips (see Section 13)

Insulation stop, 5 pcs/strip, 0.25 … 0.5 mm²



light gray	**2002-171**	200 (8x25)

Insulation stop, 5 pcs/strip, 0.75 … 1 mm²



dark gray	**2002-172**	200 (8x25)

Protective warning marker, with black high-voltage symbol, for 5 terminal blocks



yellow	**2002-115**	100 (4x25)

Push-in type jumper bar, insulated, I_N 25 A, light gray

❺



2-way	**2002-402**	200 (8x25)
3-way	**2002-403**	200 (8x25)
4-way	**2002-404**	200 (8x25)
5-way	**2002-405**	100 (4x25)
6-way	**2002-406**	100 (4x25)
7-way	**2002-407**	100 (4x25)
8-way	**2002-408**	100 (4x25)
9-way	**2002-409**	100 (4x25)
10-way	**2002-410**	100 (4x25)

Push-in type jumper bar, insulated, I_N 25 A, light gray



from 1 to 3	**2002-433**	200 (8x25)
from 1 to 4	**2002-434**	200 (8x25)
from 1 to 5	**2002-435**	100 (4x25)
from 1 to 6	**2002-436**	100 (4x25)
from 1 to 7	**2002-437**	100 (4x25)
from 1 to 8	**2002-438**	100 (4x25)
from 1 to 9	**2002-439**	100 (4x25)
from 1 to 10	**2002-440**	100 (4x25)

Overview of certification organizations, see page 654

PUSH-IN CAGE CLAMP®

TOPJOB® S
Double-Potential Terminal Blocks
2.5 (4) mm², 2002 Series

❶ Conductor range: 0.25 ... 4 mm² "s + f-st";
Push-in termination: 0.75 ... 4 mm² "s"
and 0.75 ... 2.5 mm²
"insulated ferrule, 12 mm"

❷ 800 V = rated voltage
8 kV = rated surge voltage
3 = pollution degree
(see Section 14)

❸ Suitable for Ex i applications

❹ Suitable for Ex e II applications
550 V, 22 A
Jumper 20 A
(see Section 14)

❺ See application notes for:
Separator for Ex e/Ex i applications, page 37
Colored push-in type jumper bar, page 134
Staggered jumper, page 136
Delta jumper, page 135
Star point jumper, page 135
Step-down jumper, page 41
Adjacent jumper for continuous commoning, page 137
Push-in type wire jumper, page 138
TOPJOB® S connector, page 128
TOPJOB® S L-type test plug module, page 132

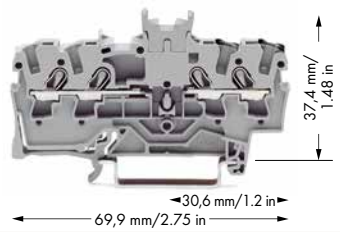

Double-potential terminal block with double marker slot centered on terminal block
gray 2002-1441
Packing unit: 100 pcs

Notice: These double potential terminal blocks cannot be commoned with push-in type jumper bars!
Double-potential terminal blocks save space. Two independent feedthrough circuits are placed in one insulated housing on one level in just 5.2 mm. This achieves a width of just 2.6 mm (0.103 inch) versus standard through terminal blocks. Input and output contacts of one circuit are placed on the same side of the terminal block. Both circuits can be individually marked according to input and output.

For technical data and accessories,
see www.wago.com

2002 Series Accessories

Appropriate marking systems: WMB/WMB Inline/Marking strips
(see Section 13)

Staggered jumper, insulated, I_N 25 A, light gray ❺



2-way	**2002-472**	100 (4x25)
3-way	**2002-473**	100 (4x25)
4-way	**2002-474**	100 (4x25)
5-way	**2002-475**	50 (2x25)
6-way	**2002-476**	50 (2x25)
7-way	**2002-477**	50 (2x25)
8-way	**2002-478**	50 (2x25)
9-way	**2002-479**	50 (2x25)
10-way	**2002-480**	50 (2x25)
11-way	**2002-481**	50 (2x25)
12-way	**2002-482**	50 (2x25)

Customized staggered jumper, insulated, with contact lugs broken off at the factory and circuit printing, I_N 25 A, light gray



1-3	**2002-473/011-000**	100 (4x25)
1-3-5	**2002-475/011-000**	
1-3-5-7	**2002-477/011-000**	
1-3-5-7-9	**2002-479/011-000**	
1-3-5-7-9-11	**2002-481/011-000**	50 (2x25)

Delta jumper, insulated, I_N = I_N terminal block, light gray ❺



1-2 3-4 5-6	**2002-406/020-000**	100 (4x25)

Star point jumper, insulated, I_N = I_N terminal block, light gray ❺



1-3-5	**2002-405/011-000**	100 (4x25)

Step-down jumper, insulated, commons 6/4 mm² (10/12 AWG) to 4/2.5/1.5 mm² (12/14/16 AWG), I_N 32 A ❺



light gray	**2006-499**	50 (2x25)

Adjacent jumper for continuous commoning, insulated, I_N 25 A, light gray ❺

2-way	**2002-400**	100 (4x25)

Adjacent jumper for continuous commoning, insulated, I_N 25 A, light gray ❺



1 to 3	**2002-423**	100 (4x25)

Push-in type wire jumper, insulated, I_N 18 A, wire size 1.5 mm² ❺



L = 60 mm	**2009-412**	100 (10x10)
L = 110 mm	**2009-414**	100 (10x10)
L = 250 mm	**2009-416**	100 (10x10)

Modular TOPJOB® S connector, snaps together, for jumper contact slot ❺



gray	**2002-511**	100 (4x25)

Spacer module, snaps together, bridges commoned terminal blocks



gray	**2002-549**	100 (4x25)

End plate, for modular TOPJOB® S connector, 1.5 mm thick



gray	**2002-541**	100 (4x25)

Test plug adapter, for 4 mm Ø test plug



gray	**2009-174**	100 (4x25)

Testing tap, for max. 2.5 mm²



gray	**2009-182**	100 (4x25)

TOPJOB® S L-type test plug module, snaps together ❺



gray	**2002-611**	100 (4x25)

TOPJOB® S L-type spacer module, snaps together,bridges commoned terminal blocks



gray	**2002-649**	100 (4x25)

End plate, for modular TOPJOB® S test plugs, 1.5 mm thick



gray	**2002-641**	100 (4x25)

WMB Multi marking system, white, 10 strips with 10 markers per card, 5 ... 5.2 mm stretchable

plain	**793-5501**	5

WMB Inline, plain, 1,500 WMB markers (5 mm) per reel, 5 ... 5.2 mm stretchable



white	**2009-115**	1

PUSH-IN CAGE CLAMP®

TOPJOB® S
Through/Ground Conductor/Shield and Ex Terminal Blocks
2.5 (4) mm², 2002 Series

1

0.25 ... 2.5 (4) mm² ❶	22 ... 12 AWG
800 V/8 kV/3 ❷	600 V, 20 A
I_N 24 A (32 A)	600 V, 20 A

Terminal block width 5.2 mm / 0.205 inch
10 ... 12 mm / 0.39 ... 0.47 inch

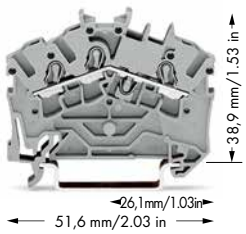

❶ Conductor range: 0.25 ... 4 mm² "s + f-st"; Push-in termination: 0.75 ... 4 mm² "s" and 0.75 ... 2.5 mm² "insulated ferrule, 12 mm"

❷ 800 V = rated voltage
8 kV = rated surge voltage
3 = pollution degree
(see Section 14)

❸ Suitable for Ex i applications

❹ Suitable for Ex e II applications
550 V, 22 A
Jumper 20 A
(see Section 14)

❺ See application notes for:
Separator for Ex e/Ex i applications, page 37
Colored push-in type jumper bar, page 134
Adjacent jumper for continuous commoning, page 137
Delta jumper, page 135
Star point jumper, page 135
Staggered jumper, page 136
Push-in type wire jumper, page 138
TOPJOB® S connector, page 128
TOPJOB® S L-type test plug module, page 132
Marker carrier, page 143

Item No.		Pack. Unit
3-conductor through terminal block		
gray	2002-6301 ❹	100
blue	2002-6304 ❸ ❹	100
orange	2002-6302 ❹	100
red	2002-6303 ❹	100
black	2002-6305 ❹	100
yellow	2002-6306 ❹	100
3-conductor ground terminal block		
green-yellow	2002-6307 ❹	100
3-conductor shield terminal block		
white	2002-6308	100

2002 Series Accessories

Appropriate marking systems: WMB/WMB Inline/Marking strips (see Section 13)

End and intermediate plate, 0.8 mm thick
orange 2002-6392 100 (4x25)
gray 2002-6391 100 (4x25)

Separator for Ex e/Ex i applications, 3 mm thick, orange ❺
120 mm 209-191 50 (2x25)

Insulation stop, 5 pcs/strip, 0.25 ... 0.5 mm²
light gray 2002-171 200 (8x25)

Insulation stop, 5 pcs/strip, 0.75 ... 1 mm²
dark gray 2002-172 200 (8x25)

Push-in type jumper bar, insulated, I_N 25 A, light gray ❺

2-way	2002-402	200 (8x25)
3-way	2002-403	200 (8x25)
4-way	2002-404	200 (8x25)
5-way	2002-405	100 (4x25)
6-way	2002-406	100 (4x25)
7-way	2002-407	100 (4x25)
8-way	2002-408	100 (4x25)
9-way	2002-409	100 (4x25)
10-way	2002-410	100 (4x25)

Adjacent jumper for continuous commoning, insulated, I_N ❺
25 A, light gray
2-way 2002-400 100 (4x25)

Push-in type jumper bar, insulated, I_N 25 A, light gray

from 1 to 3	2002-433	200 (8x25)
from 1 to 4	2002-434	200 (8x25)
from 1 to 5	2002-435	100 (4x25)
from 1 to 6	2002-436	100 (4x25)
from 1 to 7	2002-437	100 (4x25)
from 1 to 8	2002-438	100 (4x25)
from 1 to 9	2002-439	100 (4x25)
from 1 to 10	2002-440	100 (4x25)

Delta jumper, insulated, I_N = I_N terminal block, light gray ❺
1-2 3-4 5-6 2002-406/020-000 100 (4x25)

Star point jumper, insulated, I_N = I_N terminal block, light ❺
gray
1-3-5 2002-405/011-000 100 (4x25)

Staggered jumper, insulated, I_N 25 A, light gray ❺

2-way	2002-472	100 (4x25)
3-way	2002-473	100 (4x25)
4-way	2002-474	100 (4x25)
5-way	2002-475	50 (2x25)
6-way	2002-476	50 (2x25)
7-way	2002-477	50 (2x25)
8-way	2002-478	50 (2x25)
9-way	2002-479	50 (2x25)
10-way	2002-480	50 (2x25)
11-way	2002-481	50 (2x25)
12-way	2002-482	50 (2x25)

Customized staggered jumper, insulated, with contact lugs broken off at the factory and circuit printing, I_N 25 A, light gray
1-3 2002-473/011-000 100 (4x25)
1-3-5 2002-475/011-000 50 (2x25)

Adjacent jumper for continuous commoning, insulated, I_N ❺
25 A, light gray
1 to 3 2002-423 100 (4x25)

Push-in type wire jumper, insulated, wire size 1.5 mm², I_N 18 A ❺

L = 60 mm	2009-412	100 (10x10)
L = 110 mm	2009-414	100 (10x10)
L = 250 mm	2009-416	100 (10x10)

Protective warning marker, with black high-voltage symbol, for 5 terminal blocks
yellow 2002-115 100 (4x25)

Modular TOPJOB® S connector, snaps together, for jumper ❺ **contact slot**
gray 2002-511 100 (4x25)

TOPJOB® S L-type test plug module, snaps together ❺
gray 2002-611 100 (4x25)

Test plug adapter, for 4 mm Ø test plug
gray 2009-174 100 (4x25)

Testing tap, for max. 2.5 mm²
gray 2009-182 100 (4x25)

WMB Inline, plain, 1,500 WMB markers (5 mm) per reel, 5 ... 5.2 mm stretchable
white 2009-115 1

WMB Multi marking system, white, 10 strips with 10 markers per card, 5 ... 5.2 mm stretchable
plain 793-5501 5

Marking strip, plain, 11 mm wide, 50 m reel
white 2009-110 1

TOPJOB® S group marker carrier, snap-on type for jumper slot, 5 mm wide
gray 2009-191 50 (2x25)

Marker carrier, for jumper slots 2002 Series, 5 mm wide ❺
gray 2002-161 100 (4x25)

Overview of certification organizations, see page 654

PUSH-IN CAGE CLAMP®

TOPJOB® S
Through/Ground Conductor and Ex Terminal Blocks
2.5 (4) mm², 2002 Series

0.25 ... 2.5 (4) mm² ❶	22 ... 12 AWG
800 V/8 kV/3 ❷	600 V, 20 A
I_N 24 A (32 A)	600 V, 20 A

Terminal block width 5.2 mm / 0.205 inch
10 ... 12 mm / 0.39 ... 0.47 inch

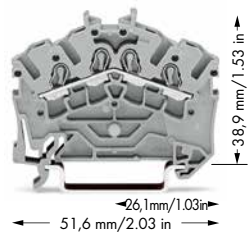

❶ Conductor range: 0.25 ... 4 mm² "s + f-st"; Push-in termination: 0.75 ... 4 mm² "s" and 0.75 ... 2.5 mm² "insulated ferrule, 12 mm"

❷ 800 V = rated voltage
8 kV = rated surge voltage
3 = pollution degree
(see Section 14)

❸ Suitable for Ex i applications

❹ Suitable for Ex e II applications
550 V, 22 A
Jumper 20 A
(see Section 14)

❺ See application notes for:
Separator for Ex e/Ex i applications, page 37

	Item No.	Pack. Unit
4-conductor through terminal block		
gray	2002-6401 ❹	100
blue	2002-6404 ❸ ❹	100
orange	2002-6402 ❹	100
red	2002-6403 ❹	100
black	2002-6405 ❹	100
yellow	2002-6406 ❹	100
4-conductor ground terminal block		
green-yellow	2002-6407 ❹	100

Notice:
These terminal blocks cannot be commoned with push-in type jumper bars.

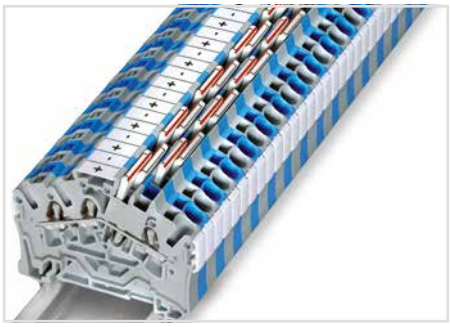

3- and 4-conductor terminal blocks (angled type)
WAGO's TOPJOB® S Rail-Mount Terminal Blocks have a 35-degree conductor entry angle permitting a very small bend radius and an extremely short wiring distance to the cable duct. These are space- and cost-saving solutions for switchgear and control cabinet applications that use the LSC wiring system from Lütze. The design allows cable duct to be placed very close to the terminal blocks, keeping its height relatively low.

2002 Series Accessories

Appropriate marking systems: WMB/WMB Inline/Marking strips (see Section 13)

End and intermediate plate, 0.8 mm thick



orange	2002-6392	100 (4x25)
gray	2002-6391	100 (4x25)

Separator for Ex e/Ex i applications, 3 mm thick, orange ❺



120 mm	209-191	50 (2x25)

Insulation stop, 5 pcs/strip, 0.25 ... 0.5 mm²



light gray	2002-171	200 (8x25)

Insulation stop, 5 pcs/strip, 0.75 ... 1 mm²



dark gray	2002-172	200 (8x25)

Protective warning marker, with black high-voltage symbol, for 5 terminal blocks



yellow	2002-115	100 (4x25)

WMB Inline, plain, 1,500 WMB markers (5 mm) per reel, 5 ... 5.2 mm stretchable



white	2009-115	1

Marking strip, plain, 11 mm wide, 50 m reel



white	2009-110	1

WMB Multi marking system, white, 10 strips with 10 markers per card, 5 ... 5.2 mm stretchable

plain	793-5501	5

WMB Multi marking system, white, 10 strips with 10 markers per card, 5 ... 5.2 mm stretchable



yellow	793-5501/000-002	
red	793-5501/000-005	
blue	793-5501/000-006	
gray	793-5501/000-007	
orange	793-5501/000-012	
light green	793-5501/000-017	
green	793-5501/000-023	
violet	793-5501/000-024	
		5

Screwless end stop, for DIN-35 rail, 6 mm wide



gray	249-116	100 (4x25)

Screwless end stop, for DIN-35 rail, 10 mm wide



gray	249-117	50 (2x25)

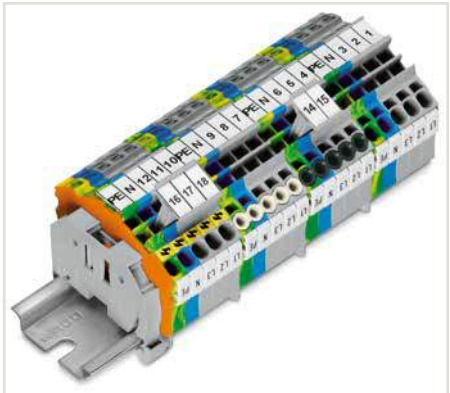

Product features:
- Push-in CAGE CLAMP® connection for all conductor types, with the additional benefit of solid, stranded and fine-stranded conductors with ferrules being simply pushed in
- Vibration-proof, fast, maintenance-free
- 3-conductor through and ground conductor terminal blocks equipped with a dual jumper slot
- 4-conductor terminal blocks permit potential multiplication – no additional jumpers or terminal blocks needed
- 3- and 4-conductor terminal blocks have the same dimensions
- An end plate must be applied when changing from a 3-conductor terminal block to a 4-conductor terminal block and vice versa.

TOPJOB® S
Through/Ground Conductor/Shield and Ex Terminal Blocks
4 (6) mm², 2004 Series

1

0.5 ... 4 (6) mm² ❶	20 ... 10 AWG	
800 V/8 kV/3 ❷	600 V, 30 A	
I_N 32 A (41 A)	600 V, 30 A	
Terminal block width 6.2 mm / 0.244 inch		
11 ... 13 mm / 0.43 ... 0.51 inch		

0.5 ... 4 (6) mm² ❶	20 ... 10 AWG	
800 V/8 kV/3 ❷	600 V, 30 A	
I_N 32 A (41 A)	600 V, 30 A	
Terminal block width 6.2 mm / 0.244 inch		
11 ... 13 mm / 0.43 ... 0.51 inch		

0.5 ... 4 (6) mm² ❶	20 ... 10 AWG	
800 V/8 kV/3 ❷	600 V, 30 A	
I_N 32 A (41 A)	600 V, 30 A	
Terminal block width 6.2 mm / 0.244 inch		
11 ... 13 mm / 0.43 ... 0.51 inch		

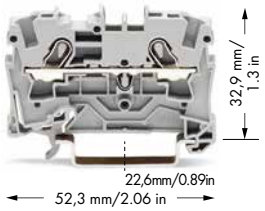

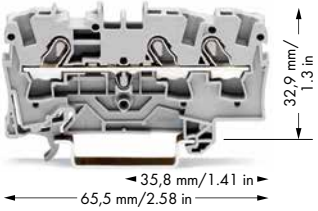

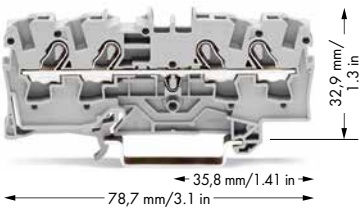

	Item No.	Pack. Unit
2-conductor through terminal block		
gray Ex	**2004-1201** ❹	50
blue Ex	**2004-1204** ❸ ❹	50
orange Ex	**2004-1202** ❹	50
red Ex	**2004-1203** ❹	50
black Ex	**2004-1205** ❹	50
yellow Ex	**2004-1206** ❹	50
2-conductor ground terminal block		
green-yellow Ex	**2004-1207** ❹	50
Other terminal blocks with the same profile:		
Diode	**2004-1211/1000-401** Page 114	

	Item No.	Pack. Unit
3-conductor through terminal block		
gray Ex	**2004-1301** ❹	50
blue Ex	**2004-1304** ❸ ❹	50
orange Ex	**2004-1302** ❹	50
red Ex	**2004-1303** ❹	50
black Ex	**2004-1305** ❹	50
yellow Ex	**2004-1306** ❹	50
3-conductor ground terminal block		
green-yellow Ex	**2004-1307** ❹	50
Other terminal blocks with the same profile:		
Diode	**2004-1311/1000-401** Page 114	

	Item No.	Pack. Unit
4-conductor through terminal block		
gray Ex	**2004-1401** ❹	50
blue Ex	**2004-1404** ❸ ❹	50
orange Ex	**2004-1402** ❹	50
red Ex	**2004-1403** ❹	50
black Ex	**2004-1405** ❹	50
yellow Ex	**2004-1406** ❹	50
4-conductor ground terminal block		
green-yellow Ex	**2004-1407** ❹	50
4-conductor shield terminal block		
white	**2004-1408**	50
Other terminal blocks with the same profile:		
Diode	**2004-1411/1000-401** Page 114	

Item-Specific Accessories

End and intermediate plate, 1 mm thick



orange	**2004-1292**	100 (4x25)
gray	**2004-1291**	100 (4x25)

Separator, oversized, 2 mm thick



orange	**2004-1294**	100 (4x25)
gray	**2004-1293**	100 (4x25)

Separator for Ex e/Ex i applications, 3 mm thick, orange



90 mm	**209-190**	50 (2x25)
120 mm	**209-191**	50 (2x25)

Item-Specific Accessories

End and intermediate plate, 1 mm thick



orange	**2004-1392**	100 (4x25)
gray	**2004-1391**	100 (4x25)

Separator, oversized, 2 mm thick



orange	**2004-1394**	100 (4x25)
gray	**2004-1393**	100 (4x25)

Separator for Ex e/Ex i applications, 3 mm thick, orange



120 mm	**209-191**	50 (2x25)

Item-Specific Accessories

End and intermediate plate, 1 mm thick



orange	**2004-1492**	100 (4x25)
gray	**2004-1491**	100 (4x25)

Separator, oversized, 2 mm thick



orange	**2004-1494**	100 (4x25)
gray	**2004-1493**	100 (4x25)

Separator for Ex e/Ex i applications, 3 mm thick, orange



120 mm	**209-191**	50 (2x25)

2004 Series Accessories

Appropriate marking systems: WMB/Marking strips (see Section 13)

Insulation stop, 5 pcs/strip, 0.25 ... 0.5 mm²



light gray	**2004-171**	200 (8x25)

Push-in type jumper bar, insulated, I_N 32 A, light gray



2-way	**2004-402**	200 (8x25)
3-way	**2004-403**	200 (8x25)
4-way	**2004-404**	100 (4x25)
5-way	**2004-405**	100 (4x25)
6-way	**2004-406**	100 (4x25)
7-way	**2004-407**	100 (4x25)
8-way	**2004-408**	100 (4x25)
9-way	**2004-409**	100 (4x25)
10-way	**2004-410**	100 (4x25)

Insulation stop, 5 pcs/strip, 0.75 ... 1 mm²



dark gray	**2004-172**	200 (8x25)

Push-in type jumper bar, insulated, I_N 32 A, light gray



from 1 to 3	**2004-433**	200 (8x25)
from 1 to 4	**2004-434**	200 (8x25)
from 1 to 5	**2004-435**	100 (4x25)
from 1 to 6	**2004-436**	100 (4x25)
from 1 to 7	**2004-437**	100 (4x25)
from 1 to 8	**2004-438**	100 (4x25)
from 1 to 9	**2004-439**	100 (4x25)
from 1 to 10	**2004-440**	100 (4x25)

Delta jumper, insulated, I_N = I_N terminal block, light gray

❺



1-2 3-4 5-6	**2004-406/020-000**	100 (4x25)

Star point jumper, insulated, I_N = I_N terminal block, light gray

❺



1-3-5	**2004-405/011-000**	100 (4x25)

Step-down jumper, insulated, commons 6/4 mm²

❺



(10/12 AWG) to 4/2.5/1.5 mm² (12/14/16 AWG), I_N 32 A		
light gray	**2006-499**	50 (2x25)

Protective warning marker, with black high-voltage symbol, for 5 terminal blocks



yellow	**2004-115**	100 (4x25)

PUSH-IN CAGE CLAMP®

TOPJOB® S
Terminal Blocks for Ex i or Ex e II Applications

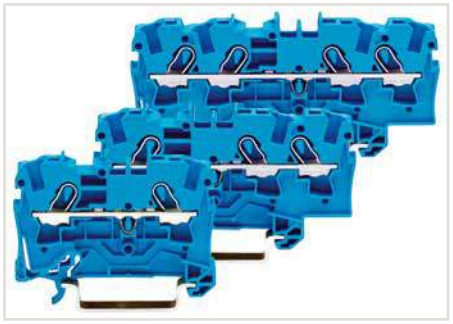

Through terminal blocks with a blue insulated housing are suitable for Ex i applications.



All through and ground conductor terminal blocks are suitable for Ex e II applications.

❶ Conductor range: 0.5 … 6 mm² "s + f-st";
Push-in termination: 1 … 6 mm² "s"
and 0.75 … 4 mm²
"insulated ferrule, 12 mm"

❷ 800 V = rated voltage
8 kV = rated surge voltage
3 = pollution degree
(see Section 14)

❸ Suitable for Ex i applications

❹ Suitable for Ex e II applications
550 V, 30 A
(see Section 14)

❺ See application notes for:
Delta jumper, page 135
Star point jumper, page 135
Step-down jumper, page 41
TOPJOB® S connector, page 130
Banana plug, page 330
TOPJOB® S group marker carrier, page 143

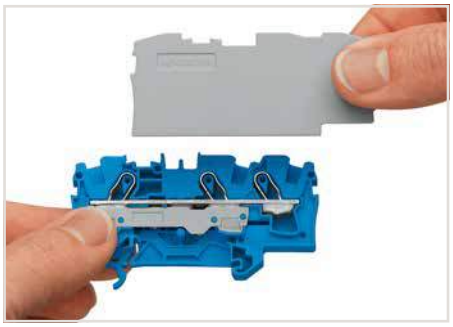

Separator for Ex e/Ex applications
An end plate must be applied to the terminal block located directly behind a separator for Ex e/Ex i applications.

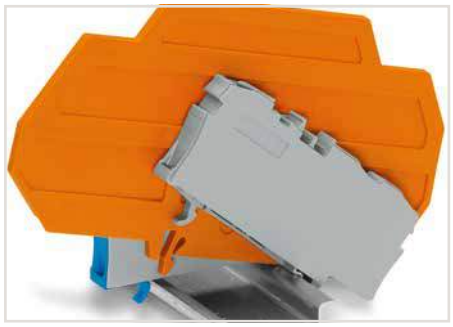

Ex e II/Ex i terminal strip
Notice:
The movable feet of terminal blocks and separator plates must face the same direction.

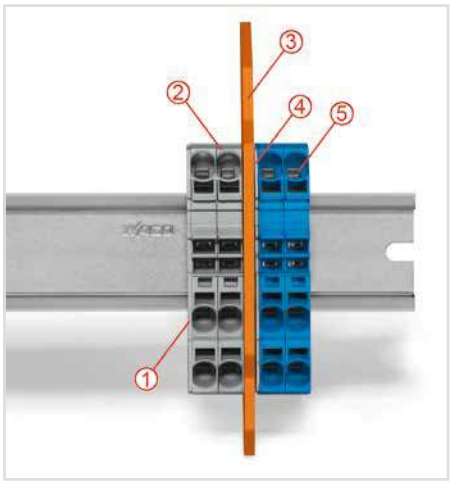

Separator located between Ex e II and Ex i terminal strip
① End plate
② Ex e II terminal blocks
③ Separator for Ex e/Ex i applications
④ End plate
⑤ Ex i terminal blocks



Example of marking (rear):
The embossed details on the terminal blocks show the manufacturer's name, the series no., the type of protection Ex e II, the approval no., the approval data and the name of the test authority.

2004 Series Accessories

Modular TOPJOB® S connector, snaps together, for jumper ❺ contact slot			
	gray	**2004-511**	100 (4x25)
Spacer module, snaps together, bridges commoned terminal blocks			
	gray	**2004-549**	100 (4x25)
End plate, for modular TOPJOB® S connector, 1.5 mm thick			
	gray	**2004-541**	100 (4x25)
Test plug adapter, for 4 mm Ø test plug			
	gray	**2009-174**	100 (4x25)
Banana plug, for 4 mm socket diameter, color mixed, 10 x ❺	orange, white, black, blue, yellow		
		215-111	50
Testing tap, for max. 2.5 mm²			
	gray	**2009-182**	100 (4x25)
Test plug, with 500 mm cable, 2 mm Ø, max. 42 V			
	red	**210-136**	50
Test plug, with 500 mm cable, 2.3 mm Ø, max. 42 V			
	yellow	**210-137**	50
WMB Multi marking system, white, 10 strips with 10 markers per card, 5 … 5.2 mm stretchable			
	plain	**793-5501**	5
Marking strip, plain, 11 mm wide, 50 m reel			
	white	**2009-110**	1
TOPJOB® S group marker carrier, snap-on type for jumper ❺ slot, 5 mm wide			
	gray	**2009-191**	50 (2x25)
Screwless end stop, for DIN-35 rail, 6 mm wide			
	gray	**249-116**	100 (4x25)

PUSH-IN CAGE CLAMP®

TOPJOB® S
Through/Ground Conductor/Shield and Ex Terminal Blocks
6 (10) mm² 2006 Series

1

0.5 … 6 (10) mm² ❶	20 … 8 AWG
800 V/8 kV/3 ❷	600 V, 50 A
I_N 41 A (57 A)	600 V, 50 A
Terminal block width 7.5 mm / 0.295 inch	
13 … 15 mm / 0.51 … 0.59 inch	

0.5 … 6 (10) mm² ❶	20 … 8 AWG
800 V/8 kV/3 ❷	600 V, 50 A
I_N 41 A (57 A)	600 V, 50 A
Terminal block width 7.5 mm / 0.295 inch	
13 … 15 mm / 0.51 … 0.59 inch	

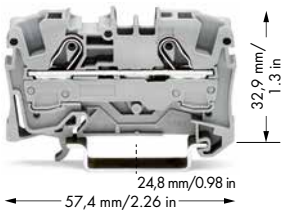

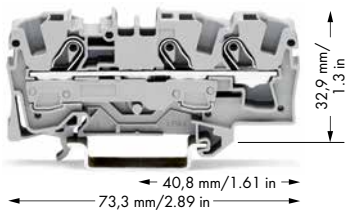

❶ Conductor range: 0.5 … 10 mm² "s + f-st"; Push-in termination: 1 … 10 mm² "s" and 1.5 … 6 mm² "insulated ferrule, 12 mm"

❷ 800 V = rated voltage
8 kV = rated surge voltage
3 = pollution degree
(see Section 14)

❸ Suitable for Ex i applications

❹ Suitable for Ex e II applications
550 V, 38 A for 2-conductor terminal blocks
550 V, 36 A for 3-conductor terminal blocks
Jumper 33 A
(see Section 14)

❺ See application notes for:
Separator for Ex e/Ex i applications, page 37
Star point jumper, page 135
Step-down jumper, page 41
TOPJOB® S connector, page 130

	Item No.	Pack. Unit
2-conductor through terminal block		
gray	**2006-1201** ❹	50
blue	**2006-1204** ❸ ❹	50
orange	**2006-1202** ❹	50
2-conductor ground terminal block		
green-yellow	**2006-1207** ❹	50
2-conductor shield terminal block		
white	**2006-1208** ❹	50

	Item No.	Pack. Unit
3-conductor through terminal block		
gray	**2006-1301** ❹	25
blue	**2006-1304** ❸ ❹	25
orange	**2006-1302** ❹	25
3-conductor ground terminal block		
green-yellow	**2006-1307** ❹	25



Cover (2006-191) seals unused conductor entry.

Item-Specific Accessories

End and intermediate plate, 1 mm thick			
	orange	**2006-1292**	100 (4x25)
	gray	**2006-1291**	100 (4x25)
Separator, oversized, 2 mm thick			
	orange	**2006-1294**	100 (4x25)
	gray	**2006-1293**	100 (4x25)

Item-Specific Accessories

End and intermediate plate, 1 mm thick			
	orange	**2006-1392**	100 (4x25)
	gray	**2006-1391**	100 (4x25)
Separator, oversized, 2 mm thick			
	orange	**2006-1394**	100 (4x25)
	gray	**2006-1393**	100 (4x25)

2006 Series Accessories

Appropriate marking systems: WMB/Marking strips
(see Section 13)

Separator for Ex e/Ex i applications, 3 mm thick, orange ❺			
	120 mm	**209-191**	50 (2x25)
Push-in type jumper bar, insulated, I_N 41 A, light gray			
	2-way	**2006-402**	50 (2x25)
	3-way	**2006-403**	50 (2x25)
	4-way	**2006-404**	50 (2x25)
	5-way	**2006-405**	50 (2x25)
Push-in type jumper bar, insulated, I_N 41 A, light gray			
	from 1 to 3	**2006-433**	50 (2x25)
	from 1 to 4	**2006-434**	50 (2x25)
	from 1 to 5	**2006-435**	50 (2x25)
Star point jumper, insulated, I_N = I_N terminal block, light gray ❺			
	1-3-5	**2006-405/011-000**	50 (2x25)

Step-down jumper, insulated, commons 6/4 mm² (10/12 AWG) to 4/2.5/1.5 mm² (12/14/16 AWG), I_N 32 A ❺			
	light gray	**2006-499**	50 (2x25)
Protective warning marker, with black high-voltage symbol, for 5 terminal blocks			
	yellow	**2006-115**	100 (4x25)
Lockout cap, for conductor entry and operating slot			
	gray	**2006-191**	25
Modular TOPJOB® S connector, snaps together, for jumper contact slot ❺			
	gray	**2006-511**	50 (2x25)
Test plug adapter, for 4 mm Ø test plug			
	gray	**2009-174**	100 (4x25)
WMB Multi marking system, white, 10 strips with 10 markers per card, 5 … 5.2 mm stretchable			
	plain	**793-5501**	5

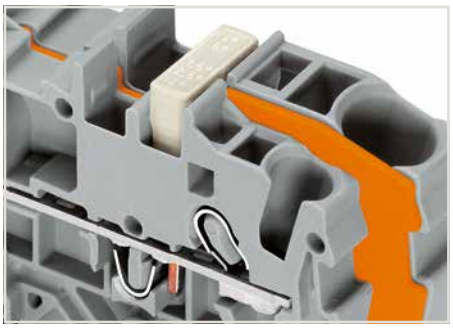

Commoning with step-down jumper.

Overview of certification organizations, see page 654

PUSH-IN CAGE CLAMP®

TOPJOB® S
Through/Ground Conductor/Shield and Ex Terminal Blocks
10 (16) mm² 2010 Series

0.5 … 10 (16) mm² ❶	**20 … 6 AWG**
800 V/8 kV/3 ❷	**600 V, 65 A**
I_N 57 A (76 A)	**600 V, 65 A**
Terminal block width 10 mm / 0.394 inch	
17 … 19 mm / 0.67 … 0.91 inch	

0.5 … 10 (16) mm² ❶	**20 … 6 AWG**
800 V/8 kV/3 ❷	**600 V, 65 A**
I_N 57 A (76 A)	**600 V, 65 A**
Terminal block width 10 mm / 0.394 inch	
17 … 19 mm / 0.67 … 0.91 inch	

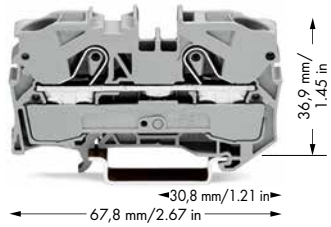

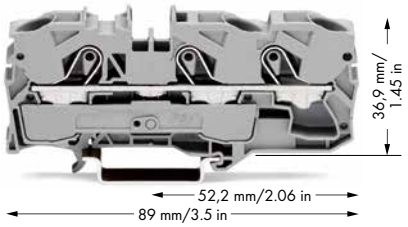

❶ Conductor range: 0.5 … 16 mm² "s + f-st"; Push-in termination: 2.5 … 16 mm² "s" and 2.5 … 10 mm² "insulated ferrule, 18 mm"

❷ 800 V = rated voltage
8 kV = rated surge voltage
3 = pollution degree
(see Section 14)

❸ Suitable for Ex i applications

❹ Suitable for Ex e II applications
550 V, 51 A for 2-conductor terminal blocks
550 V, 50 A for 3-conductor terminal blocks
(see Section 14)

❺ See application notes for:
Separator for Ex e/Ex i applications, page 37
Star point jumper, page 135
Step-down jumper, page 41
TOPJOB® S connector, page 130

	Item No.	Pack. Unit
2-conductor through terminal block		
gray	**2010-1201** ❹	25
blue	**2010-1204** ❸ ❹	25
orange	**2010-1202** ❹	25
2-conductor ground terminal block		
green-yellow	**2010-1207** ❹	25
2-conductor shield terminal block		
white	**2010-1208** ❹	25

	Item No.	Pack. Unit
3-conductor through terminal block		
gray	**2010-1301** ❹	25
blue	**2010-1304** ❸ ❹	25
orange	**2010-1302** ❹	25
3-conductor ground terminal block		
green-yellow	**2010-1307** ❹	25

Item-Specific Accessories

End and intermediate plate, 1 mm thick



orange	**2010-1292**	100 (4x25)
gray	**2010-1291**	100 (4x25)

Separator for Ex e/Ex i applications, 3 mm thick,

❺



orange		
120 mm	**209-191**	50 (2x25)

Item-Specific Accessories

End and intermediate plate, 1 mm thick



orange	**2010-1392**	100 (4x25)
gray	**2010-1391**	100 (4x25)

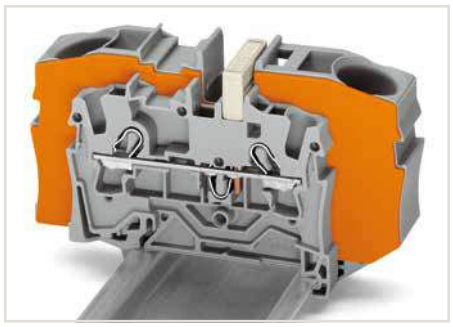

Commoning with step-down jumpers:
An end plate must be inserted between the terminal blocks to be commoned. Step-down jumpers (2016-499) common 16/10 mm² (16/8 AWG) terminal blocks (2016/2010 Series) with 10/6/4/2.5 mm² (8/10/12/14 AWG) terminal blocks (2010/2006/2004/2002 Series).
Step-down jumpers are simply pushed down for full insertion, similar to other push-in type jumper bars.
Note:
The total current of the outgoing circuits shall not exceed the nominal current of the step-down jumper/push-in type jumper bar.

2010 Series Accessories

Appropriate marking systems: WMB/Marking strips
(see Section 13)

Push-in type jumper bar, insulated, I_N 57 A, light gray



2-way	**2010-402**	50 (2x25)
3-way	**2010-403**	50 (2x25)
4-way	**2010-404**	50 (2x25)
5-way	**2010-405**	50 (2x25)

Push-in type jumper bar, insulated, I_N 57 A, light gray



from 1 to 3	**2010-433**	50 (2x25)
from 1 to 4	**2010-434**	50 (2x25)
from 1 to 5	**2010-435**	50 (2x25)

Star point jumper, insulated, I_N = I_N terminal block, light

❺



gray		
1-3-5	**2010-405/011-000**	
		50 (2x25)

Step-down jumper, insulated, commons 16/10 mm²

❺



(8/10 AWG) to 10/6/4/2.5 mm²		
(8/10/12/14 AWG), I_N 57 A		
light gray	**2016-499**	50 (2x25)

Protective warning marker, with black high-voltage symbol, for 5 terminal blocks



yellow	**2010-115**	50 (2x25)

Finger guard, touch-proof cover protects unused conductor entries



yellow	**2010-100**	100 (4x25)

Modular TOPJOB® S connector, snaps together, for jumper contact slot

❺



gray	**2010-511**	50 (2x25)

Test plug adapter, for 4 mm Ø test plug



gray	**2009-174**	100 (4x25)

WMB Multi marking system, white, 10 strips with 10 markers per card, 5 … 5.2 mm stretchable

plain	**793-5501**	5

Marking strip, plain, 11 mm wide, 50 m reel



white	**2009-110**	1

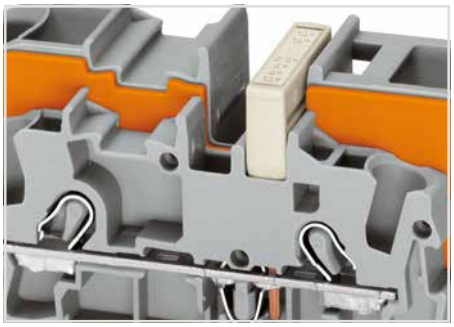

Commoning with a step-down jumper.

PUSH-IN CAGE CLAMP®

TOPJOB® S
Through/Ground Conductor/Shield and Ex Terminal Blocks
16 (25 "f-st") mm², 2016 Series

1

0.5 … 16 (25"f-st")mm² ❶	20 … 4 AWG
800 V/8 kV/3 ❷	600 V, 85 A
I_N 76 A (90 A)	600 V, 85 A
Terminal block width 12 mm / 0.472 inch	
18 … 20 mm / 0.71 … 0.79 inch	

0.5 … 16 (25"f-st")mm² ❶	20 … 4 AWG
800 V/8 kV/3 ❷	600 V, 85 A
I_N 76 A (90 A)	600 V, 85 A
Terminal block width 12 mm / 0.472 inch	
18 … 20 mm / 0.71 … 0.79 inch	

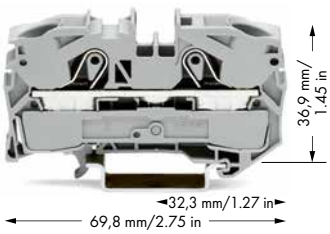

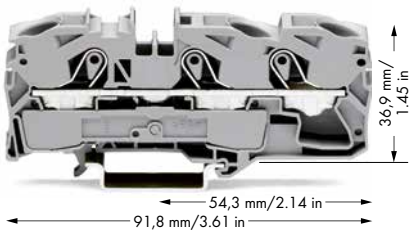

❶ Conductor range: 0.5 … 16 mm² "s + f-st", 25 mm² "f-st"; Push-in termination: 2.5 … 16 mm² "s" and 2.5 … 16 mm² "insulated ferrule, 18 mm"

❷ 800 V = rated voltage
8 kV = rated surge voltage
3 = pollution degree
(see Section 14)

❸ Suitable for Ex i applications

❹ Suitable for Ex e II applications
550 V, 70 A for 2-conductor terminal blocks
550 V, 67 A for 3-conductor terminal blocks
Jumper 65 A
(see Section 14)

❺ See application notes for:
Separator for Ex e/Ex i applications, page 37
Star point jumper, page 135
TOPJOB® S connector, page 131

	Item No.	Pack. Unit
2-conductor through terminal block		
gray	**2016-1201** ❹	20
blue	**2016-1204** ❸ ❹	20
orange	**2016-1202** ❹	20
2-conductor ground terminal block		
15 mm high DIN-35 rails shall be used for a current load higher than 76 A!		
green-yellow	**2016-1207** ❹	20
2-conductor shield terminal block		
15 mm high DIN-35 rails shall be used for a current load higher than 76 A!		
white	**2016-1208** ❹	20

	Item No.	Pack. Unit
3-conductor through terminal block		
gray	**2016-1301** ❹	20
blue	**2016-1304** ❸ ❹	20
orange	**2016-1302** ❹	20
3-conductor ground terminal block		
15 mm high DIN-35 rails shall be used for a current load higher than 76 A!		
green-yellow	**2016-1307** ❹	20

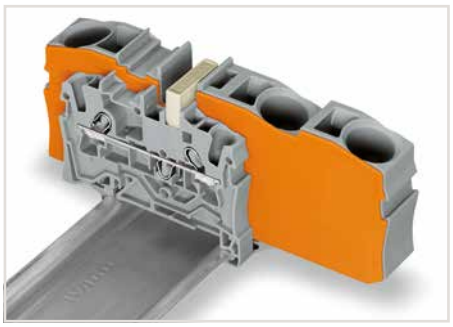

Step-down jumpers common terminal blocks of different sizes, without losing a conductor clamping point. This can be beneficial on long conductor runs where voltage drop can be a problem. A large conductor can be easily connected to smaller conductors at the distribution point. Commoning may be made in either direction using the special thin end plate to cover the open side. Additional through terminal blocks having a smaller cross-section may be commoned using push-in type jumper bars.

Item-Specific Accessories

End and intermediate plate, 1 mm thick



orange	**2016-1292**	100 (4x25)
gray	**2016-1291**	100 (4x25)

Separator for Ex e/Ex i applications, 3 mm thick, orange ❺



120 mm	**209-191**	50 (2x25)

Item-Specific Accessories

End and intermediate plate, 1 mm thick



orange	**2016-1392**	100 (4x25)
gray	**2016-1391**	100 (4x25)

2016 Series Accessories

Appropriate marking systems: WMB/Marking strips
(see Section 13)

Push-in type jumper bar, insulated, I_N 76 A, light gray



2-way	**2016-402**	50 (2x25)
3-way	**2016-403**	50 (2x25)
4-way	**2016-404**	50 (2x25)
5-way	**2016-405**	50 (2x25)

Push-in type jumper bar, insulated, I_N 76 A, light gray



from 1 to 3	**2016-433**	50 (2x25)
from 1 to 4	**2016-434**	50 (2x25)
from 1 to 5	**2016-435**	50 (2x25)

Star point jumper, insulated, I_N = I_N terminal block, light gray ❺



1-3-5	**2016-405/011-000**	50 (2x25)

Step-down jumper, insulated, commons 16/10 mm² (8/10 AWG) to 10/6/4/2.5 mm² (8/10/12/14 AWG), I_N 57 A



light gray	**2016-499**	50 (2x25)

Protective warning marker, with black high-voltage symbol, for 5 terminal blocks



yellow	**2016-115**	50 (2x25)

Modular TOPJOB® S connector, snaps together, for jumper contact slot ❺



gray	**2016-511**	50 (2x25)

Finger guard, touch-proof cover protects unused conductor entries



yellow	**2016-100**	100 (4x25)

Test plug adapter, for 4 mm Ø test plug



gray	**2009-174**	100 (4x25)

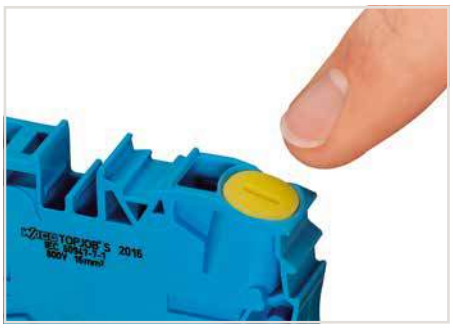

Finger guard seals unused conductor entry.

Overview of certification organizations, see page 654

TOPJOB® S
Step-Down Jumpers
Installation



Step-down jumpers (2006-499 and 2016-499)

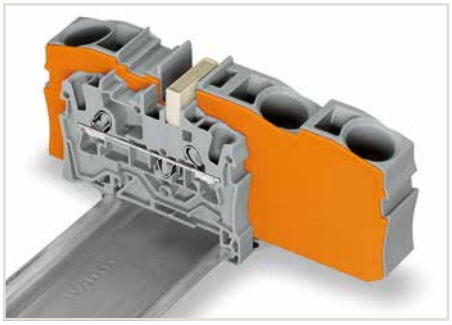

Step-down jumpers may common terminal blocks of different sizes, without losing a conductor clamping point. This can be beneficial on long conductor runs where voltage drops may be problematic. A large conductor can be easily connected to smaller conductors at the distribution point. Commoning may be made in either direction using the special thin end plate to cover the open side. Additional through terminal blocks having a smaller cross-section may be commoned using push-in type jumper bars.



Using step-down jumpers, an end plate must be inserted between the terminal blocks to be commoned.

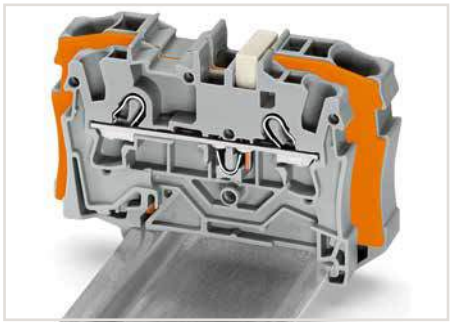

Step-down jumper (2006-499) commons 6/4 mm² (10/12 AWG) terminal blocks (2006/2004 Series) with 4/2.5/1.5 mm² (12/14/16 AWG) terminal blocks (2004/2002/2001 Series).



Step-down jumper (2016-499) commons 16/10 mm² (16/8 AWG) terminal blocks (2016/2010 Series) with 10/6/4/2.5 mm² (8/10/12/14 AWG) terminal blocks (2010/2006/2004/2002 Series).



Stepping down via push-in type jumper bar.
Commoning via open terminal side with end plate allows jumpering over two cross-section sizes for 16 mm² (6 AWG) and 10 mm² (8 AWG) and one cross-section size for 6/4/2.5 mm² (10/12/14 AWG). An example: from 16 mm² (6 AWG) to 6 mm² (10 AWG) (see illustration above) or from 10 mm² (8 AWG) to 4 mm² (12 AWG).

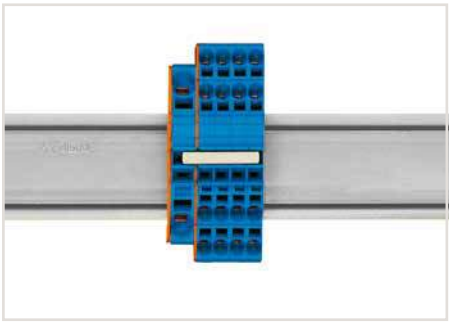

Stepping down via push-in type jumper bar.
Commoning via closed terminal side with end plate allows jumpering over two cross-section sizes. e.g., from 16 mm² (6 AWG) to 6 mm² (10 AWG) or from 6 mm² (10 AWG) to 2.5 mm² (14 AWG) (see illustration above).

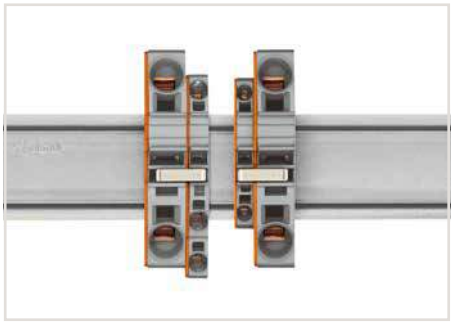

Note:
The total current of the outgoing circuits shall not exceed the nominal current of the step-down jumper/push-in type jumper bar.

TOPJOB® S
Double-Deck Terminal Blocks
1 (1.5) mm², 2000 Series

1

0.14 … 1 (1.5) mm² ❶ | 24 … 16 AWG 500 V/6 kV/3 ❷ | 600 V, 10 A I_N 13.5 A (16 A) Terminal block width 3.5 mm / 0.138 inch 9 … 11 mm / 0.35 … 0.43 inch	0.14 … 1 (1.5) mm² ❶ | 24 … 16 AWG 500 V/6 kV/3 ❷ | 600 V, 10 A I_N 13.5 A (16 A) Terminal block width 3.5 mm / 0.138 inch 9 … 11 mm / 0.35 … 0.43 inch	0.14 … 1 (1.5) mm² ❶ | 24 … 16 AWG 500 V/6 kV/3 ❷ | 600 V, 10 A I_N 13.5 A (16 A) Terminal block width 3.5 mm / 0.138 inch 9 … 11 mm / 0.35 … 0.43 inch

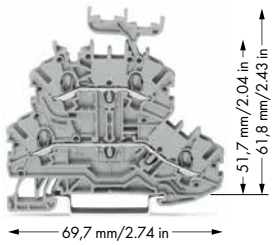

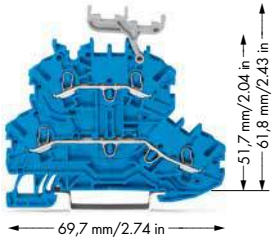

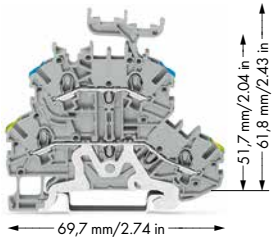

Item No.		Pack. Unit
Double-deck terminal block, through/through terminal block, with marker carrier, gray housing		
L/L	**2000-2231**	50
N/L	**2000-2232**	50
L/N	**2000-2233**	50
Double-deck terminal block, through/through terminal block, without marker carrier, gray housing		
L/L	**2000-2201**	50
N/L	**2000-2202**	50
L/N	**2000-2203**	50

Item No.		Pack. Unit
Double-deck terminal block, through/through terminal block, with marker carrier, blue housing		
N/N	**2000-2234**	50
Double-deck terminal block, through/through terminal block, without marker carrier, blue housing		
N/N	**2000-2204**	50

Item No.		Pack. Unit
Double-deck terminal block, ground conductor/through terminal block, with marker carrier, gray housing		
PE/N	**2000-2247**	50
PE/L	**2000-2257**	50
Double-deck terminal block, ground conductor/through terminal block, without marker carrier, gray housing		
PE/N	**2000-2217**	50
PE/L	**2000-2227**	50

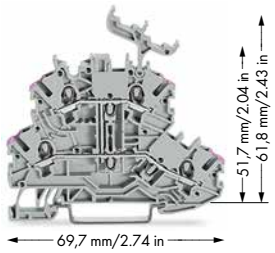

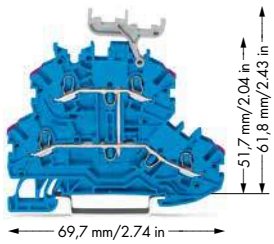

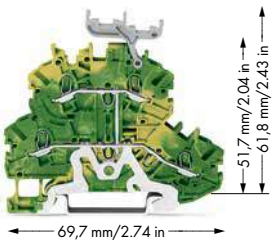

Item No.		Pack. Unit
Double-deck terminal block, 4-conductor through terminal block, with marker carrier, internally commoned, violet conductor entry, gray housing		
L	**2000-2238**	50
Double-deck terminal block, 4-conductor through terminal block, without marker carrier, internally commoned, violet conductor entry, gray housing		
L	**2000-2208**	50

Item No.		Pack. Unit
Double-deck terminal block, 4-conductor through terminal block, with marker carrier, internally commoned, violet conductor entry, blue housing		
N	**2000-2239**	50
Double-deck terminal block, 4-conductor through terminal block, without marker carrier, internally commoned, violet conductor entry, blue housing		
N	**2000-2209**	50

Item No.		Pack. Unit
Double-deck terminal block, 4-conductor ground terminal block, with marker carrier, internally commoned, green-yellow housing		
PE	**2000-2237**	50
Double-deck terminal block, 4-conductor ground terminal block, without marker carrier, internally commoned, green-yellow housing		
PE	**2000-2207**	50

Overview of certification organizations, see page 654

0.14 … 1 (1.5) mm² ❶ | **24 … 16 AWG**
500 V/6 kV/3 ❷ | **600 V, 10 A**
I_N 13.5 A (16 A)

Terminal block width 3.5 mm / 0.138 inch
9 … 11 mm / 0.35 … 0.43 inch

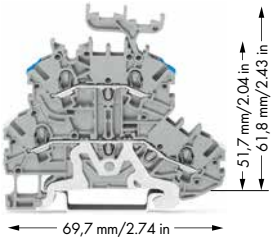

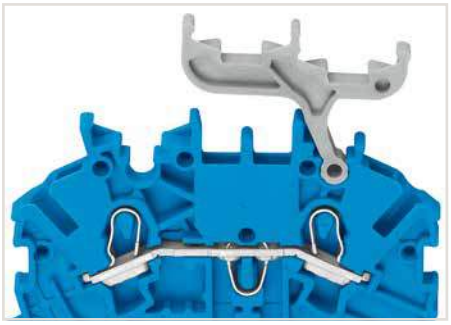

Double-Deck Terminal Blocks
A double-deck marker carrier (2000-121) can be retrofitted to double-deck terminal blocks without a marker carrier.

❶ Conductor range: 0.14 … 1.5 mm² "s + f-st"; Push-in termination: 0.5 … 1.5 mm² "s" and 0.5 … 0.75 mm² "insulated ferrule, 10 mm"

❷ 500 V = rated voltage
6 kV = rated surge voltage
3 = pollution degree
(see Section 14)

❸ See application notes for:
Colored push-in type jumper bar, page 134
Vertical jumper, page 139

	Item No.	Pack. Unit
Double-deck terminal block, shield conductor/through terminal block, with marker carrier, gray housing		
◯ Shield/N	**2000-2248**	50
◯ Shield/L	**2000-2258**	50
Double-deck terminal block, shield conductor/through terminal block, without marker carrier, gray housing		
◯ Shield/N	**2000-2218**	50
◯ Shield/L	**2000-2228**	50

2000 Series Accessories

Appropriate marking systems: WMB/WMB Inline/Marking strips (see Section 13)

End and intermediate plate, 0.7 mm thick

orange	**2000-2292**	25
gray	**2000-2291**	25

Push-in type jumper bar, insulated, I_N 14 A, light gray ❸



2-way	**2000-402**	200 (8x25)
3-way	**2000-403**	200 (8x25)
4-way	**2000-404**	200 (8x25)
5-way	**2000-405**	100 (4x25)
6-way	**2000-406**	100 (4x25)
7-way	**2000-407**	100 (4x25)
8-way	**2000-408**	100 (4x25)
9-way	**2000-409**	100 (4x25)
10-way	**2000-410**	100 (4x25)

Push-in type jumper bar, insulated, I_N 14 A, light gray



from 1 to 3	**2000-433**	200 (8x25)
from 1 to 4	**2000-434**	200 (8x25)
from 1 to 5	**2000-435**	100 (4x25)
from 1 to 6	**2000-436**	100 (4x25)
from 1 to 7	**2000-437**	100 (4x25)
from 1 to 8	**2000-438**	100 (4x25)
from 1 to 9	**2000-439**	100 (4x25)
from 1 to 10	**2000-440**	100 (4x25)

Double-deck vertical jumper, insulated, I_N 13.5 A ❸

light gray	**2000-492**	100 (4x25)

Protective warning marker, with black high-voltage symbol, for 5 terminal blocks



yellow	**2000-115**	100 (4x25)

Test plug adapter, for 4 mm Ø test plug



gray	**2009-174**	100 (4x25)

Banana plug, for 4 mm socket diameter, color mixed, 10 x



orange, white, black, blue, yellow	**215-111**	50

Testing tap, for max. 2.5 mm²



gray	**2009-182**	100 (4x25)

Double-deck marker carrier, pivoting



gray	**2000-121**	50 (2x25)

WMB Inline, plain, 2,300 WMB markers (3.5 mm) per reel



white	**2009-113**	1

WMB Multi marking system, white, 10 strips with 10 markers per card, for 3.5 mm terminal block width

plain	**793-3501**	5

Marking strip, plain, 11 mm wide, 50 m reel



white	**2009-110**	1

TOPJOB® S
Double-Deck Terminal Blocks with End Plate, 800 V
1 (1.5) mm², 2000 Series

1

0.14 … 1 (1.5) mm² ❶ | 24 … 16 AWG 800 V/8 kV/3 ❷ | 600 V, 10 A I_N 13.5 A (16 A) Terminal block width 4.2 mm / 0.165 inch 9 … 11 mm / 0.35 … 0.43 inch	0.14 … 1 (1.5) mm² ❶ | 24 … 16 AWG 800 V/8 kV/3 ❷ | 600 V, 10 A I_N 13.5 A (16 A) Terminal block width 4.2 mm / 0.165 inch 9 … 11 mm / 0.35 … 0.43 inch	0.14 … 1 (1.5) mm² ❶ | 24 … 16 AWG 800 V/8 kV/3 ❷ | 600 V, 10 A I_N 13.5 A (16 A) Terminal block width 4.2 mm / 0.165 inch 9 … 11 mm / 0.35 … 0.43 inch

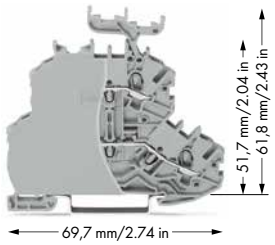

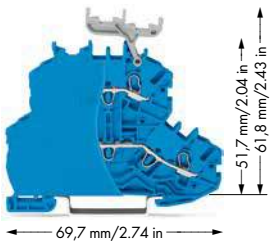

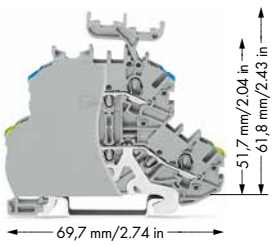

Item No.		Pack. Unit
Double-deck terminal block, through/through terminal block, with end plate, with marker carrier, gray housing		
○ L/L	**2000-2231/099-000**	50
○ N/L	**2000-2232/099-000**	50
○ L/N	**2000-2233/099-000**	50
Double-deck terminal block, through/through terminal block, with end plate, without marker carrier, gray housing		
○ L/L	**2000-2201/099-000**	50
○ N/L	**2000-2202/099-000**	50
○ L/N	**2000-2203/099-000**	50

Item No.		Pack. Unit
Double-deck terminal block, through/through terminal block, with end plate, with marker carrier, blue housing		
● N/N	**2000-2234/099-000**	50
Double-deck terminal block, through/through terminal block, with end plate, without marker carrier, blue housing		
● N/N	**2000-2204/099-000**	50

Item No.		Pack. Unit
Double-deck terminal block, ground conductor/through terminal block, with end plate, with marker carrier, gray housing		
○ PE/N	**2000-2247/099-000**	50
○ PE/L	**2000-2257/099-000**	50
Double-deck terminal block, ground conductor/through terminal block, with end plate, without marker carrier, gray housing		
○ PE/N	**2000-2217/099-000**	50
○ PE/L	**2000-2227/099-000**	50

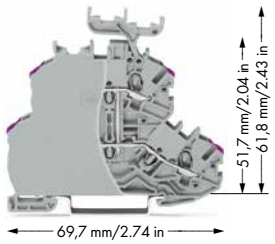

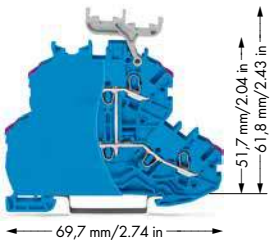

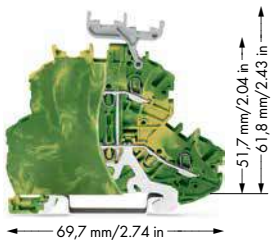

Item No.		Pack. Unit
Double-deck terminal block, 4-conductor through terminal block, with end plate, with marker carrier, internally commoned, violet conductor entry, gray housing		
○ L	**2000-2238/099-000**	50
Double-deck terminal block, 4-conductor through terminal block, with end plate, without marker carrier, internally commoned, violet conductor entry, gray housing		
○ L	**2000-2208/099-000**	50

Item No.		Pack. Unit
Double-deck terminal block, 4-conductor through terminal block, with end plate, with marker carrier, internally commoned, violet conductor entry, blue housing		
● N	**2000-2239/099-000**	50
Double-deck terminal block, 4-conductor through terminal block, with end plate, without marker carrier, internally commoned, violet conductor entry, blue housing		
● N	**2000-2209/099-000**	50

Item No.		Pack. Unit
Double-deck terminal block, 4-conductor ground terminal block, with end plate, with marker carrier, internally commoned, green-yellow housing		
◐ PE	**2000-2237/099-000**	50
Double-deck terminal block, 4-conductor ground terminal block, with end plate, without marker carrier, internally commoned, green-yellow housing		
◐ PE	**2000-2207/099-000**	50

Overview of certification organizations, see page 654

0.14 … 1 (1.5) mm² ❶ | **24 … 16 AWG**
800 V/8 kV/3 ❷ | **600 V, 10 A**
I_N 13.5 A (16 A)

Terminal block width 4.2 mm / 0.165 inch
9 … 11 mm / 0.35 … 0.43 inch

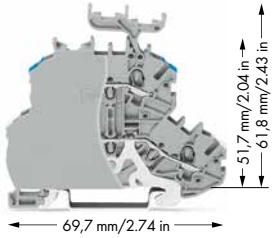



Double-Deck Terminal Blocks
A double-deck marker carrier (2000-121) can be retrofitted to double-deck terminal blocks without a marker carrier.

❶ Conductor range: 0.14 … 1.5 mm² "s + f-st"; Push-in termination: 0.5 … 1.5 mm² "s" and 0.5 … 0.75 mm² "insulated ferrule, 10 mm"

❷ 800 V = rated voltage
8 kV = rated surge voltage
3 = pollution degree
(see Section 14)

❸ See application notes for: Vertical jumper, page 139

	Item No.	Pack. Unit
Double-deck terminal block, shield conductor/through terminal block, with end plate, with marker carrier, gray housing		
Shield/N	**2000-2248/099-000**	50
Shield/L	**2000-2258/099-000**	50
Double-deck terminal block, shield conductor/through terminal block, with end plate, without marker carrier, gray housing		
Shield/N	**2000-2218/099-000**	50
Shield/L	**2000-2228/099-000**	50

2000 Series Accessories

Appropriate marking systems: WMB/WMB Inline/Marking strips (see Section 13)

End and intermediate plate, 0.7 mm thick



orange	**2000-2292**	25
gray	**2000-2291**	25

Push-in type jumper bar, insulated, I_N 18 A, light gray



2-way	**2001-402**	200 (8x25)
3-way	**2001-403**	200 (8x25)
4-way	**2001-404**	200 (8x25)
5-way	**2001-405**	100 (4x25)
6-way	**2001-406**	100 (4x25)
7-way	**2001-407**	100 (4x25)
8-way	**2001-408**	100 (4x25)
9-way	**2001-409**	100 (4x25)
10-way	**2001-410**	100 (4x25)

Push-in type jumper bar, insulated, I_N 18 A, light gray



from 1 to 3	**2001-433**	200 (8x25)
from 1 to 4	**2001-434**	200 (8x25)
from 1 to 5	**2001-435**	100 (4x25)
from 1 to 6	**2001-436**	100 (4x25)
from 1 to 7	**2001-437**	100 (4x25)
from 1 to 8	**2001-438**	100 (4x25)
from 1 to 9	**2001-439**	100 (4x25)
from 1 to 10	**2001-440**	100 (4x25)

Double-deck vertical jumper, insulated, I_N 13.5 A ❸

light gray	**2000-492**	100 (4x25)

Protective warning marker, with black high-voltage symbol, for 5 terminal blocks



yellow	**2001-115**	100 (4x25)

Test plug adapter, for 4 mm Ø test plug



gray	**2009-174**	100 (4x25)

Banana plug, for 4 mm socket diameter, color mixed, 10 x orange, white, black, blue, yellow



215-111	50

Testing tap, for max. 2.5 mm²



gray	**2009-182**	100 (4x25)

Double-deck marker carrier, pivoting



gray	**2000-121**	50 (2x25)

WMB Inline, plain, 2,000 WMB markers (4 mm) per reel, 4 … 4.2 mm stretchable



white	**2009-114**	1

WMB Multi marking system, white, 10 strips with 10 markers per card, 4 … 4.2 mm stretchable

plain	**793-4501**	5

WMB Multi marking system, white, 10 strips with 10 markers per card, 4 … 4.2 mm stretchable



yellow	**793-4501/000-002**	
red	**793-4501/000-005**	
blue	**793-4501/000-006**	
gray	**793-4501/000-007**	
orange	**793-4501/000-012**	
light green	**793-4501/000-017**	
green	**793-4501/000-023**	
violet	**793-4501/000-024**	
		5

Marking strip, plain, 11 mm wide, 50 m reel



white	**2009-110**	1

TOPJOB® S
Double-Deck Terminal Blocks
2.5 (4) mm², 2002 Series

1

0.25 … 2.5 (4) mm² ❶ 500 V/6 kV/3 ❷ I_N 24 A (28 A)	22 … 12 AWG 600 V, 20 A 600 V, 20 A	0.25 … 2.5 (4) mm² ❶ 500 V/6 kV/3 ❷ I_N 24 A (28 A)	22 … 12 AWG 600 V, 20 A 600 V, 20 A	0.25 … 2.5 (4) mm² ❶ 500 V/6 kV/3 ❷ I_N 24 A (28 A)	22 … 12 AWG 600 V, 20 A 600 V, 20 A
Terminal block width 5.2 mm / 0.205 inch 10 … 12 mm / 0.39 … 0.47 inch		Terminal block width 5.2 mm / 0.205 inch 10 … 12 mm / 0.39 … 0.47 inch		Terminal block width 5.2 mm / 0.205 inch 10 … 12 mm / 0.39 … 0.47 inch	

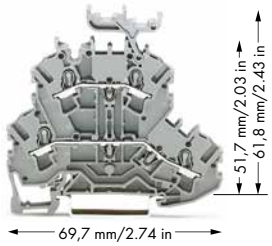

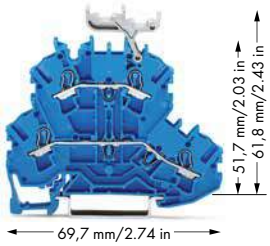

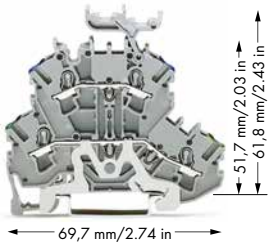

	Item No.	Pack. Unit
Double-deck terminal block, through/through terminal block, with marker carrier, gray housing		
L/L	**2002-2231** ❹	50
N/L	**2002-2232** ❹	50
L/N	**2002-2233** ❹	50
Double-deck terminal block, through/through terminal block, without marker carrier, gray housing		
L/L	**2002-2201** ❹	50
N/L	**2002-2202** ❹	50
L/N	**2002-2203** ❹	50
Other terminal blocks with the same profile:		
Diode	**2002-2211/1000-410**	Page 116
LED	**2002-2221/1000-434**	Page 116

	Item No.	Pack. Unit
Double-deck terminal block, through/through terminal block, with marker carrier, blue housing		
N/N	**2002-2234** ❸ ❹	50
Double-deck terminal block, through/through terminal block, without marker carrier, blue housing		
N/N	**2002-2204** ❸ ❹	50

	Item No.	Pack. Unit
Double-deck terminal block, ground conductor/through terminal block, with marker carrier, gray housing		
PE/N	**2002-2247** ❹	50
PE/L	**2002-2257** ❹	50
Double-deck terminal block, ground conductor/through terminal block, without marker carrier, gray housing		
PE/N	**2002-2217** ❹	50
PE/L	**2002-2227** ❹	50

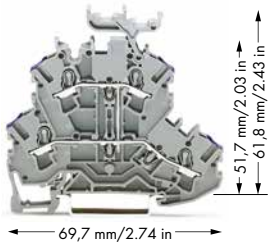

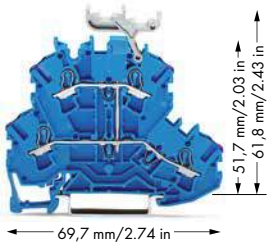

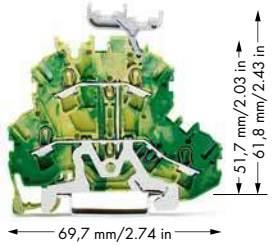

	Item No.	Pack. Unit
Double-deck terminal block, 4-conductor through terminal block, with marker carrier, internally commoned, violet conductor entry, gray housing		
L	**2002-2238** ❹	50
Double-deck terminal block, 4-conductor through terminal block, without marker carrier, internally commoned, violet conductor entry, gray housing		
L	**2002-2208** ❹	50

	Item No.	Pack. Unit
Double-deck terminal block, 4-conductor through terminal block, with marker carrier, internally commoned, violet conductor entry, blue housing		
N	**2002-2239** ❸ ❹	50
Double-deck terminal block, 4-conductor through terminal block, without marker carrier, internally commoned, violet conductor entry, blue housing		
N	**2002-2209** ❸ ❹	50

	Item No.	Pack. Unit
Double-deck terminal block, 4-conductor ground terminal block, with marker carrier, internally commoned, green-yellow housing		
PE	**2002-2237** ❹	50
Double-deck terminal block, 4-conductor ground terminal block, without marker carrier, internally commoned, green-yellow housing		
PE	**2002-2207** ❹	50

Overview of certification organizations, see page 654

0.25 ... 2.5 (4) mm² ❶	22 ... 12 AWG
500 V/6 kV/3 ❷	600 V, 20 A
I_N 24 A (28 A)	600 V, 20 A

Terminal block width 5.2 mm / 0.205 inch
10 ... 12 mm / 0.39 ... 0.47 inch

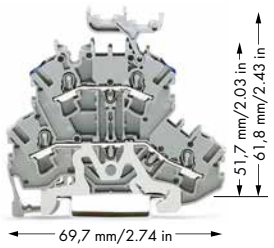

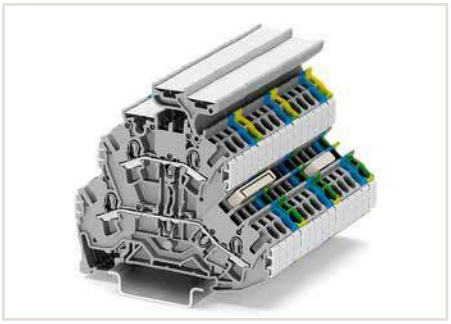
Double-deck terminal block assembly

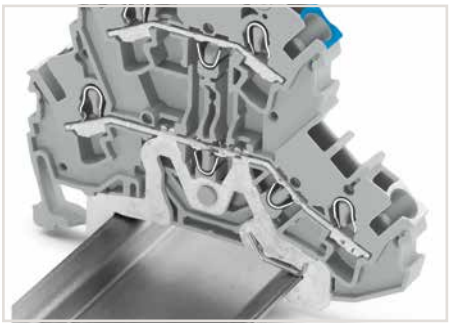
Both ground and shield conductor terminal blocks have a contact foot in the bottom level, automatically establishing direct contact to the carrier rail or busbar.
The flexible double-deck marker carrier, which is placed above the wiring level, can be pushed aside during wiring. The carrier has two staggered levels for WMB markers that perfectly line up to the terminal block decks.
With a terminal block width of just 5.2 mm, an effective width of just 2.6 mm for terminal blocks of same or different potentials can be realized for conductors ranging 0.25 mm² ... 4 mm² (22 ... 12 AWG).
Shielded control cables are becoming an increasingly common solution to external signal interference.
Front-entry shield conductor terminal blocks are ideally suited to connect braided cables. Like front-entry ground conductor terminal blocks, they are equipped with a grounding foot for direct electrical connection to the rail, however they differ significantly by their white insulated housing. Front-entry shield conductor terminal blocks can be directly mounted beside signal-conductor terminal blocks, providing excellent deflection of interfering signals.

❶ Conductor range: 0.25 ... 4 mm² "s + f-st"; Push-in termination: 0.75 ... 4 mm² "s" and 0.75 ... 2.5 mm² "insulated ferrule, 12 mm"

❷ 500 V = rated voltage
6 kV = rated surge voltage
3 = pollution degree
(see Section 14)

❸ Suitable for Ex i applications

❹ Suitable for Ex e II applications
440 V, 20 A
Jumper 18 A
(see Section 14)

❺ See application notes for:
Colored push-in type jumper bar, page 134
Vertical jumper, page 139

	Item No.	Pack. Unit
Double-deck terminal block, shield conductor/through terminal block, with marker carrier, gray housing		
Shield/N	**2002-2248**	50
Shield/L	**2002-2258**	50

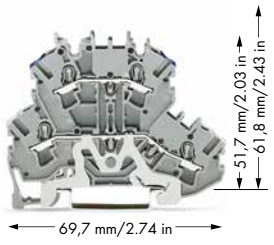

	Item No.	Pack. Unit
Double-deck terminal block, shield conductor/through terminal block, without marker carrier, gray housing		
Shield/N	**2002-2218**	50
Shield/L	**2002-2228**	50

2002 Series Accessories

Appropriate marking system (see Section 13)

End and intermediate plate, 0.8 mm thick			
	orange	**2002-2292**	100 (4x25)
	gray	**2002-2291**	100 (4x25)
Separator for Ex e/Ex i applications, 3 mm thick, orange ❺			
	125.5 mm	**209-192**	50 (2x25)
Double-deck marker carrier, pivoting			
	gray	**2002-121**	50 (2x25)
Insulation stop, 5 pcs/strip, 0.25 ... 0.5 mm²			
	light gray	**2002-171**	200 (8x25)
Insulation stop, 5 pcs/strip, 0.75 ... 1 mm²			
	dark gray	**2002-172**	200 (8x25)
Push-in type jumper bar, insulated, I_N 25 A, light gray ❺			
	2-way	**2002-402**	200 (8x25)
	3-way	**2002-403**	200 (8x25)
	4-way	**2002-404**	200 (8x25)
	5-way	**2002-405**	100 (4x25)
	6-way	**2002-406**	100 (4x25)
	7-way	**2002-407**	100 (4x25)
	8-way	**2002-408**	100 (4x25)
	9-way	**2002-409**	100 (4x25)
	10-way	**2002-410**	100 (4x25)
Push-in type jumper bar, insulated, I_N 25 A, light gray			
	from 1 to 3	**2002-433**	200 (8x25)
	from 1 to 4	**2002-434**	200 (8x25)
	from 1 to 5	**2002-435**	100 (4x25)
	from 1 to 6	**2002-436**	100 (4x25)
	from 1 to 7	**2002-437**	100 (4x25)
	from 1 to 8	**2002-438**	100 (4x25)
	from 1 to 9	**2002-439**	100 (4x25)
	from 1 to 10	**2002-440**	100 (4x25)
Double-deck vertical jumper, insulated, I_N 24 A ❺			
	light gray	**2002-492**	100 (4x25)
	orange	**2002-492/000-012**	

TOPJOB® S
Double-Deck Terminal Blocks with End Plate, 800 V
2.5 (4) mm², 2002 Series

1

0.25 … 2.5 (4) mm² ❶ 800 V/8 kV/3 ❷ I_N 24 A	22 … 12 AWG 600 V, 20 A 600 V, 20 A	Terminal block width 6.2 mm / 0.244 inch 10 … 12 mm / 0.39 … 0.47 inch

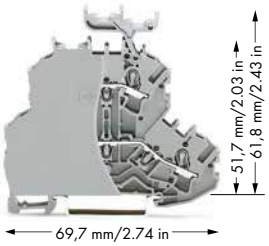

Item No.		Pack. Unit
Double-deck terminal block, through/through terminal block, with end plate, with marker carrier, gray housing		
L/L	2002-2231/099-000	50
N/L	2002-2232/099-000	50
L/N	2002-2233/099-000	50
Double-deck terminal block, through/through terminal block, with end plate, without marker carrier, gray housing		
L/L	2002-2201/099-000	50
N/L	2002-2202/099-000	50
L/N	2002-2203/099-000	50
Other terminal blocks with the same profile:		
Diode	2002-2211/1000-410	Page 116
LED	2002-2221/1000-434	Page 116

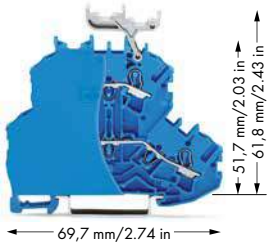

Item No.		Pack. Unit
Double-deck terminal block, through/through terminal block, with end plate, with marker carrier, blue housing		
N/N	2002-2234/099-000 ❸	50
Double-deck terminal block, through/through terminal block, with end plate, without marker carrier, blue housing		
N/N	2002-2204/099-000 ❸	50

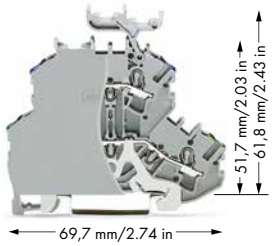

Item No.		Pack. Unit
Double-deck terminal block, ground conductor/through terminal block, with end plate, with marker carrier, gray housing		
PE/N	2002-2247/099-000	50
PE/L	2002-2257/099-000	50
Double-deck terminal block, ground conductor/through terminal block, with end plate, without marker carrier, gray housing		
PE/N	2002-2217/099-000	50
PE/L	2002-2227/099-000	50

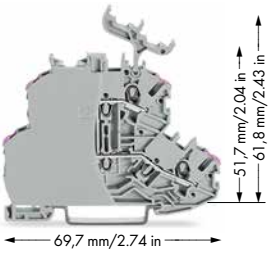

Item No.		Pack. Unit
Double-deck terminal block, 4-conductor through terminal block, with end plate, with marker carrier, internally commoned, violet conductor entry, gray housing		
L	2002-2238/099-000	50
Double-deck terminal block, 4-conductor through terminal block, with end plate, without marker carrier, internally commoned, violet conductor entry, gray housing		
L	2002-2208/099-000	50

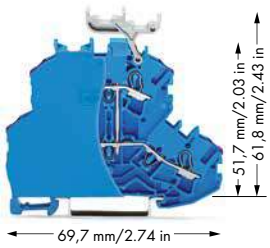

Item No.		Pack. Unit
Double-deck terminal block, 4-conductor through terminal block, with end plate, with marker carrier, internally commoned, violet conductor entry, blue housing		
N	2002-2239/099-000 ❸	50
Double-deck terminal block, 4-conductor through terminal block, with end plate, without marker carrier, internally commoned, violet conductor entry, blue housing		
N	2002-2209/099-000 ❸	50

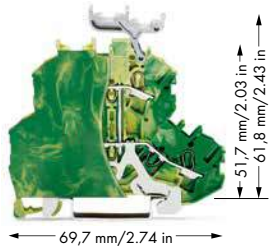

Item No.		Pack. Unit
Double-deck terminal block, 4-conductor ground terminal block, with end plate, with marker carrier, internally commoned, green-yellow housing		
PE	2002-2237/099-000	50
Double-deck terminal block, 4-conductor ground terminal block, with end plate, without marker carrier, internally commoned, green-yellow housing		
PE	2002-2207/099-000	50

Overview of certification organizations, see page 654

0.25 ... 2.5 (4) mm² ❶	22 ... 12 AWG
800 V/8 kV/3 ❷	600 V, 20 A
I_N 24 A	600 V, 20 A

Terminal block width 6.2 mm / 0.244 inch
10 ... 12 mm / 0.39 ... 0.47 inch

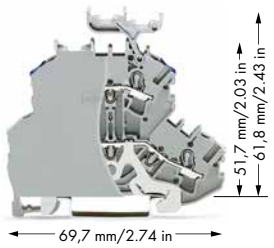

Protective warning marker and insulation stop must be applied individually. Due to the 6.2 mm width of double-deck terminal blocks with end plate, 2004 Series jumpers must be used.

❶ Conductor range: 0.25 ... 4 mm² "s + f-st"; Push-in termination: 0.75 ... 4 mm² "s" and 0.75 ... 2.5 mm² "insulated ferrule, 12 mm"

❷ 800 V = rated voltage
8 kV = rated surge voltage
3 = pollution degree
(see Section 14)

❸ Suitable for Ex i applications

❹ See application notes for: Vertical jumper, page 139

	Item No.	Pack. Unit
Double-deck terminal block, shield conductor/through terminal block, with end plate, with marker carrier, gray housing		
Shield/N	**2002-2248/099-000**	50
Shield/L	**2002-2258/099-000**	50
Double-deck terminal block, shield conductor/through terminal block, with end plate, without marker carrier, gray housing		
Shield/N	**2002-2218/099-000**	50
Shield/L	**2002-2228/099-000**	50

2002 Series Accessories

Appropriate marking systems: WMB/WMB Inline/Marking strips (see Section 13)

End and intermediate plate, 0.8 mm thick



orange	**2002-2292**	100 (4x25)
gray	**2002-2291**	100 (4x25)

Double-deck marker carrier, pivoting



gray	**2002-121**	50 (2x25)

Insulation stop, 5 pcs/strip, 0.25 ... 0.5 mm²



light gray	**2002-171**	200 (8x25)

Insulation stop, 5 pcs/strip, 0.75 ... 1 mm²



dark gray	**2002-172**	200 (8x25)

Push-in type jumper bar, insulated, I_N 32 A, light gray



2-way	**2004-402**	200 (8x25)
3-way	**2004-403**	200 (8x25)
4-way	**2004-404**	100 (4x25)
5-way	**2004-405**	100 (4x25)
6-way	**2004-406**	100 (4x25)
7-way	**2004-407**	100 (4x25)
8-way	**2004-408**	100 (4x25)
9-way	**2004-409**	100 (4x25)
10-way	**2004-410**	100 (4x25)

Push-in type jumper bar, insulated, I_N 32 A, light gray



from 1 to 3	**2004-433**	200 (8x25)
from 1 to 4	**2004-434**	200 (8x25)
from 1 to 5	**2004-435**	100 (4x25)
from 1 to 6	**2004-436**	100 (4x25)
from 1 to 7	**2004-437**	100 (4x25)
from 1 to 8	**2004-438**	100 (4x25)
from 1 to 9	**2004-439**	100 (4x25)
from 1 to 10	**2004-440**	100 (4x25)

Double-deck vertical jumper, insulated, I_N 24 A ❹

light gray	**2002-492**	100 (4x25)
orange	**2002-492/000-012**	

Protective warning marker, with black high-voltage symbol, for 5 terminal blocks



yellow	**2002-115**	100 (4x25)

Test plug adapter, for 4 mm Ø test plug



gray	**2009-174**	100 (4x25)

Banana plug, for 4 mm socket diameter, color mixed, 10 x



orange, white, black, blue, yellow	**215-111**	50

WMB Multi marking system, white, 10 strips with 10 markers per card, 5 ... 5.2 mm stretchable

plain	**793-5501**	5

WMB Multi marking system, white, 10 strips with 10 markers per card, 5 ... 5.2 mm stretchable



yellow	**793-5501/000-002**	
red	**793-5501/000-005**	
blue	**793-5501/000-006**	
gray	**793-5501/000-007**	
orange	**793-5501/000-012**	
light green	**793-5501/000-017**	
green	**793-5501/000-023**	
violet	**793-5501/000-024**	
		5

Marking strip, plain, 11 mm wide, 50 m reel

white	**2009-110**	1

PUSH-IN CAGE CLAMP®

TOPJOB® S
Double-Deck Terminal Blocks
2.5 (4) mm², 2002 Series

1

0.25 … 2.5 (4) mm² ❶ | 22 … 12 AWG **AC/DC 1000 V/ DC 1500 V/12 kV/3 ❷** **I_N 24 A** **Terminal block width 7.2 mm / 0.283 inch** **10 … 12 mm / 0.39 … 0.47 inch**	**0.25 … 2.5 (4) mm² ❶ | 22 … 12 AWG** **AC/DC 1000 V/ DC 1500 V/12 kV/3 ❷** **I_N 24 A** **Terminal block width 7.2 mm / 0.283 inch** **10 … 12 mm / 0.39 … 0.47 inch**

Protective warning marker and insulation stop must be applied individually.

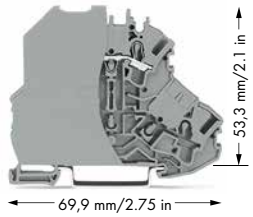

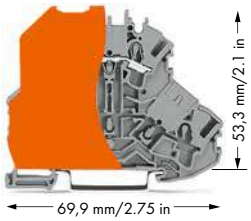

❶ Conductor range: 0.25 … 4 mm² "s + f-st"; Push-in termination: 0.75 … 4 mm² "s" and 0.75 … 2.5 mm² "insulated ferrule, 12 mm"

❷ AC/DC 1000 V = rated voltage
DC 1500 V
12 kV = rated surge voltage
3 = pollution degree
(see Section 14)

	Item No.	Pack. Unit
Double-deck terminal block, contact insert only on upper deck, gray separator, oversized, gray housing		
L	**2002-2201/097-000**	50

	Item No.	Pack. Unit
Double-deck terminal block, contact insert only on upper deck, orange separator, oversized, gray housing		
L	**2002-2201/098-000**	50

2002 Series Accessories

Appropriate marking systems: WMB/WMB Inline/Marking strips (see Section 13)

Separator, oversized upper deck, snap-on type, 2 mm thick			
	orange	**2002-2296**	100 (4x25)
	gray	**2002-2295**	100 (4x25)
Double-deck marker carrier, pivoting			
	gray	**2002-121**	50 (2x25)
Insulation stop, 5 pcs/strip, 0.25 … 0.5 mm²			
	light gray	**2002-171**	200 (8x25)
Insulation stop, 5 pcs/strip, 0.75 … 1 mm²			
	dark gray	**2002-172**	200 (8x25)

Protective warning marker, with black high-voltage symbol, for 5 terminal blocks			
	yellow	**2002-115**	100 (4x25)
Test plug adapter, for 4 mm Ø test plug			
	gray	**2009-174**	100 (4x25)
Testing tap, for max. 2.5 mm²			
	gray	**2009-182**	100 (4x25)
WMB Multi marking system, white, 10 strips with 10 markers per card, 5 … 5.2 mm stretchable			
	plain	**793-5501**	50
WMB Multi marking system, white, 10 strips with 10 markers per card, 5 … 5.2 mm stretchable			
	yellow	**793-5501/000-002**	5
	red	**793-5501/000-005**	
	blue	**793-5501/000-006**	
	gray	**793-5501/000-007**	
	orange	**793-5501/000-012**	
	light green	**793-5501/000-017**	
	green	**793-5501/000-023**	
	violet	**793-5501/000-024**	
Marking strip, plain, 11 mm wide, 50 m reel			
	white	**2009-110**	5

Overview of certification organizations, see page 654

PUSH-IN CAGE CLAMP®

TOPJOB® S
Double-Deck Terminal Blocks with Vertical Conductor Entries
2.5 (4) mm², 2002 Series

0.25 … 2.5 (4) mm² ❶ | 22 … 12 AWG 800 V/8 kV/3 ❷ I_N 24 A (28 A) Terminal block width 5.2 mm / 0.205 inch 10 … 12 mm / 0.39 … 0.47 inch	0.25 … 2.5 (4) mm² ❶ | 22 … 12 AWG 800 V/8 kV/3 ❷ I_N 24 A (28 A) Terminal block width 5.2 mm / 0.205 inch 10 … 12 mm / 0.39 … 0.47 inch

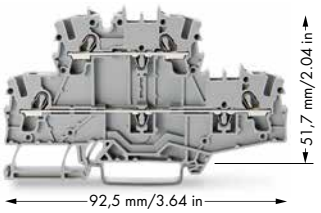

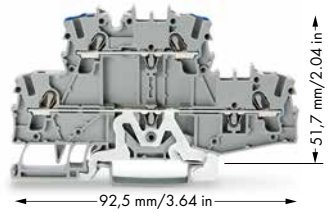

❶ Conductor range: 0.25 … 4 mm² "s + f-st"; Push-in termination: 0.75 … 4 mm² "s" and 0.75 … 2.5 mm² "insulated ferrule, 12 mm"

❷ 800 V = rated voltage
8 kV = rated surge voltage
3 = pollution degree
(see Section 14)

❸ See application notes for:
Colored push-in type jumper bar, page 134
Vertical jumper, page 139
Adjacent jumper for continuous commoning, page 137

	Item No.	Pack. Unit
Double-deck terminal block, through/through terminal block, with vertical conductor entry, without marker carrier, gray housing		
L/L	2002-2701	50
N/L	2002-2702	50
L/N	2002-2703	50
Double-deck terminal block, through/through terminal block, with vertical conductor entry, without marker carrier, blue housing		
N/N	2002-2704	50

	Item No.	Pack. Unit
Double-deck terminal block, ground conductor/through terminal block, with vertical conductor entry, without marker carrier, gray housing		
PE/N	2002-2717	50
PE/L	2002-2727	50

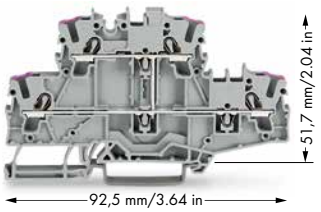

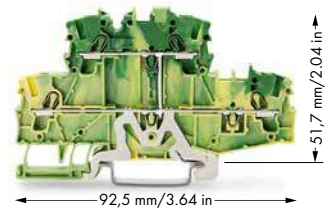

	Item No.	Pack. Unit
Double-deck terminal block, 4-conductor through terminal block, with vertical conductor entry, without marker carrier, internally commoned, violet conductor entry, gray housing		
L	2002-2708	50
Double-deck terminal block, 4-conductor through terminal block, with vertical conductor entry, without marker carrier, internally commoned, violet conductor entry, blue housing		
N	2002-2709	50

	Item No.	Pack. Unit
Double-deck terminal block, 4-conductor ground terminal block, with vertical conductor entry, without marker carrier, internally commoned, green-yellow housing		
PE	2002-2707	50

2002 Series Accessories

Appropriate marking systems: (see Section 13)

End and intermediate plate, 1 mm thick			
	orange	2002-2792	100 (4x25)
	gray	2002-2791	100 (4x25)
Double-deck marker carrier, pivoting			
	gray	2002-121	50 (2x25)
Insulation stop, 5 pcs/strip, 0.25 … 0.5 mm²			
	light gray	2002-171	200 (8x25)
Insulation stop, 5 pcs/strip, 0.75 … 1 mm²			
	dark gray	2002-172	200 (8x25)
Push-in type jumper bar, insulated, I_N 25 A, light gray ❸			
	2-way	2002-402	200 (8x25)
	3-way	2002-403	200 (8x25)
	4-way	2002-404	200 (8x25)
	5-way	2002-405	100 (4x25)
	6-way	2002-406	100 (4x25)
	7-way	2002-407	100 (4x25)
	8-way	2002-408	100 (4x25)
	9-way	2002-409	100 (4x25)
	10-way	2002-410	100 (4x25)
Push-in type jumper bar, insulated, I_N 25 A, light gray			
	from 1 to 3	2002-433	200 (8x25)
	from 1 to 4	2002-434	200 (8x25)
	from 1 to 5	2002-435	100 (4x25)
	from 1 to 6	2002-436	100 (4x25)
	from 1 to 7	2002-437	100 (4x25)
	from 1 to 8	2002-438	100 (4x25)
	from 1 to 9	2002-439	100 (4x25)
	from 1 to 10	2002-440	100 (4x25)
Double-deck vertical jumper, insulated, I_N 24 A ❸			
	light gray	2002-492	100 (4x25)
	orange	2002-492/000-012	
Adjacent jumper for continuous commoning, insulated, I_N ❸			
	25 A, light gray		
	2-way	2002-400	100 (4x25)

TOPJOB® S
4-Conductor, Double-Deck Terminal Blocks
2.5 (4) mm², 2002 Series

1

0.25 … 2.5 (4) mm² ❶ 800 V/8 kV/3 ❷ I_N 24 A (28 A)	22 … 12 AWG 600 V, 20 A 600 V, 20 A	Terminal block width 5.2 mm / 0.205 inch 10 … 12 mm / 0.39 … 0.47 inch
0.25 … 2.5 (4) mm² ❶ 800 V/8 kV/3 ❷ I_N 24 A (28 A)	22 … 12 AWG 600 V, 20 A 600 V, 20 A	Terminal block width 5.2 mm / 0.205 inch 10 … 12 mm / 0.39 … 0.47 inch
0.25 … 2.5 (4) mm² ❶ 800 V/8 kV/3 ❷ I_N 24 A (28 A)	22 … 12 AWG 600 V, 20 A 600 V, 20 A	Terminal block width 5.2 mm / 0.205 inch 10 … 12 mm / 0.39 … ❸47 inch

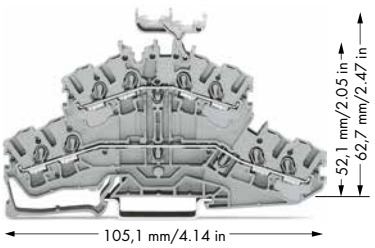

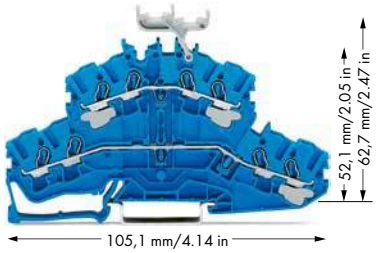

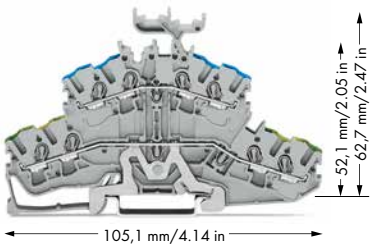

	Item No.	Pack. Unit
4-conductor, double deck terminal block, through/through terminal block, with marker carrier, gray housing		
L/L	**2002-2431**	50
N/L	**2002-2432**	50
L/N	**2002-2433**	50
4-conductor, double deck terminal block, through/through terminal block, without marker carrier, gray housing		
L/L	**2002-2401**	50
N/L	**2002-2402**	50
L/N	**2002-2403**	50
Ex Approvals are pending		

	Item No.	Pack. Unit
4-conductor, double deck terminal block, through/through terminal block, with marker carrier, blue housing		
N/N	**2002-2434** ❸	50
4-conductor, double deck terminal block, through/through terminal block, without marker carrier, blue housing		
N/N	**2002-2404** ❸	50

	Item No.	Pack. Unit
4-conductor, double deck terminal block, ground conductor/through terminal block, with marker carrier, gray housing		
PE/N	**2002-2447**	50
PE/L	**2002-2457**	50
4-conductor, double deck terminal block, ground conductor/through terminal block, without marker carrier, gray housing		
PE/N	**2002-2417**	50
PE/L	**2002-2427**	50

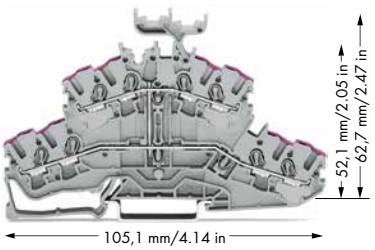

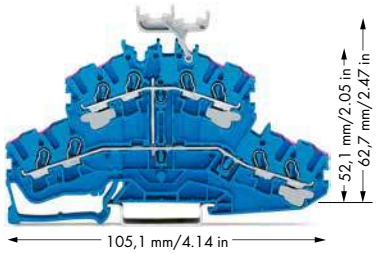

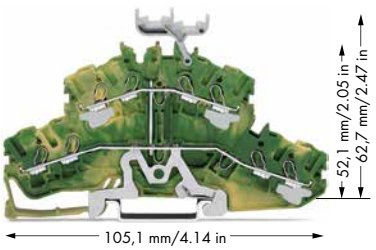

	Item No.	Pack. Unit
4-conductor, double deck terminal block, 8-conductor through terminal block, with marker carrier, internally commoned, conductor entry position colored in violet, gray housing		
L	**2002-2438**	50
4-conductor, double deck terminal block, 8-conductor through terminal block, without marker carrier, internally commoned, conductor entry position colored in violet, gray housing		
L	**2002-2408**	50

	Item No.	Pack. Unit
4-conductor, double deck terminal block, 8-conductor through terminal block, with marker carrier, internally commoned, conductor entry position colored in violet, blue housing		
N	**2002-2439** ❸	50
4-conductor, double deck terminal block, 8-conductor through terminal block, without marker carrier, internally commoned, conductor entry position colored in violet, blue housing		
N	**2002-2409** ❸	50

	Item No.	Pack. Unit
4-conductor, double deck terminal block, 8-conductor ground terminal block, with marker carrier, internally commoned, green-yellow housing		
PE	**2002-2437**	50
4-conductor, double deck terminal block, 8-conductor ground terminal block, without marker carrier, internally commoned, green-yellow housing		
PE	**2002-2407**	50

Overview of certification organizations, see page 654

0.25 ... 2.5 (4) mm² ❶	22 ... 12 AWG
800 V/8 kV/3 ❷	600 V, 20 A
I_N 24 A (28 A)	600 V, 20 A

Terminal block width 5.2 mm / 0.205 inch
10 ... 12 mm / 0.39 ... 0.47 inch

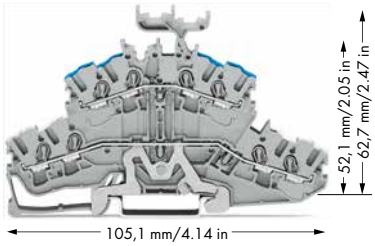

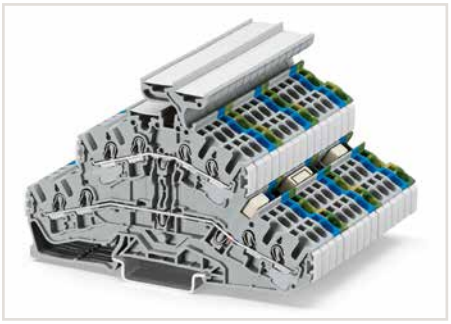
Double-deck terminal block assembly

❶ Conductor range: 0.25 ... 4 mm² "s + f-st";
Push-in termination: 0.75 ... 4 mm² "s"
and 0.75 ... 2.5 mm²
"insulated ferrule, 12 mm"

❷ 800 V = rated voltage
8 kV = rated surge voltage
3 = pollution degree
(see Section 14)

❸ Suitable for Ex i applications

❹ See application notes for:
Colored push-in type jumper bar, page 134
Adjacent jumper for continuous commoning, page 137
Vertical jumper, page 139
Banana plug, page 330
TOPJOB® S group marker carrier, page 143

	Item No.	Pack. Unit
4-conductor, double deck terminal block, shield conductor/through terminal block, with marker carrier, gray housing		
Shield/N	**2002-2448**	50
Shield/L	**2002-2458**	50
4-conductor, double deck terminal block, shield conductor/through terminal block, without marker carrier, gray housing		
Shield/N	**2002-2418**	50
Shield/L	**2002-2428**	50

2002 Series Accessories

Appropriate marking systems: WMB/WMB Inline/Marking strips (see Section 13)

End and intermediate plate, 0.8 mm thick

orange **2002-2492** 100 (4x25)
gray **2002-2491** 100 (4x25)

Double-deck marker carrier, pivoting

gray **2002-121** 50 (2x25)

Insulation stop, 5 pcs/strip, 0.25 ... 0.5 mm²

light gray **2002-171** 200 (8x25)

Insulation stop, 5 pcs/strip, 0.75 ... 1 mm²

dark gray **2002-172** 200 (8x25)

Push-in type jumper bar, insulated, I_N 25 A, light gray ❹

2-way **2002-402** 200 (8x25)
3-way **2002-403** 200 (8x25)
4-way **2002-404** 200 (8x25)
5-way **2002-405** 100 (4x25)
6-way **2002-406** 100 (4x25)
7-way **2002-407** 100 (4x25)
8-way **2002-408** 100 (4x25)
9-way **2002-409** 100 (4x25)
10-way **2002-410** 100 (4x25)

Push-in type jumper bar, insulated, I_N 25 A, light gray

from 1 to 3 **2002-433** 200 (8x25)
from 1 to 4 **2002-434** 200 (8x25)
from 1 to 5 **2002-435** 100 (4x25)
from 1 to 6 **2002-436** 100 (4x25)
from 1 to 7 **2002-437** 100 (4x25)
from 1 to 8 **2002-438** 100 (4x25)
from 1 to 9 **2002-439** 100 (4x25)
from 1 to 10 **2002-440** 100 (4x25)

Adjacent jumper for continuous commoning, insulated, I_N ❹

25 A, light gray
2-way **2002-400** 100 (4x25)

Adjacent jumper for continuous commoning, insulated, I_N ❹

25 A, light gray
1 to 3 **2002-423** 100 (4x25)

Double-deck vertical jumper, insulated, I_N 24 A ❹

light gray **2002-492** 100 (4x25)
orange **2002-492/000-012**

Protective warning marker, with black high-voltage symbol, for 5 terminal blocks

yellow **2002-115** 100 (4x250)

Test plug adapter, for 4 mm Ø test plug

gray **2009-174** 100 (4x25)

Banana plug, for 4 mm socket diameter, color mixed, 10 x ❹

orange, white, black, blue, yellow
215-111 5

Testing tap, for max. 2.5 mm²

gray **2009-182** 100 (4x25)

WMB Multi marking system, white, 10 strips with 10 markers per card, 5 ... 5.2 mm stretchable

plain **793-5501**

WMB Multi marking system, white, 10 strips with 10 markers per card, 5 ... 5.2 mm stretchable

yellow **793-5501/000-002** 5
red **793-5501/000-005**
blue **793-5501/000-006**
gray **793-5501/000-007**
orange **793-5501/000-012** 1
light green **793-5501/000-017**
green **793-5501/000-023**
violet **793-5501/000-024**
1

WMB Inline, plain, 1,500 WMB markers (5 mm) per reel, 5 ... 5.2 mm stretchable

white **2009-115**

Marking strip, plain, 11 mm wide, 50 m reel

white **2009-110**

TOPJOB® S group marker carrier, snap-on type for jumper slot, 5 mm wide ❹

gray **2009-191** 50 (2x25)

TOPJOB® S
Double-Deck Terminal Blocks
2.5 (4) mm², 2002 Series

1

0.25 … 2.5 (4) mm² ❶ | 22 … 12 AWG 500 V/6 kV/3 ❷ | 300 V, 20 A I_N 24 A (28 A) Terminal block width 5.2 mm / 0.205 inch 10 … 12 mm / 0.39 … 0.47 inch	0.25 … 2.5 (4) mm² ❶ | 22 … 12 AWG 500 V/6 kV/3 ❷ | 300 V, 20 A I_N 24 A (28 A) Terminal block width 5.2 mm / 0.205 inch 10 … 12 mm / 0.39 … 0.47 inch	0.25 … 2.5 (4) mm² ❶ | 22 … 12 AWG 500 V/6 kV/3 ❷ | 300 V, 20 A I_N 24 A (28 A) Terminal block width 5.2 mm / 0.205 inch 10 … 12 mm / 0.39 … 0.47 inch

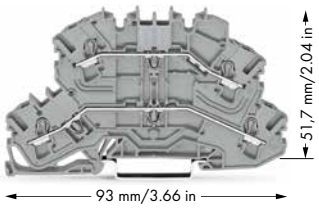

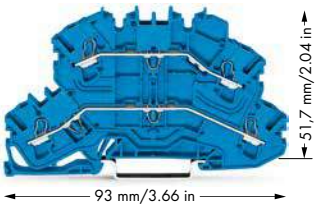

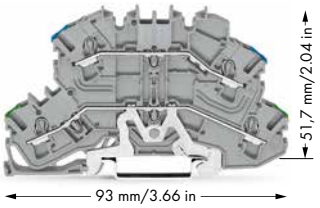

	Item No.	Pack. Unit
Double-deck terminal block, through/through terminal block, same profile as double-deck disconnect terminal block, without marker carrier, gray housing		
L/L	**2002-2601**	50
N/L	**2002-2602**	50
L/N	**2002-2603**	50
Other terminal blocks with the same profile:		
Carrier	**2002-2661**	Page 56
Disconnect	**2002-2671**	Page 56
Fuse	**2002-2611**	Page 57

	Item No.	Pack. Unit
Double-deck terminal block, through/through terminal block, same profile as double-deck disconnect terminal block, without marker carrier, blue housing		
N/N	**2002-2604** ❸	50

	Item No.	Pack. Unit
Double-deck terminal block, ground conductor/through terminal block, same profile as double-deck disconnect terminal block, without marker carrier, gray housing		
PE/N	**2002-2647**	50
PE/L	**2002-2657**	50

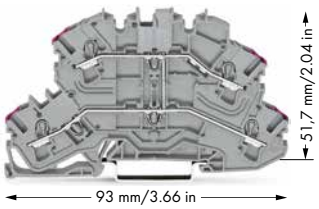

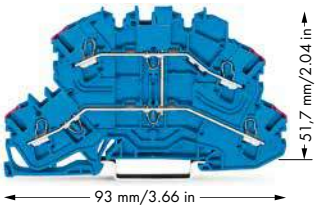

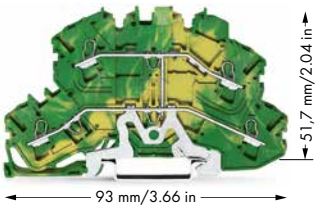

	Item No.	Pack. Unit
Double-deck terminal block, 4-conductor through terminal block, same profile as double-deck disconnect terminal block, without marker carrier, internally commoned, conductor entry position colored in violet, gray housing		
L	**2002-2608**	50

	Item No.	Pack. Unit
Double-deck terminal block, 4-conductor through terminal block, same profile as double-deck disconnect terminal block, without marker carrier, internally commoned, conductor entry position colored in violet, blue housing		
N	**2002-2609** ❸	50

	Item No.	Pack. Unit
Double-deck terminal block, through/through terminal block, same profile as double-deck disconnect terminal block, without marker carrier, internally commoned, green-yellow housing		
PE	**2002-2607**	50

Overview of certification organizations, see page 654

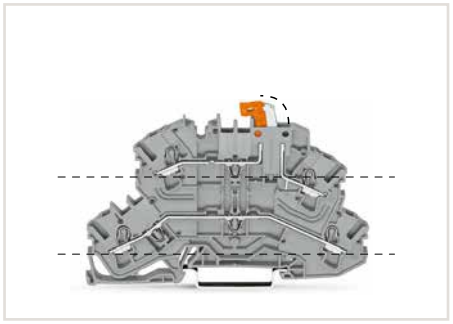

Double-deck disconnect terminal blocks with a pivoting knife disconnect (2002-2671) can be used as through terminal blocks on the lower deck and as disconnect terminal blocks on the upper deck.
Besides disconnection and measurement, double-deck carrier terminal blocks (2002-2667) also provide ground conductor functionality.

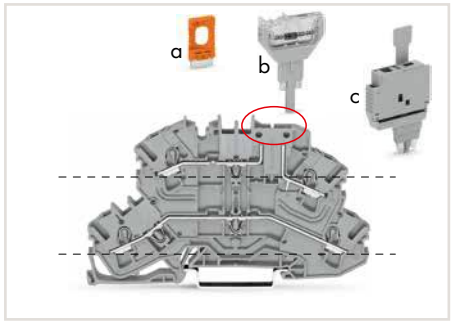

Carrier terminal blocks (2002-2661) have the same design as disconnect terminal blocks.
The following components may be used:
- Disconnect plug (a: 2002-401)
- Pluggable diode (b: 2002-800/1000-411)
- LED module (2002-800/1000-541, no illustration)
- Fuse plug (c: 2004-911)

❶ Conductor range: 0.25 ... 4 mm² "s + f-st"; Push-in termination: 0.75 ... 4 mm² "s" and 0.75 ... 2.5 mm² "insulated ferrule, 12 mm"

❷ 500 V = rated voltage
6 kV = rated surge voltage
3 = pollution degree
(see Section 14)

❸ Suitable for Ex i applications

❹ See application notes for:
Colored push-in type jumper bar, page 134
Vertical jumper, page 139
Adjacent jumper for continuous commoning, page 137



Double-deck fuse disconnect terminal blocks with a pivoting fuse holder (2002-2611, gray) are compatible with disconnect, carrier, through and ground conductor terminal blocks. The fuse holder is also available with a blown fuse LED indicator.
(e.g., 2002-2611/1000-541 for 12 ... 30 V).



An end plate for fuse disconnect terminal blocks (shown in 2002-1092, orange) is used for additional protection, preventing the fuse holder from being opened. The fuse cannot be replaced until disconnecting the fuse holder from the power supply.

2002 Series Accessories

Appropriate marking systems:
(see Section 13)

End and intermediate plate, 1 mm thick			
	orange	**2002-2692**	100 (4x25)
	gray	**2002-2691**	100 (4x25)
Double-deck marker carrier, pivoting			
	gray	**2002-121**	50 (2x25)
Insulation stop, 5 pcs/strip, 0.25 ... 0.5 mm²			
	light gray	**2002-171**	200 (8x25)
Insulation stop, 5 pcs/strip, 0.75 ... 1 mm²			
	dark gray	**2002-172**	200 (8x25)
Push-in type jumper bar, insulated, I_N 25 A, light gray ❹			
	2-way	**2002-402**	200 (8x25)
	3-way	**2002-403**	200 (8x25)
	4-way	**2002-404**	200 (8x25)
	5-way	**2002-405**	100 (4x25)
	6-way	**2002-406**	100 (4x25)
	7-way	**2002-407**	100 (4x25)
	8-way	**2002-408**	100 (4x25)
	9-way	**2002-409**	100 (4x25)
	10-way	**2002-410**	100 (4x25)
Push-in type jumper bar, insulated, I_N 25 A, light gray			
	from 1 to 3	**2002-433**	200 (8x25)
	from 1 to 4	**2002-434**	200 (8x25)
	from 1 to 5	**2002-435**	100 (4x25)
	from 1 to 6	**2002-436**	100 (4x25)
	from 1 to 7	**2002-437**	100 (4x25)
	from 1 to 8	**2002-438**	100 (4x25)
	from 1 to 9	**2002-439**	100 (4x25)
	from 1 to 10	**2002-440**	100 (4x25)
Double-deck vertical jumper, insulated, I_N 24 A ❹			
	light gray	**2002-492**	100 (4x25)
	orange	**2002-492/000-012**	
Adjacent jumper for continuous commoning, insulated, I_N ❹			
	25 A, light gray		
	2-way	**2002-400**	100 (4x25)

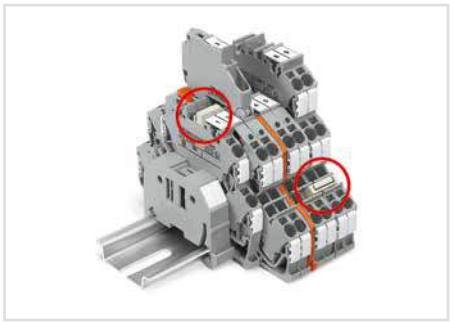

The same profile allows for commoning with TOPJOB® S double-deck terminal blocks (upper deck) and with triple-deck terminal blocks (lower deck).

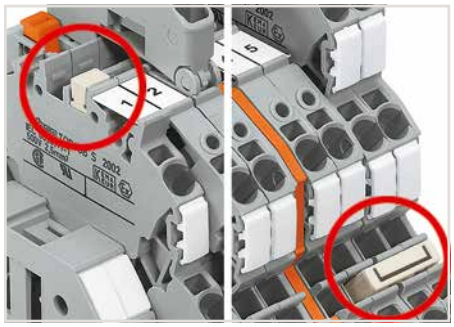

Left picture – Vertical jumper (2002-492)
Right picture – Push-in type jumper bar (2002 Series)

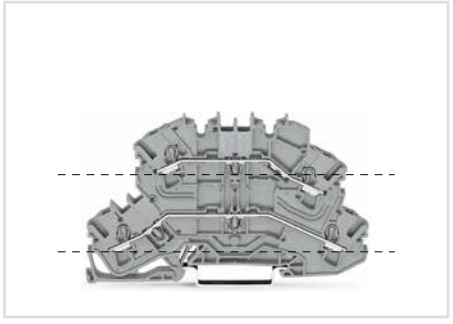

Through terminal blocks (2002-2601) feature two independent current bars on both lower and upper deck, sharing the same profile as disconnect terminal blocks. These terminal blocks can be commoned via double-deck vertical jumpers (2002-492).

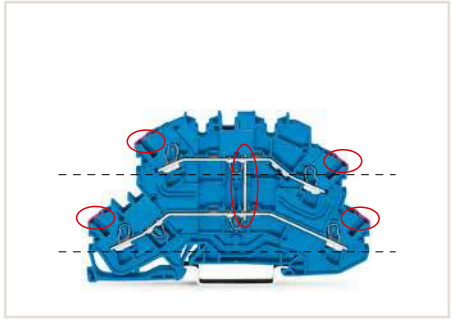

4-conductor through terminal blocks (2002-2609) with internal commoning can be immediately identified via violet conductor entry.

PUSH-IN CAGE CLAMP®

TOPJOB® S
Double-Deck Disconnect Terminal Blocks and Carrier Terminal Blocks
2.5 (4) mm², 2002 Series

1

0.25 … 2.5 (4) mm² ❶ | 22 … 12 AWG 400 V/6 kV/3 ❷ | 300 V, 20 A I_N 16 A Terminal block width 5.2 mm / 0.205 inch 10 … 12 mm / 0.39 … 0.47 inch	0.25 … 2.5 (4) mm² ❶ | 22 … 12 AWG 400 V/6 kV/3 ❷ | 300 V, 20 A I_N 16 A Terminal block width 5.2 mm / 0.205 inch 10 … 12 mm / 0.39 … 0.47 inch

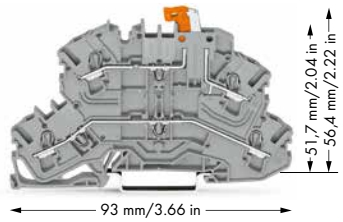

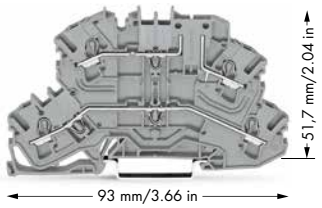

❶ Conductor range: 0.25 … 4 mm² "s + f-st";
Push-in termination: 0.75 … 4 mm² "s"
and 0.75 … 2.5 mm²
"insulated ferrule, 12 mm"

❷ 400 V = rated voltage
6 kV = rated surge voltage
3 = pollution degree
(see Section 14)

❸ See application notes for:
Colored push-in type jumper bar, page 134
Vertical jumper, page 139
Adjacent jumper for continuous commoning, page 137

	Item No.	Pack. Unit
Double-deck disconnect terminal block, with a pivoting knife disconnect, gray housing		
L/L	**2002-2671**	50
N/L	**2002-2672**	50

	Item No.	Pack. Unit
Double-deck carrier terminal block, upper-deck base, gray housing		
L/L	**2002-2661**	50
N/L	**2002-2662**	50

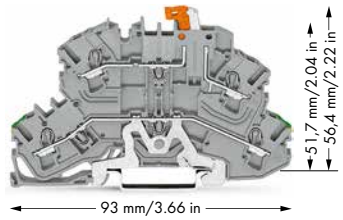

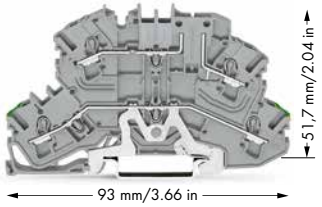

	Item No.	Pack. Unit
Double-deck disconnect terminal block, with a pivoting knife disconnect, gray housing		
L/L	**2002-2678**	50

	Item No.	Pack. Unit
Double-deck carrier terminal block, upper-deck base, gray housing		
PE/L	**2002-2667**	50

2002 Series Accessories

Appropriate marking systems:
(see Section 13)

End and intermediate plate, 1 mm thick



orange	**2002-2692**	100 (4x25)
gray	**2002-2691**	100 (4x25)

Double-deck marker carrier, pivoting



gray	**2002-121**	50 (2x25)

Insulation stop, 5 pcs/strip, 0.25 … 0.5 mm²



light gray	**2002-171**	200 (8x25)

Insulation stop, 5 pcs/strip, 0.75 … 1 mm²



dark gray	**2002-172**	200 (8x25)

Push-in type jumper bar, insulated, I_N 25 A, light gray ❸



2-way	**2002-402**	200 (8x25)
3-way	**2002-403**	200 (8x25)
4-way	**2002-404**	200 (8x25)
5-way	**2002-405**	100 (4x25)
6-way	**2002-406**	100 (4x25)
7-way	**2002-407**	100 (4x25)
8-way	**2002-408**	100 (4x25)
9-way	**2002-409**	100 (4x25)
10-way	**2002-410**	100 (4x25)

Push-in type jumper bar, insulated, I_N 25 A, light gray



from 1 to 3	**2002-433**	200 (8x25)
from 1 to 4	**2002-434**	200 (8x25)
from 1 to 5	**2002-435**	100 (4x25)
from 1 to 6	**2002-436**	100 (4x25)
from 1 to 7	**2002-437**	100 (4x25)
from 1 to 8	**2002-438**	100 (4x25)
from 1 to 9	**2002-439**	100 (4x25)
from 1 to 10	**2002-440**	100 (4x25)

Double-deck vertical jumper, insulated, I_N 24 A ❸

light gray	**2002-492**	100 (4x25)
orange	**2002-492/000-012**	

Adjacent jumper for continuous commoning, insulated, I_N ❸



25 A, light gray		
2-way	**2002-400**	100 (4x25)

Overview of certification organizations, see page 654

PUSH-IN CAGE CLAMP®

TOPJOB® S
Double-Deck Fuse Disconnect Terminal Blocks with Pivoting Fuse Holder
2.5 (4) mm², 2002 Series

0.25 … 2.5 (4) mm² ❶ | **22 … 12 AWG** **250 V/6 kV/3 ❷** | **300 V, 6.3 A** **I_N 6.3 A** **Terminal block width 6.2 mm / 0.244 inch** **10 … 12 mm / 0.39 … 0.47 inch**	**0.25 … 2.5 (4) mm² ❶** | **22 … 12 AWG** **250 V/6 kV/3 ❷** | **30 V, 6.3 A** **I_N 6.3 A** **Terminal block width 6.2 mm / 0.244 inch** **10 … 12 mm / 0.39 … 0.47 inch**

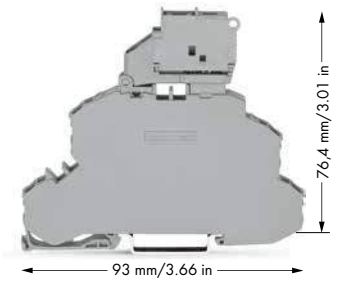

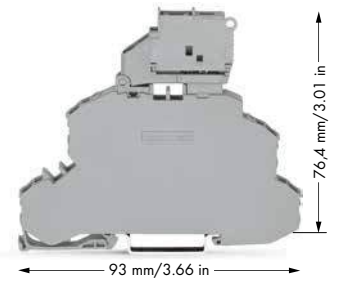

❶ Conductor range: 0.25 … 4 mm² "s + f-st"; Push-in termination: 0.75 … 4 mm² "s" and 0.75 … 2.5 mm² "insulated ferrule, 12 mm"

❷ 250 V = rated voltage
6 kV = rated surge voltage
3 = pollution degree
(see Section 14)

❸ See application notes for: Vertical jumper, page 139

❹ Protective warning marker and insulation stop must be applied individually.

❺ Due to the 6.2 mm width of fuse terminal blocks with pivoting fuse holder, 2004 Series jumpers must be used.

	Item No.	Pack. Unit
Double-deck fuse disconnect terminal block with a pivoting fuse holder, through/fuse terminal block, for (5 x 20) mm miniature metric fuse, without blown fuse indication, gray Electrical ratings are given by the fuse.		
◯ L/L	**2002-2611**	25
◯ N/L	**2002-2612**	25

	Item No.	Pack. Unit
Double-deck fuse disconnect terminal block with a pivoting fuse holder, through/fuse terminal block, for (5 x 20) mm miniature metric fuse, with blown fuse indication by LED, gray Electrical ratings are given by the fuse and blown fuse indication. Leakage current in case of a blown fuse: LED 2 mA		
◯ 12 … 30 V	**2002-2611/1000-541**	25
◯ 30 … 65 V	**2002-2611/1000-542**	25
◯ 230 V	**2002-2611/1000-836**	25

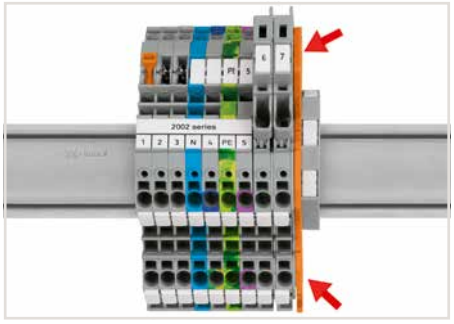

Additionally, an end plate for fuse terminal blocks (e.g., 2002-1092, orange) must be used at the end of an assembly or if there is no adjacent fuse terminal block.

2002 Series Accessories

Appropriate marking systems: WMB/WMB Inline/Marking strips (see Section 13)

End and intermediate plate, 1 mm thick			
orange	**2002-2692**	100 (4x25)	
gray	**2002-2691**	100 (4x25)	
Push-in type jumper bar, insulated, I_N 32 A, light gray ❺			
2-way	**2004-402**	200 (8x25)	
3-way	**2004-403**	200 (8x25)	
4-way	**2004-404**	100 (4x25)	
5-way	**2004-405**	100 (4x25)	
6-way	**2004-406**	100 (4x25)	
7-way	**2004-407**	100 (4x25)	
8-way	**2004-408**	100 (4x25)	
9-way	**2004-409**	100 (4x25)	
10-way	**2004-410**	100 (4x25)	
Push-in type jumper bar, insulated, I_N 32 A, light gray			
from 1 to 3	**2004-433**	200 (8x25)	
from 1 to 4	**2004-434**	200 (8x25)	
from 1 to 5	**2004-435**	100 (4x25)	
from 1 to 6	**2004-436**	100 (4x25)	
from 1 to 7	**2004-437**	100 (4x25)	
from 1 to 8	**2004-438**	100 (4x25)	
from 1 to 9	**2004-439**	100 (4x25)	
from 1 to 10	**2004-440**	100 (4x25)	
Double-deck vertical jumper, insulated, I_N 24 A ❸			
light gray	**2002-492**	100 (4x25)	
orange	**2002-492/000-012**		

End plate for fuse terminal blocks, 2 mm thick			
orange	**2002-1092**	100 (4x25)	
gray	**2002-1091**	100 (4x25)	
Insulation stop, 5 pcs/strip, 0.25 … 0.5 mm² ❹			
light gray	**2002-171**	200 (8x25)	
Insulation stop, 5 pcs/strip, 0.75 … 1 mm²			
dark gray	**2002-172**	200 (8x25)	
Protective warning marker, with black high-voltage symbol, for 5 terminal blocks ❹			
yellow	**2002-115**	100 (4x25)	
Test plug, with 500 mm cable, 2 mm Ø, max. 42 V			
red	**210-136**	50	
Test plug, with 500 mm cable, 2.3 mm Ø, max. 42 V			
yellow	**210-137**	50	
Marking strip, plain, 11 mm wide, 50 m reel			
white	**2009-110**	1	

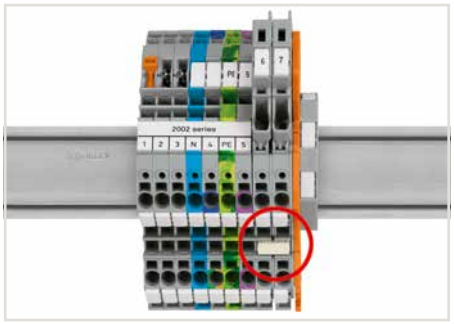

An intermediate plate is supplied with all 6.2 mm wide fuse disconnect terminal blocks.
Due to the 6.2 mm width of fuse disconnect terminal blocks with a pivoting fuse holder, 2004 Series Push-In Type Jumper Bars must be used.

TOPJOB® S
Triple-Deck Terminal Blocks
2.5 (4) mm², 2002 Series

1

0.25 … 2.5 (4) mm² ❶ 500 V/6 kV/3 ❷ I_N 24 A (28 A)	22 … 12 AWG 600 V, 20 A 600 V, 20 A	Terminal block width 5.2 mm / 0.205 inch 10 … 12 mm / 0.39 … 0.47 inch

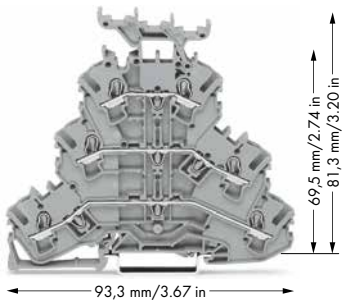

Item No.		Pack. Unit
Triple-deck terminal block, through/through/through terminal block, with marker carrier, gray housing		
L/L/L	2002-3231 ❹	50
L/L/N	2002-3233 ❹	50
Triple-deck terminal block, through/through/through terminal block, without marker carrier, gray housing		
L/L/L	2002-3201 ❹	50
L/L/N	2002-3203 ❹	50
Other terminal blocks with the same profile:		
Diode	2002-3211/1000-410 Page 118	
LED	2002-3221/1000-434 Page 118	

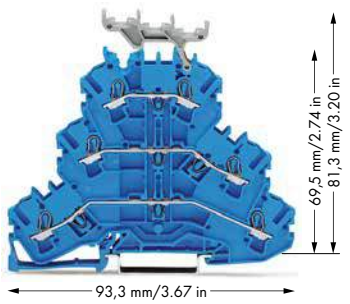

Item No.		Pack. Unit
Triple-deck terminal block, through/through/through terminal block, with marker carrier, blue housing		
N/N/N	2002-3234 ❸ ❹	50
Triple-deck terminal block, through/through/through terminal block, without marker carrier, blue housing		
N/N/N	2002-3204 ❸ ❹	50

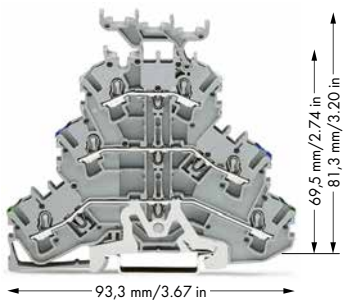

Item No.		Pack. Unit
Triple-deck terminal block, ground conductor/through/through terminal block, with marker carrier, gray housing		
PE/N/L	2002-3247 ❹	50
PE/L/L	2002-3257 ❹	50
Triple-deck terminal block, ground conductor/through/through terminal block, without marker carrier, gray housing		
PE/N/L	2002-3217 ❹	50
PE/L/L	2002-3227 ❹	50

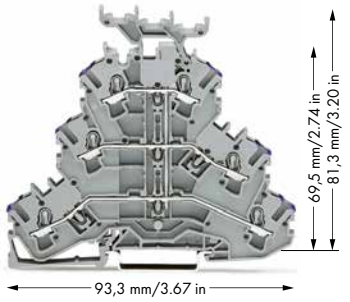

Item No.		Pack. Unit
Triple-deck terminal block, 6-conductor through terminal block, with marker carrier, internally commoned, conductor entry position colored in violet, gray housing		
L	2002-3238 ❹	50
Triple-deck terminal block, 6-conductor through terminal block, without marker carrier, internally commoned, conductor entry position colored in violet, gray housing		
L	2002-3208 ❹	50

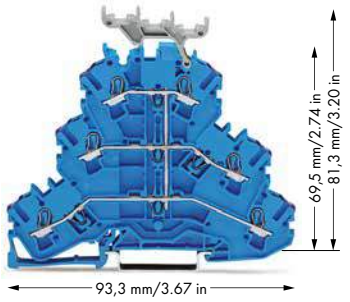

Item No.		Pack. Unit
Triple-deck terminal block, 6-conductor through terminal block, with marker carrier, internally commoned, conductor entry position colored in violet, blue housing		
N	2002-3239 ❸ ❹	50
Triple-deck terminal block, 6-conductor through terminal block, without marker carrier, internally commoned, conductor entry position colored in violet, blue housing		
N	2002-3209 ❸ ❹	50

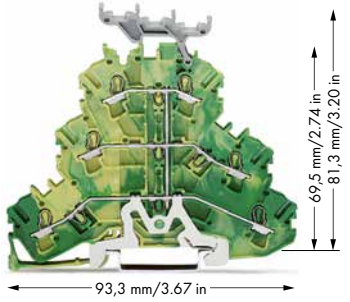

Item No.		Pack. Unit
Triple-deck terminal block, 6-conductor ground terminal block, with marker carrier, internally commoned, green-yellow housing		
PE	2002-3237 ❹	50
Triple-deck terminal block, 6-conductor ground terminal block, without marker carrier, internally commoned, green-yellow housing		
PE	2002-3207	50

Overview of certification organizations, see page 654

0.25 ... 2.5 (4) mm² ❶	22 ... 12 AWG
500 V/6 kV/3 ❷	600 V, 20 A
I_N 24 A (28 A)	600 V, 20 A

Terminal block width 5.2 mm / 0.205 inch
10 ... 12 mm / 0.39 ... 0.47 inch

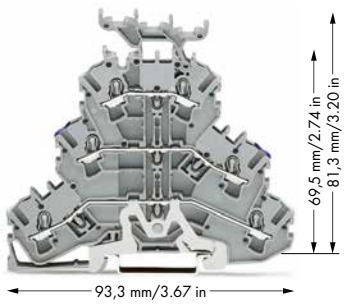

❶ Conductor range: 0.25 ... 4 mm² "s + f-st";
Push-in termination: 0.75 ... 4 mm² "s"
and 0.75 ... 2.5 mm²
"insulated ferrules, 12 mm"

❷ 500 V = rated voltage
6 kV = rated surge voltage
3 = pollution degree
(see Section 14)

❸ Suitable for Ex i applications

❹ Suitable for Ex e II applications
440 V, 19 A
Jumper 17 A
(see Section 14)

❺ See application notes for:
Colored push-in type jumper bar, page 134
Vertical jumper, page 139

	Item No.	Pack. Unit
Triple-deck terminal block, shield/through/through terminal block, with marker carrier, gray housing		
◯ Shield/N/L	**2002-3248**	50
◯ Shield/L/L	**2002-3258**	50
Triple-deck terminal block, Shield/through/through terminal block, without marker carrier, gray housing		
◯ Shield/N/L	**2002-3218**	50
◯ Shield/L/L	**2002-3228**	50



Triple-deck vertical jumpers (2002-493) common the three levels of triple-deck terminal blocks.



Combining multilevel terminal blocks.

2002 Series Accessories

Appropriate marking systems:
(see Section 13)

End and intermediate plate, 0.8 mm thick			
	orange	**2002-3292**	100 (4x25)
	gray	**2002-3291**	100 (4x25)
Triple-deck marker carrier, pivoting			
	gray	**2002-131**	50 (2x25)
Insulation stop, 5 pcs/strip, 0.25 ... 0.5 mm²			
	light gray	**2002-171**	200 (8x25)
Insulation stop, 5 pcs/strip, 0.75 ... 1 mm²			
	dark gray	**2002-172**	200 (8x25)
Push-in type jumper bar, insulated, I_N 25 A, light gray ❺			
	2-way	**2002-402**	200 (8x25)
	3-way	**2002-403**	200 (8x25)
	4-way	**2002-404**	200 (8x25)
	5-way	**2002-405**	100 (4x25)
	6-way	**2002-406**	100 (4x25)
	7-way	**2002-407**	100 (4x25)
	8-way	**2002-408**	100 (4x25)
	9-way	**2002-409**	100 (4x25)
	10-way	**2002-410**	100 (4x25)
Push-in type jumper bar, insulated, I_N 25 A, light gray			
	from 1 to 3	**2002-433**	200 (8x25)
	from 1 to 4	**2002-434**	200 (8x25)
	from 1 to 5	**2002-435**	100 (4x25)
	from 1 to 6	**2002-436**	100 (4x25)
	from 1 to 7	**2002-437**	100 (4x25)
	from 1 to 8	**2002-438**	100 (4x25)
	from 1 to 9	**2002-439**	100 (4x25)
	from 1 to 10	**2002-440**	100 (4x25)
Triple-deck vertical jumper, insulated, I_N 24 A			
❺	light gray	**2002-493**	100 (4x25)
Double-deck vertical jumper, insulated, I_N 24 A			
❺	light gray	**2002-492**	100 (4x25)
	orange	**2002-492/000-012**	

TOPJOB® S
Quadruple-Deck, Rail-Mount Terminal Blocks for Electric Motor Wiring
2.5 (4) mm², 2002 Series

1

0.25 … 2.5 (4) mm² ❶ | 22 … 12 AWG 800 V/8 kV/3 ❷ I_N 20 A (25 A) Terminal block width 5.2 mm / 0.205 inch 10 … 12 mm / 0.39 … 0.47 inch	0.25 … 2.5 (4) mm² ❶ | 22 … 12 AWG 800 V/8 kV/3 ❷ I_N 20 A (25 A) Terminal block width 5.2 mm / 0.205 inch 10 … 12 mm / 0.39 … 0.47 inch	0.25 … 2.5 (4) mm² ❶ | 22 … 12 AWG 800 V/8 kV/3 ❷ I_N 20 A (25 A) Terminal block width 5.2 mm / 0.205 inch 10 … 12 mm / 0.39 … 0.47 inch

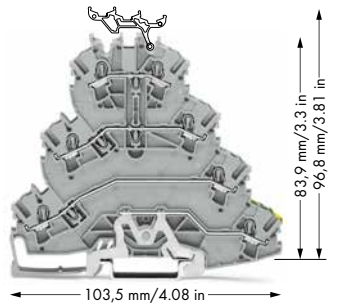

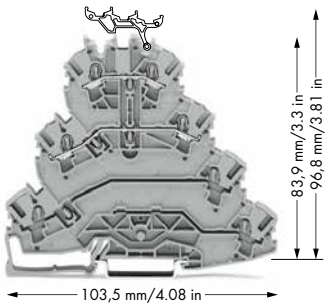

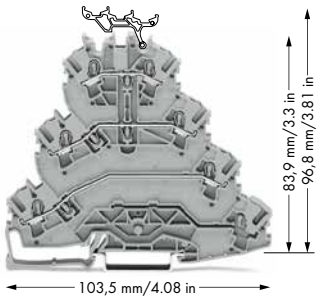

Item No.	Pack. Unit
Quadruple-deck, rail-mount terminal block, electric motor wiring rail-mount terminal block, without marker carrier, gray	
◯ L1 - L2 - L3 - PE **2002-4127**	25
Quadruple-deck, rail-mount terminal block, electric motor wiring rail-mount terminal block, with marker carrier, gray	
◯ L1 - L2 - L3 - PE **2002-4157**	25

Item No.	Pack. Unit
Quadruple-deck, rail-mount terminal block, electric motor wiring rail-mount terminal block, without marker carrier, gray	
◯ L1 - L2 **2002-4111**	25
Quadruple-deck, rail-mount terminal block, electric motor wiring rail-mount terminal block, with marker carrier, gray	
◯ L1 - L2 **2002-4141**	25

Item No.	Pack. Unit
Quadruple-deck, rail-mount terminal block, electric motor wiring rail-mount terminal block, without marker carrier, gray	
◯ L1 - L2 - L3 **2002-4101**	25
Quadruple-deck, rail-mount terminal block, electric motor wiring rail-mount terminal block, with marker carrier, gray	
◯ L1 - L2 - L3 **2002-4131**	25

2002 Series Accessories

Appropriate marking systems: WMB/WMB Inline/Marking strips (see Section 13)

End and intermediate plate, 1 mm thick



orange	**2002-4192**	100 (4x25)
gray	**2002-4191**	100 (4x25)

Insulation stop, 5 pcs/strip, 0.25 … 0.5 mm²



light gray	**2002-171**	200 (8x25)

Insulation stop, 5 pcs/strip, 0.75 … 1 mm²



dark gray	**2002-172**	200 (8x25)

Push-in type jumper bar, insulated, I_N 25 A, light gray ❸



2-way	**2002-402**	200 (8x25)
3-way	**2002-403**	200 (8x25)
4-way	**2002-404**	200 (8x25)
5-way	**2002-405**	100 (4x25)
6-way	**2002-406**	100 (4x25)
7-way	**2002-407**	100 (4x25)
8-way	**2002-408**	100 (4x25)
9-way	**2002-409**	100 (4x25)
10-way	**2002-410**	100 (4x25)

Delta jumper, insulated, I_N = I_N terminal block, light gray ❸



1-2 3-4 5-6	**2002-406/020-000**	100 (4x25)

Star point jumper, insulated, I_N = I_N terminal block, light gray ❸



1-3-5	**2002-405/011-000**	100 (4x25)

Protective warning marker, with black high-voltage symbol, for 5 terminal blocks



yellow	**2002-115**	100 (4x25)

Lockout cap, for conductor entry hole and operating slot



orange	**2002-192**	25
gray	**2002-191**	25
blue	**2002-194**	25

Push-in type jumper bar, insulated, I_N 25 A, light gray



from 1 to 3	**2002-433**	200 (8x25)
from 1 to 4	**2002-434**	200 (8x25)
from 1 to 5	**2002-435**	100 (4x25)
from 1 to 6	**2002-436**	100 (4x25)
from 1 to 7	**2002-437**	100 (4x25)
from 1 to 8	**2002-438**	100 (4x25)
from 1 to 9	**2002-439**	100 (4x25)
from 1 to 10	**2002-440**	100 (4x25)

Adjacent jumper for continuous commoning, insulated, I_N 25 A, light gray ❸

2-way	**2002-400**	100 (4x25)

Adjacent jumper for continuous commoning, insulated, I_N 25 A, light gray ❸



1 to 3	**2002-423**	100 (4x25)

Staggered jumper, insulated, I_N 25 A, light gray ❸



2-way	**2002-472**	100 (4x25)
3-way	**2002-473**	100 (4x25)
4-way	**2002-474**	100 (4x25)
5-way	**2002-475**	50 (2x25)
6-way	**2002-476**	50 (2x25)
7-way	**2002-477**	50 (2x25)
8-way	**2002-478**	50 (2x25)
9-way	**2002-479**	50 (2x25)
10-way	**2002-480**	50 (2x25)
11-way	**2002-481**	50 (2x25)
12-way	**2002-482**	50 (2x25)

Push-in type wire jumper, insulated, wire size 1.5 mm², I_N 18 A ❸



L = 60 mm	**2009-412**	100 (10x10)
L = 110 mm	**2009-414**	100 (10x10)
L = 250 mm	**2009-416**	100 (10x10)

WMB Inline, plain, 1,500 WMB markers (5 mm) per reel, 5 … 5.2 mm stretchable



white	**2009-115**	1

Triple-deck marker carrier, pivoting



gray	**2002-131**	50 (2x25)

Overview of certification organizations, see page 654

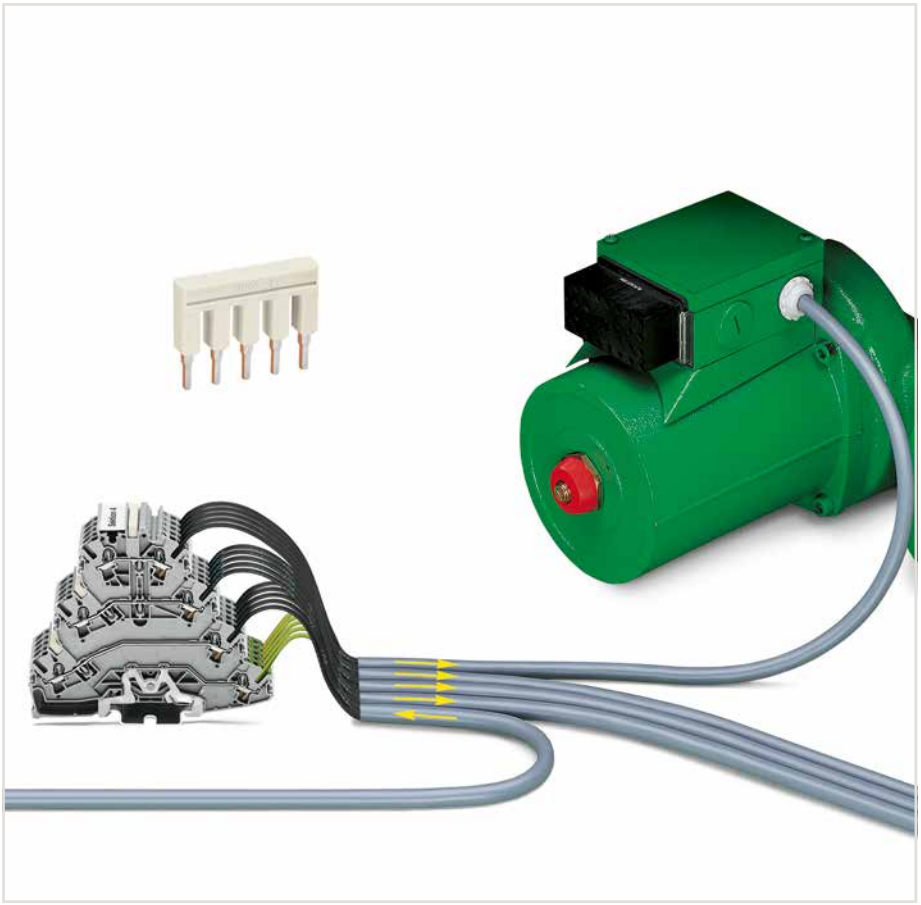

In addition to rail-mount terminal blocks for electric motor wiring, special versions are also available.
• Version **without** ground contact and only two potentials:
These terminal blocks were custom designed to support additional functions, such as engine brakes or temperature sensors. Sharing a common profile, this terminal block version can be put next to the appropriate electric motor wiring terminal block without using intermediate plates. That makes the rail assembly easier to understand and wire. This also prevents wiring errors as no conductor entry is unused.
• Version **without** ground contact and with three potentials:
Clearly designated clamping units iare the primary advantage to this terminal block design. When using devices with protective insulation for example, there are no open ground clamping units that could create confusion.

❶ Conductor range: 0.25 … 4 mm² “s + f-st”;
Push-in termination: 0.75 … 4 mm² “s”
and 0.75 … 2.5 mm²
“insulated ferrule, 12 mm”

❷ 800 V = rated voltage
8 kV = rated surge voltage
3 = pollution degree
(see Section 14)

❸ See application notes for:
Colored push-in type jumper bar, page 134
Staggered jumper, page 136
Delta jumper, page 135
Star point jumper, page 135
Adjacent jumper for continuous commoning, page 137
Push-in type wire jumper, page 138



Creating spacer housings for electric motor wiring rail-mount terminal blocks via lockout caps (2002-192) for conductor entry and operating slot.

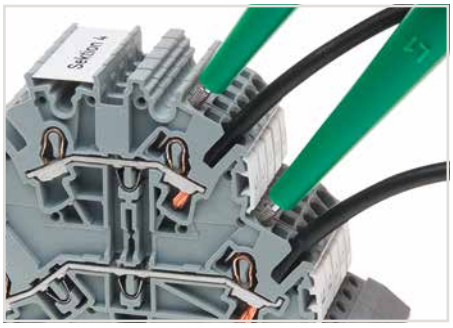

Testing with voltage tester.



Marking clamping points via WMB Multi Marking System. Marking a group of terminal blocks via marking strip.

TOPJOB® S
Double-Deck Disconnect Terminal Blocks for Test and Measurement
2.5 (4) mm², 2002 Series

1

0.25 … 2.5 (4) mm² ❶ 400 V/6 kV/3 ❷ I_N 16 A	22 … 12 AWG 300 V, 15 A 300 V, 15 A	Terminal block width 5.2 mm / 0.205 inch 10 … 12 mm / 0.39 … 0.47 inch
0.25 … 2.5 (4) mm² ❶ 400 V/6 kV/3 ❷ I_N 16 A	22 … 12 AWG 300 V, 15 A 300 V, 15 A	Terminal block width 5.2 mm / 0.205 inch 10 … 12 mm / 0.39 … 0.47 inch
0.25 … 2.5 (4) mm² ❶ 400 V/6 kV/3 ❷ I_N 16 A	22 … 12 AWG 300 V, 15 A 300 V, 15 A	Terminal block width 5.2 mm / 0.205 inch 10 … 12 mm / 0.39 … 0.47 inch

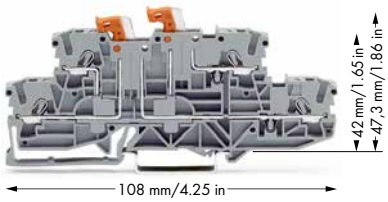

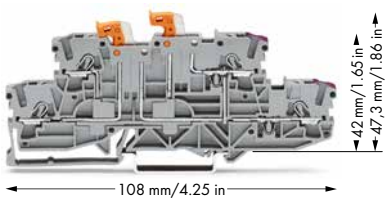

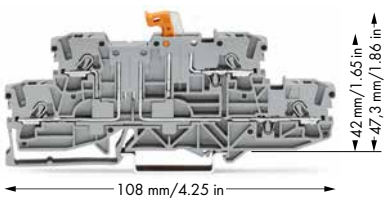

	Item No.	Pack. Unit
Double-deck, double-disconnect terminal block, with two pivoting knife disconnects, gray housing		
L/L	**2002-2951**	50
N/L	**2002-2952**	50
Double-deck, double-disconnect terminal block, with two pivoting knife disconnects, blue housing		
N/N	**2002-2954**	50

	Item No.	Pack. Unit
Double-deck, double-disconnect terminal block, with two pivoting knife disconnects, lower and upper decks internally commoned on right side, violet conductor entry, gray housing		
L/L	**2002-2958**	50
Double-deck, double-disconnect terminal block, with two pivoting knife disconnects, lower and upper decks internally commoned on right side, violet conductor entry, blue housing		
N/N	**2002-2959**	50

	Item No.	Pack. Unit
Double-deck disconnect terminal block, with pivoting knife disconnect, same profile as double-deck, double-disconnect terminal block, gray housing		
L/L	**2002-2971**	50
N/L	**2002-2972**	50
Double-deck disconnect terminal block, with pivoting knife disconnect, same profile as double-deck, double-disconnect terminal block, blue housing		
N/N	**2002-2974**	50

2002 Series Accessories

Appropriate marking systems: WMB/Marking strips (see Section 13)

End and intermediate plate, 1 mm thick



orange	**2002-2992**	100 (4x25)
gray	**2002-2991**	100 (4x25)

Insulation stop, 5 pcs/strip, 0.25 … 0.5 mm²



light gray	**2002-171**	200 (8x25)

Insulation stop, 5 pcs/strip, 0.75 … 1 mm²



dark gray	**2002-172**	200 (8x25)

Push-in type jumper bar, insulated, I_N 25 A, light gray ❸



2-way	**2002-402**	200 (8x25)
3-way	**2002-403**	200 (8x25)
4-way	**2002-404**	200 (8x25)
5-way	**2002-405**	100 (4x25)
6-way	**2002-406**	100 (4x25)
7-way	**2002-407**	100 (4x25)
8-way	**2002-408**	100 (4x25)
9-way	**2002-409**	100 (4x25)
10-way	**2002-410**	100 (4x25)

Push-in type wire jumper, insulated, wire size 1.5 mm², I_N 18 A ❸



L = 60 mm	**2009-412**	100 (10x10)
L = 110 mm	**2009-414**	100 (10x10)
L = 250 mm	**2009-416**	100 (10x10)

Push-in type jumper bar, insulated, I_N 25 A, light gray



from 1 to 3	**2002-433**	200 (8x25)
from 1 to 4	**2002-434**	200 (8x25)
from 1 to 5	**2002-435**	100 (4x25)
from 1 to 6	**2002-436**	100 (4x25)
from 1 to 7	**2002-437**	100 (4x25)
from 1 to 8	**2002-438**	100 (4x25)
from 1 to 9	**2002-439**	100 (4x25)
from 1 to 10	**2002-440**	100 (4x25)

Staggered jumper, insulated, I_N 25 A, light gray ❸



2-way	**2002-472**	100 (4x25)
3-way	**2002-473**	100 (4x25)
4-way	**2002-474**	100 (4x25)
5-way	**2002-475**	50 (2x25)
6-way	**2002-476**	50 (2x25)
7-way	**2002-477**	50 (2x25)
8-way	**2002-478**	50 (2x25)
9-way	**2002-479**	50 (2x25)
10-way	**2002-480**	50 (2x25)
11-way	**2002-481**	50 (2x25)
12-way	**2002-482**	50 (2x25)

Protective warning marker, with black high-voltage symbol, for 5 terminal blocks



yellow	**2002-115**	100 (4x25)

Adjacent jumper for continuous commoning, insulated, I_N ❸



25 A, light gray		
2-way	**2002-400**	100 (4x25)

Adjacent jumper for continuous commoning, insulated, I_N ❸



25 A, light gray		
1 to 3	**2002-423**	100 (4x25)

Modular TOPJOB® S connector, snaps together, for jumper ❸



contact slot		
gray	**2002-511**	100 (4x25)

Spacer module, snaps together, bridges commoned terminal blocks



gray	**2002-549**	100 (4x25)

End plate, for modular TOPJOB® S connector, 1.5 mm thick



gray	**2002-541**	100 (4x25)

Test plug adapter, for 4 mm Ø test plug



gray	**2009-174**	100 (4x25)

Banana plug, for 4 mm socket diameter, color mixed, 10 x ❸



orange, white, black, blue, yellow		
	215-111	50

Testing tap, for max. 2.5 mm²



gray	**2009-182**	100 (4x25)

Overview of certification organizations, see page 654

PUSH-IN CAGE CLAMP®

TOPJOB® S
Double-Deck Disconnect Terminal Blocks with Pivoting Knife Disconnect

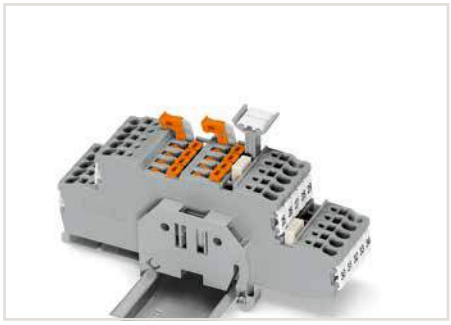

Double-deck, double-disconnect terminal blocks (2002-2951) with group marker carrier accommodated in jumper contact slot

❶ Conductor range: 0.25 … 4 mm² "s + f-st"; Push-in termination: 0.75 … 4 mm² "s" and 0.75 … 2.5 mm² "insulated ferrules, 12 mm"

❷ 400 V = rated voltage
6 kV = rated surge voltage
3 = pollution degree
(see Section 14)

❸ See application notes for:
Colored push-in type jumper bar, page 134
Push-in type wire jumper, page 138
Staggered jumper, page 136
Adjacent jumper for continuous commoning, page 137
TOPJOB® S connector, page 128
Banana plug, page 330
TOPJOB® S group marker carrier, page 143

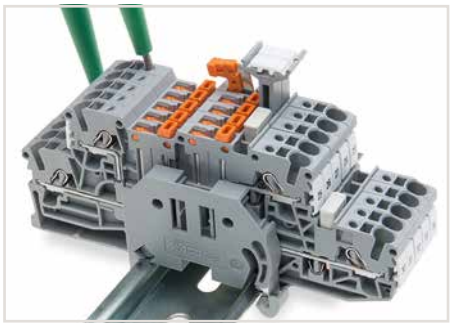

Testing with voltage tester.

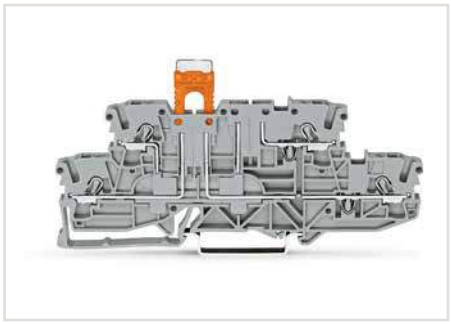

Carrier terminal block (2002-2941) with disconnect plug (2002-401) in parked position

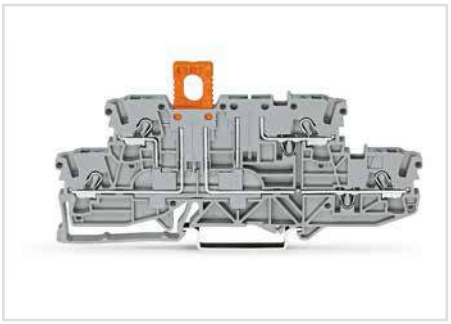

Carrier terminal block (2002-2941) with disconnect plug (2002-401) in operating position

Accessories

WMB Multi marking system, white, 10 strips with 10 markers per card, 5 … 5.2 mm stretchable			
	plain	**793-5501**	5
WMB Multi marking system, plain, 10 strips with 10 markers per card, 5 … 5.2 mm stretchable			
	yellow	**793-5501/000-002**	
	red	**793-5501/000-005**	
	blue	**793-5501/000-006**	
	gray	**793-5501/000-007**	
	orange	**793-5501/000-012**	
	light green	**793-5501/000-017**	
	green	**793-5501/000-023**	
	violet	**793-5501/000-024**	
			5
WMB Inline, plain, 1,500 WMB markers (5 mm) per reel, 5 … 5.2 mm stretchable			
	white	**2009-115**	1
TOPJOB® S group marker carrier, snap-on type for jumper slot, 5 mm wide ❸			
	gray	**2009-191**	50 (2x25)
Screwless end stop, for DIN-35 rail, 6 mm wide			
	gray	**249-116**	100 (4x25)
Screwless end stop, for DIN-35 rail, 10 mm wide			
	gray	**249-117**	50 (2x25)

TOPJOB® S
Disconnect/Test Terminal Blocks and Through Terminal Blocks of Same Profile
2.5 (4) mm², 2002 Series

1

0.25 … 2.5 (4) mm² ❶ 400 V/6 kV/3 ❷ I_N 16 A	22 … 12 AWG 300 V, 15 A 300 V, 10 A	Terminal block width 5.2 mm / 0.205 inch 10 … 12 mm / 0.39 … 0.47 inch
0.25 … 2.5 (4) mm² ❶ 400 V/6 kV/3 ❷ I_N 16 A	22 … 12 AWG 300 V, 15 A	Terminal block width 5.2 mm / 0.205 inch 10 … 12 mm / 0.39 … 0.47 inch
0.25 … 2.5 (4) mm² ❶ 400 V/6 kV/3 ❷ I_N 16 A	22 … 12 AWG 300 V, 15 A 300 V, 10 A	Terminal block width 5.2 mm / 0.205 inch 10 … 12 mm / 0.39 … 0.47 inch

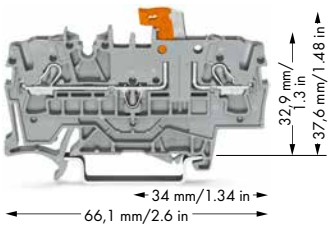

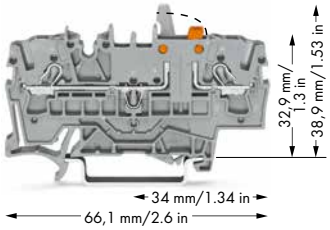

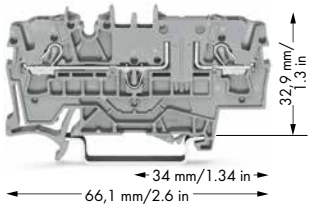

Item No.		Pack. Unit
2-conductor disconnect/test terminal block, with test point, orange disconnect link		
gray	**2002-1671**	50
blue	**2002-1674**	50
orange	**2002-1672**	50

Item No.		Pack. Unit
2-conductor disconnect/test terminal block, with mechanical interlock, with test point, orange disconnect link		
gray	**2002-1671/401-000**	50
blue	**2002-1674/401-000**	50
orange	**2002-1672/401-000**	50

Item No.		Pack. Unit
2-conductor through terminal block, with test point, same profile as 2-conductor disconnect terminal block		
gray	**2002-1601**	50
blue	**2002-1604**	50
orange	**2002-1602**	50
Other terminal blocks with the same profile:		
Carrier	**2002-1661**	Page 96
Fuse	**2002-1681**	Page 70

2002 Series Accessories

Appropriate marking systems: WMB/WMB Inline/Marking strips (see Section 13)

End and intermediate plate, 1 mm thick



orange	**2002-1692**	100 (4x25)
gray	**2002-1691**	100 (4x25)

Insulation stop, 5 pcs/strip, 0.25 … 0.5 mm²



light gray	**2002-171**	200 (8x25)

Insulation stop, 5 pcs/strip, 0.75 … 1 mm²



dark gray	**2002-172**	200 (8x25)

Push-in type jumper bar, insulated, I_N 25 A, light gray ❸



2-way	**2002-402**	200 (8x25)
3-way	**2002-403**	200 (8x25)
4-way	**2002-404**	200 (8x25)
5-way	**2002-405**	100 (4x25)
6-way	**2002-406**	100 (4x25)
7-way	**2002-407**	100 (4x25)
8-way	**2002-408**	100 (4x25)
9-way	**2002-409**	100 (4x25)
10-way	**2002-410**	100 (4x25)

Push-in type wire jumper, insulated, wire size 1.5 mm², I_N 18 A ❸



L = 60 mm	**2009-412**	100 (10x10)
L = 110 mm	**2009-414**	100 (10x10)
L = 250 mm	**2009-416**	100 (10x10)

Protective warning marker, with black high-voltage symbol, for 5 terminal blocks



yellow	**2002-115**	100 (4x25)

Push-in type jumper bar, insulated, I_N 25 A, light gray



from 1 to 3	**2002-433**	200 (8x25)
from 1 to 4	**2002-434**	200 (8x25)
from 1 to 5	**2002-435**	100 (4x25)
from 1 to 6	**2002-436**	100 (4x25)
from 1 to 7	**2002-437**	100 (4x25)
from 1 to 8	**2002-438**	100 (4x25)
from 1 to 9	**2002-439**	100 (4x25)
from 1 to 10	**2002-440**	100 (4x25)

Staggered jumper, insulated, I_N 25 A, light gray ❸



2-way	**2002-472**	100 (4x25)
3-way	**2002-473**	100 (4x25)
4-way	**2002-474**	100 (4x25)
5-way	**2002-475**	50 (2x25)
6-way	**2002-476**	50 (2x25)
7-way	**2002-477**	50 (2x25)
8-way	**2002-478**	50 (2x25)
9-way	**2002-479**	50 (2x25)
10-way	**2002-480**	50 (2x25)
11-way	**2002-481**	50 (2x25)
12-way	**2002-482**	50 (2x25)

Customized staggered jumper, insulated, with contact lugs broken off at the factory and circuit printing, I_N 25 A, light gray



1-3	**2002-473/011-000**	100 (4x25)
1-3-5	**2002-475/011-000**	
1-3-5-7	**2002-477/011-000**	
1-3-5-7-9	**2002-479/011-000**	
1-3-5-7-9-11	**2002-481/011-000**	50 (2x25)

Adjacent jumper for continuous commoning, insulated, I_N 25 A, light gray ❸

2-way	**2002-400**	100 (4x25)

Adjacent jumper for continuous commoning, insulated, I_N 25 A, light gray ❸



1 to 3	**2002-423**	100 (4x25)

Modular TOPJOB® S connector, snaps together, for jumper contact slot ❸



gray	**2002-511**	100 (4x25)

Spacer module, snaps together, bridges commoned terminal blocks



gray	**2002-549**	100 (4x25)

End plate, for modular TOPJOB® S connector, 1.5 mm thick



gray	**2002-541**	100 (4x25)

Overview of certification organizations, see page 654

❶ Conductor range: 0.25 … 4 mm² "s + f-st";
Push-in termination: 0.75 … 4 mm² "s"
and 0.75 … 2.5 mm²
"insulated ferrules, 12 mm"

❷ 400 V = rated voltage
6 kV = rated surge voltage
3 = pollution degree
(see Section 14)

❸ See application notes for:
Colored push-in type jumper bar, page 134
Push-in type wire jumper, page 138
Staggered jumper, page 136
Adjacent jumper for continuous commoning, page 137
TOPJOB® S connector, page 128
TOPJOB® S L-type test plug module, page 132
Banana plug, page 330

Accessories

TOPJOB® S L-type test plug module, snaps together

❸ 

gray **2002-611** 100 (4x25)

Test plug adapter, for 4 mm Ø test plug



gray **2009-174** 100 (4x25)

Testing tap, for max. 2.5 mm²



gray **2009-182** 100 (4x25)

Banana plug, for 4 mm socket diameter, color mixed, 10 x

❸ 

orange, white, black, blue, yellow

215-111 50

Double-deck marker carrier, pivoting



gray **2002-121** 50 (2x25)

WMB Multi marking system, white, 10 strips with 10 markers per card, 5 … 5.2 mm stretchable

plain **793-5501** 5

WMB Inline, plain, 1,500 WMB markers (5 mm) per reel, 5 … 5.2 mm stretchable



white **2009-115** 1

Marking strip, plain, 11 mm wide, 50 m reel



white **2009-110** 1



Testing with voltage tester.



Carrier terminal block (2002-1661) with disconnect plug (2002-401) in parked position



Carrier terminal block (2002-1661) with disconnect plug (2002-401) in operating position

TOPJOB® S
Disconnect/Test Terminal Blocks and Through Terminal Blocks of Same Profile
2.5 (4) mm², 2002 Series

1

0.25 … 2.5 (4) mm² ❶ 400 V/6 kV/3 ❷ I_N 16 A	22 … 12 AWG 300 V, 15 A 300 V, 10 A	Terminal block width 5.2 mm / 0.205 inch 10 … 12 mm / 0.39 … 0.47 inch
0.25 … 2.5 (4) mm² ❶ 400 V/6 kV/3 ❷ I_N 16 A	22 … 12 AWG 300 V, 15 A	Terminal block width 5.2 mm / 0.205 inch 10 … 12 mm / 0.39 … 0.47 inch
0.25 … 2.5 (4) mm² ❶ 400 V/6 kV/3 ❷ I_N 16 A	22 … 12 AWG 300 V, 15 A 300 V, 10 A	Terminal block width 5.2 mm / 0.205 inch 10 … 12 mm / 0.39 … 0.47 inch

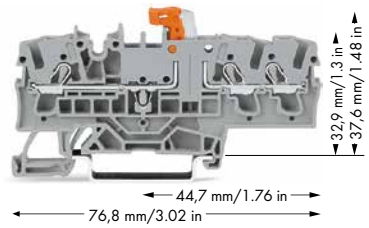

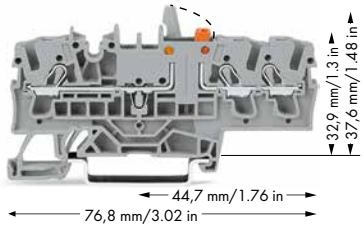

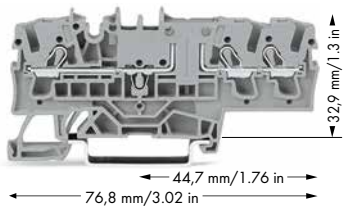

Item No.		Pack. Unit
3-conductor disconnect/test terminal block, with test point, orange disconnect link		
gray	**2002-1771**	50
blue	**2002-1774**	50
orange	**2002-1772**	50

Item No.		Pack. Unit
3-conductor disconnect/test terminal block, with mechanical interlock, with test point, orange disconnect link		
gray	**2002-1771/401-000**	50
blue	**2002-1774/401-000**	50
orange	**2002-1772/401-000**	50

Item No.		Pack. Unit
3-conductor through terminal block, with test point, same profile as 3-conductor disconnect terminal block		
gray	**2002-1701**	50
blue	**2002-1704**	50
orange	**2002-1702**	50
3-conductor ground terminal block		
green-yellow	**2002-1707**	50
Other terminal blocks with the same profile:		
Carrier	**2002-1761**	Page 96
Fuse	**2002-1781**	Page 70

2002 Series Accessories

Appropriate marking systems: WMB/WMB Inline/Marking strips (see Section 13)

End and intermediate plate, 1 mm thick			
	orange	**2002-1792**	100 (4x25)
	gray	**2002-1791**	100 (4x25)
Insulation stop, 5 pcs/strip, 0.25 … 0.5 mm²			
	light gray	**2002-171**	200 (8x25)
Insulation stop, 5 pcs/strip, 0.75 … 1 mm²			
	dark gray	**2002-172**	200 (8x25)
Push-in type jumper bar, insulated, I_N 25 A, light gray			
❸	2-way	**2002-402**	200 (8x25)
	3-way	**2002-403**	200 (8x25)
	4-way	**2002-404**	200 (8x25)
	5-way	**2002-405**	100 (4x25)
	6-way	**2002-406**	100 (4x25)
	7-way	**2002-407**	100 (4x25)
	8-way	**2002-408**	100 (4x25)
	9-way	**2002-409**	100 (4x25)
	10-way	**2002-410**	100 (4x25)
Push-in type wire jumper, insulated, wire size 1.5 mm², I_N 18 A			
❸	L = 60 mm	**2009-412**	100 (10x10)
	L = 110 mm	**2009-414**	100 (10x10)
	L = 250 mm	**2009-416**	100 (10x10)

Protective warning marker, with black high-voltage symbol, for 5 terminal blocks			
	yellow	**2002-115**	100 (4x25)
Push-in type jumper bar, insulated, I_N 25 A, light gray			
	from 1 to 3	**2002-433**	200 (8x25)
	from 1 to 4	**2002-434**	200 (8x25)
	from 1 to 5	**2002-435**	100 (4x25)
	from 1 to 6	**2002-436**	100 (4x25)
	from 1 to 7	**2002-437**	100 (4x25)
	from 1 to 8	**2002-438**	100 (4x25)
	from 1 to 9	**2002-439**	100 (4x25)
	from 1 to 10	**2002-440**	100 (4x25)
Staggered jumper, insulated, I_N 25 A, light gray			
❸	2-way	**2002-472**	100 (4x25)
	3-way	**2002-473**	100 (4x25)
	4-way	**2002-474**	100 (4x25)
	5-way	**2002-475**	50 (2x25)
	6-way	**2002-476**	50 (2x25)
	7-way	**2002-477**	50 (2x25)
	8-way	**2002-478**	50 (2x25)
	9-way	**2002-479**	50 (2x25)
	10-way	**2002-480**	50 (2x25)
	11-way	**2002-481**	50 (2x25)
	12-way	**2002-482**	50 (2x25)

Customized staggered jumper, insulated, with contact lugs broken off at the factory and circuit printing, I_N 25 A, light gray			
	1-3	**2002-473/011-000**	100 (4x25)
	1-3-5	**2002-475/011-000**	
	1-3-5-7	**2002-477/011-000**	
	1-3-5-7-9	**2002-479/011-000**	
	1-3-5-7-9-11	**2002-481/011-000**	50 (2x25)
Adjacent jumper for continuous commoning, insulated, I_N			
❸	25 A, light gray		
	2-way	**2002-400**	100 (4x25)
Adjacent jumper for continuous commoning, insulated, I_N			
❸	25 A, light gray		
	1 to 3	**2002-423**	100 (4x25)
Modular TOPJOB® S connector, snaps together, for jumper			
❸	contact slot		
	gray	**2002-511**	100 (4x25)
Spacer module, snaps together, bridges commoned terminal blocks			
	gray	**2002-549**	100 (4x25)
End plate, for modular TOPJOB® S connector, 1.5 mm thick			
	gray	**2002-541**	100 (4x25)

Overview of certification organizations, see page 654

❶ Conductor range: 0.25 … 4 mm² "s + f-st";
Push-in termination: 0.75 … 4 mm² "s"
and 0.75 … 2.5 mm²
"insulated ferrules, 12 mm"

❷ 400 V = rated voltage
6 kV = rated surge voltage
3 = pollution degree
(see Section 14)

❸ See application notes for:
Colored push-in type jumper bar, page 134
Push-in type wire jumper, page 138
Staggered jumper, page 136
Adjacent jumper for continuous commoning, page 137
TOPJOB® S connector, page 128
TOPJOB® S L-type test plug module, page 132
Banana plug, page 330

Accessories

TOPJOB® S L-type test plug module, snaps together

❸ 

gray	**2002-611**	100 (4x25)

Test plug adapter, for 4 mm Ø test plug



gray	**2009-174**	100 (4x25)

Testing tap, for max. 2.5 mm²



gray	**2009-182**	100 (4x25)

Banana plug, for 4 mm socket diameter, color mixed, 10 x

❸ 

orange, white, black, blue, yellow		
	215-111	50

Double-deck marker carrier, pivoting



gray	**2002-121**	50 (2x25)

WMB Multi marking system, white, 10 strips with 10 markers per card, 5 … 5.2 mm stretchable

plain	**793-5501**	5

WMB Inline, plain, 1,500 WMB markers (5 mm) per reel, 5 … 5.2 mm stretchable



white	**2009-115**	1

Marking strip, plain, 11 mm wide, 50 m reel



white	**2009-110**	1

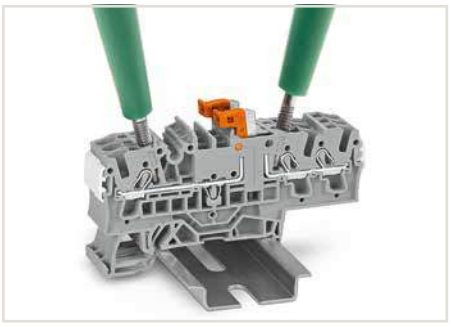

Disconnect/test terminal block with pivoting knife disconnect – testing with voltage tester.

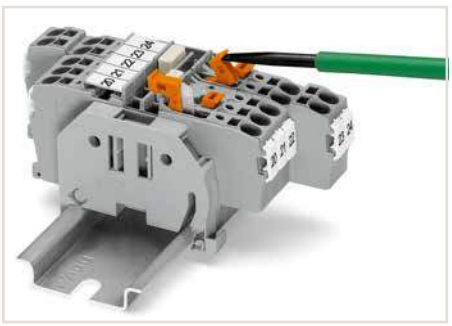

Disconnect/test terminal block with pivoting knife disconnect – opening the knife disconnect.



Disconnect/test terminal block with pivoting knife disconnect – closing the knife disconnect.

TOPJOB® S
Disconnect/Test Terminal Blocks and Through Terminal Blocks of Same Profile
2.5 (4) mm², 2002 Series

1

0.25 … 2.5 (4) mm² ❶ 400 V/6 kV/3 ❷ I_N 16 A	22 … 12 AWG 300 V, 15 A 300 V, 15 A	0.25 … 2.5 (4) mm² ❶ 400 V/6 kV/3 ❷ I_N 16 A	22 … 12 AWG 300 V, 15 A 300 V, 15 A	0.25 … 2.5 (4) mm² ❶ 400 V/6 kV/3 ❷ I_N 16 A	22 … 12 AWG 300 V, 15 A 300 V, 15 A
Terminal block width 5.2 mm / 0.205 inch 10 … 12 mm / 0.39 … 0.47 inch		Terminal block width 5.2 mm / 0.205 inch 10 … 12 mm / 0.39 … 0.47 inch		Terminal block width 5.2 mm / 0.205 inch 10 … 12 mm / 0.39 … 0.47 inch	

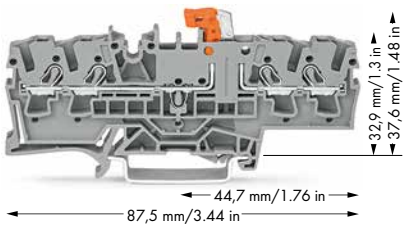

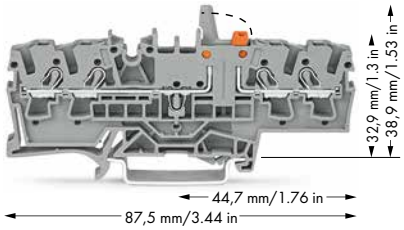

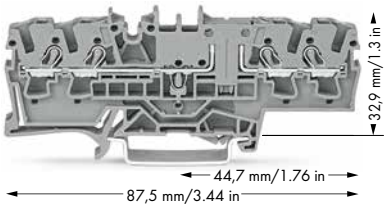

Item No.		Pack. Unit
4-conductor disconnect/test terminal block, with test point, orange disconnect link		
gray	**2002-1871**	50
blue	**2002-1874**	50
orange	**2002-1872**	50

Item No.		Pack. Unit
4-conductor disconnect/test terminal block, with mechanical interlock, with test point, orange disconnect link		
gray	**2002-1871/401-000**	50
blue	**2002-1874/401-000**	50
orange	**2002-1872/401-000**	50

Item No.		Pack. Unit
4-conductor through terminal block, with test point, same profile as 4-conductor disconnect terminal block		
gray	**2002-1801**	50
blue	**2002-1804**	50
orange	**2002-1802**	50
Other terminal blocks with the same profile:		
Carrier	**2002-1861**	Page 96
Fuse	**2002-1881**	Page 70

2002 Series Accessories

Appropriate marking systems: WMB/WMB Inline/Marking strips (see Section 13)

End and intermediate plate, 1 mm thick



orange	**2002-1892**	100 (4x25)
gray	**2002-1891**	100 (4x25)

Insulation stop, 5 pcs/strip, 0.25 … 0.5 mm²



light gray	**2002-171**	200 (8x25)

Insulation stop, 5 pcs/strip, 0.75 … 1 mm²



dark gray	**2002-172**	200 (8x25)

Push-in type jumper bar, insulated, I_N 25 A, light gray ❸



2-way	**2002-402**	200 (8x25)
3-way	**2002-403**	200 (8x25)
4-way	**2002-404**	200 (8x25)
5-way	**2002-405**	100 (4x25)
6-way	**2002-406**	100 (4x25)
7-way	**2002-407**	100 (4x25)
8-way	**2002-408**	100 (4x25)
9-way	**2002-409**	100 (4x25)
10-way	**2002-410**	100 (4x25)

Push-in type wire jumper, insulated, wire size 1.5 mm², I_N 18 A ❸



L = 60 mm	**2009-412**	100 (10x10)
L = 110 mm	**2009-414**	100 (10x10)
L = 250 mm	**2009-416**	100 (10x10)

Protective warning marker, with black high-voltage symbol, for 5 terminal blocks



yellow	**2002-115**	100 (4x25)

Push-in type jumper bar, insulated, I_N 25 A, light gray



from 1 to 3	**2002-433**	200 (8x25)
from 1 to 4	**2002-434**	200 (8x25)
from 1 to 5	**2002-435**	100 (4x25)
from 1 to 6	**2002-436**	100 (4x25)
from 1 to 7	**2002-437**	100 (4x25)
from 1 to 8	**2002-438**	100 (4x25)
from 1 to 9	**2002-439**	100 (4x25)
from 1 to 10	**2002-440**	100 (4x25)

Staggered jumper, insulated, I_N 25 A, light gray ❸



2-way	**2002-472**	100 (4x25)
3-way	**2002-473**	100 (4x25)
4-way	**2002-474**	100 (4x25)
5-way	**2002-475**	50 (2x25)
6-way	**2002-476**	50 (2x25)
7-way	**2002-477**	50 (2x25)
8-way	**2002-478**	50 (2x25)
9-way	**2002-479**	50 (2x25)
10-way	**2002-480**	50 (2x25)
11-way	**2002-481**	50 (2x25)
12-way	**2002-482**	50 (2x25)

Customized staggered jumper, insulated, with contact lugs broken off at the factory and circuit printing, I_N 25 A, light gray



1-3	**2002-473/011-000**	100 (4x25)
1-3-5	**2002-475/011-000**	
1-3-5-7	**2002-477/011-000**	
1-3-5-7-9	**2002-479/011-000**	
1-3-5-7-9-11	**2002-481/011-000**	50 (2x25)

Adjacent jumper for continuous commoning, insulated, I_N 25 A, light gray ❸

2-way	**2002-400**	100 (4x25)

Adjacent jumper for continuous commoning, insulated, I_N 25 A, light gray ❸



1 to 3	**2002-423**	100 (4x25)

Modular TOPJOB® S connector, snaps together, for jumper contact slot ❸



gray	**2002-511**	100 (4x25)

Spacer module, snaps together, bridges commoned terminal blocks



gray	**2002-549**	100 (4x25)

End plate, for modular TOPJOB® S connector, 1.5 mm thick



gray	**2002-541**	100 (4x25)

Overview of certification organizations, see page 654

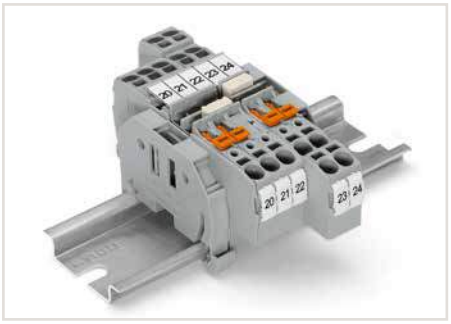

- One center and two side marker slots for WMB markers or marking strips
- Dual jumper slots in the same location as other 2002 Series terminal blocks
- Commoning options in front of or behind the knife disconnect, depending on the power supply direction

❶ Conductor range: 0.25 … 4 mm² "s + f-st";
Push-in termination: 0.75 … 4 mm² "s"
and 0.75 … 2.5 mm²
"insulated ferrules, 12 mm"

❷ 400 V = rated voltage
6 kV = rated surge voltage
3 = pollution degree
(see Section 14)

❸ See application notes for:
Colored push-in type jumper bar, page 134
Push-in type wire jumper, page 138
Staggered jumper, page 136
Adjacent jumper for continuous commoning, page 137
TOPJOB® S connector, page 128
TOPJOB® S L-type test plug module, page 132
Banana plug, page 330

Accessories

TOPJOB® S L-type test plug module, snaps together			
❸ 	gray	**2002-611**	100 (4x25)
Test plug adapter, for 4 mm Ø test plug			
	gray	**2009-174**	100 (4x25)
Testing tap, for max. 2.5 mm²			
	gray	**2009-182**	100 (4x25)
Banana plug, for 4 mm socket diameter, color mixed, 10 x			
❸ 	orange, white, black, blue, yellow	**215-111**	50
Double-deck marker carrier, pivoting			
	gray	**2002-121**	50 (2x25)
WMB Multi marking system, white, 10 strips with 10 markers per card, 5 … 5.2 mm stretchable			
	plain	**793-5501**	5
WMB Inline, plain, 1,500 WMB markers (5 mm) per reel, 5 … 5.2 mm stretchable			
	white	**2009-115**	1
Marking strip, plain, 11 mm wide, 50 m reel			
	white	**2009-110**	1



Disconnect/test terminal block with pivoting knife disconnect and mechanical interlock – knife disconnect in open position.



Disconnect/test terminal block with pivoting knife disconnect and mechanical interlock – top view

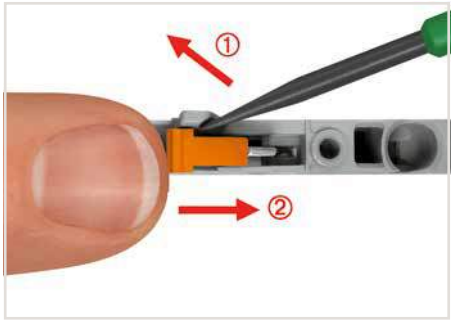

Disconnect/test terminal block with pivoting knife disconnect and mechanical interlock – closing the knife disconnect.

TOPJOB® S
Fuse terminal blocks for Mini-Automotive Blade-Style Fuses
2.5 (4) mm², 2002 Series

1

0.25 … 2.5 (4) mm² ❶	22 … 12 AWG
400 V/6 kV/3 ❷	300 V, 10 A
I_N 10 A ❸	300 V, 10 A

Terminal block width 5.2 mm / 0.205 inch
10 … 12 mm / 0.39 … 0.47 inch

0.25 … 2.5 (4) mm² ❶	22 … 12 AWG
400 V/6 kV/3 ❷	300 V, 10 A
I_N 10 A ❸	300 V, 10 A

Terminal block width 5.2 mm / 0.205 inch
10 … 12 mm / 0.39 … 0.47 inch

0.25 … 2.5 (4) mm² ❶	22 … 12 AWG
400 V/6 kV/3 ❷	300 V, 10 A
I_N 10 A ❸	300 V, 10 A

Terminal block width 5.2 mm / 0.205 inch
10 … 12 mm / 0.39 … 0.47 inch

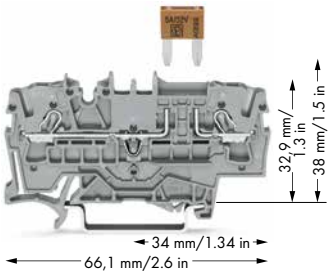

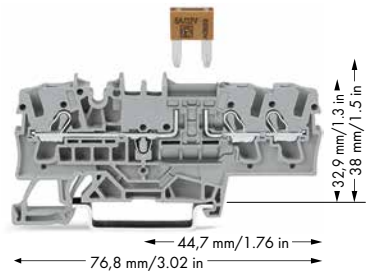

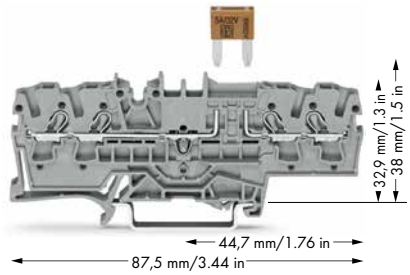

	Item No.	Pack. Unit
2-conductor fuse terminal block, with test point, for mini-automotive blade-style fuses		
gray	**2002-1681**	50
Blade-style fuses are not offered by WAGO		
Other terminal blocks with the same profile:		
Through	**2002-1601**	Page 64

	Item No.	Pack. Unit
3-conductor fuse terminal block, with test point, for mini-automotive blade-style fuses		
gray	**2002-1781**	50
Blade-style fuses are not offered by WAGO		
Other terminal blocks with the same profile:		
Through	**2002-1701**	Page 66

	Item No.	Pack. Unit
4-conductor fuse terminal block, with test point, for mini-automotive blade-style fuses		
gray	**2002-1881**	50
Blade-style fuses are not offered by WAGO		
Other terminal blocks with the same profile:		
Through	**2002-1801**	Page 68

Item-Specific Accessories

End and intermediate plate, 1 mm thick			
orange	**2002-1692**	100 (4x25)
gray	**2002-1691**	100 (4x25)

Item-Specific Accessories

End and intermediate plate, 1 mm thick			
orange	**2002-1792**	100 (4x25)
gray	**2002-1791**	100 (4x25)

Item-Specific Accessories

End and intermediate plate, 1 mm thick			
orange	**2002-1892**	100 (4x25)
gray	**2002-1891**	100 (4x25)

2002 Series Accessories

Appropriate marking systems: WMB/WMB Inline/Marking strips (see Section 13)

Insulation stop, 5 pcs/strip, 0.25 … 0.5 mm²			
light gray	**2002-171**	200 (8x25)

Insulation stop, 5 pcs/strip, 0.75 … 1 mm²			
dark gray	**2002-172**	200 (8x25)

Push-in type jumper bar, insulated, I_N 25 A, light gray ❹			
2-way	**2002-402**	200 (8x25)
3-way	**2002-403**	200 (8x25)
4-way	**2002-404**	200 (8x25)
5-way	**2002-405**	100 (4x25)
6-way	**2002-406**	100 (4x25)
7-way	**2002-407**	100 (4x25)
8-way	**2002-408**	100 (4x25)
9-way	**2002-409**	100 (4x25)
10-way	**2002-410**	100 (4x25)

Protective warning marker, with black high-voltage symbol, for 5 terminal blocks			
yellow	**2002-115**	100 (4x25)

Double-deck marker carrier, pivoting			
gray	**2002-121**	50 (2x25)

Push-in type jumper bar, insulated, I_N 25 A, light gray			
from 1 to 3	**2002-433**	200 (8x25)
from 1 to 4	**2002-434**	200 (8x25)
from 1 to 5	**2002-435**	100 (4x25)
from 1 to 6	**2002-436**	100 (4x25)
from 1 to 7	**2002-437**	100 (4x25)
from 1 to 8	**2002-438**	100 (4x25)
from 1 to 9	**2002-439**	100 (4x25)
from 1 to 10	**2002-440**	100 (4x25)

Staggered jumper, insulated, I_N 25 A, light gray ❹			
2-way	**2002-472**	100 (4x25)
3-way	**2002-473**	100 (4x25)
4-way	**2002-474**	100 (4x25)
5-way	**2002-475**	50 (2x25)
6-way	**2002-476**	50 (2x25)
7-way	**2002-477**	50 (2x25)
8-way	**2002-478**	50 (2x25)
9-way	**2002-479**	50 (2x25)
10-way	**2002-480**	50 (2x25)
11-way	**2002-481**	50 (2x25)
12-way	**2002-482**	50 (2x25)

Adjacent jumper for continuous commoning, insulated, I_N ❹ 25 A, light gray			
2-way	**2002-400**	100 (4x25)

Adjacent jumper for continuous commoning, insulated, I_N ❹ 25 A, light gray			
1 to 3	**2002-423**	100 (4x25)

Push-in type wire jumper, insulated, wire size 1.5 mm², I_N 18 A ❹			
L = 60 mm	**2009-412**	100 (10x10)
L = 110 mm	**2009-414**	100 (10x10)
L = 250 mm	**2009-416**	100 (10x10)

Overview of certification organizations, see page 654

PUSH-IN CAGE CLAMP®

TOPJOB® S
Safety Information

❶ Conductor range: 0.25 … 4 mm² "s + f-st";
Push-in termination: 0.75 … 4 mm² "s"
and 0.75 … 2.5 mm²
"insulated ferrules, 12 mm"

❷ 400 V = rated voltage
6 kV = rated surge voltage
3 = pollution degree
(see Section 14)

❸ Protection against direct contact must be observed for 42 V and higher voltages
- Individual arrangement: 10 A
- Block arrangement: 5 A

❹ See application notes for:
Colored push-in type jumper bar, page 134
Staggered jumper, page 136
Adjacent jumper for continuous commoning, page 137
Push-in type wire jumper, page 138
TOPJOB® S connector, page 128
TOPJOB® S L-type test plug module, page 132
Banana plug, page 330

Accessories

Modular TOPJOB® S connector, snaps together, for jumper contact slot ❹			
	gray	**2002-511**	100 (4x25)
Spacer module, snaps together, bridges commoned terminal blocks			
	gray	**2002-549**	100 (4x25)
End plate, for modular TOPJOB® S connector, 1.5 mm thick			
	gray	**2002-541**	100 (4x25)
TOPJOB® S L-type test plug module, snaps together ❹			
	gray	**2002-611**	100 (4x25)
Test plug adapter, for 4 mm Ø test plug			
	gray	**2009-174**	100 (4x25)
Banana plug, for 4 mm socket diameter, color mixed, 10 x ❹ orange, white, black, blue, yellow			
		215-111	50
Testing tap, for max. 2.5 mm²			
	gray	**2009-182**	100 (4x25)
Test plug, with 500 mm cable, 2 mm Ø, max. 42 V			
	red	**210-136**	50
WMB Multi marking system, white, 10 strips with 10 markers per card, 5 … 5.2 mm stretchable			
	plain	**793-5501**	5

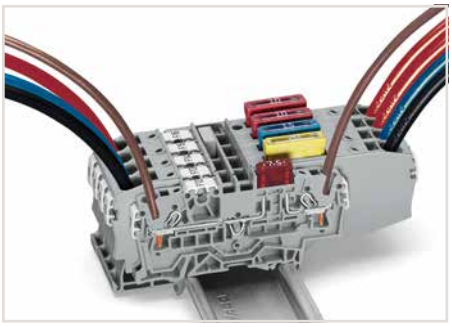

Selecting the correct fuse cartridge is important for product safety within applications, as well as for fuse cartridge service life and reliability. Fuse cartridges can operate perfectly as protection (break-off point) if they are properly selected and used according to manufacturer specifications.
Nominal current ratings for fuse cartridges are defined differently in international standards.
This is why the recommended continuous current-carrying capacity of the fuses a max. 80 % of their nominal current according to DIN 72581/Part 3 (for an ambient operating temperature of 23 °C).
With regard to product safety, fuse cartridges must generally be tested both under normal and faulty operating conditions within your application.

TOPJOB® S – Fused Disconnect Terminal Blocks with a Pivoting Fuse Holder for (5 x 20) mm Miniature Metric Fuses

2.5 (4) mm², 2002 Series

1

0.25 … 2.5 (4) mm² ❶ 250 V/6 kV/3 ❷ I_N 6.3 A	22 … 12 AWG 250 V, 6.3 A 250 V, 6.3 A	0.25 … 2.5 (4) mm² ❶ 250 V/6 kV/3 ❷ I_N 6.3 A	22 … 12 AWG 250 V, 6.3 A 250 V, 6.3 A	0.25 … 2.5 (4) mm² ❶ 250 V/6 kV/3 ❷ I_N 6.3 A	22 … 12 AWG 250 V, 6.3 A 250 V, 6.3 A
Terminal block width 6.2 mm / 0.244 inch 10 … 12 mm / 0.39 … 0.47 inch		Terminal block width 6.2 mm / 0.244 inch 10 … 12 mm / 0.39 … 0.47 inch		Terminal block width 6.2 mm / 0.244 inch 10 … 12 mm / 0.39 … 0.47 inch	

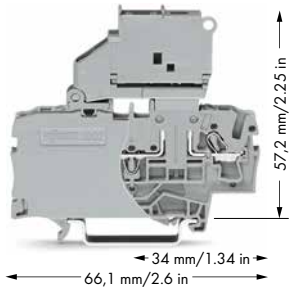

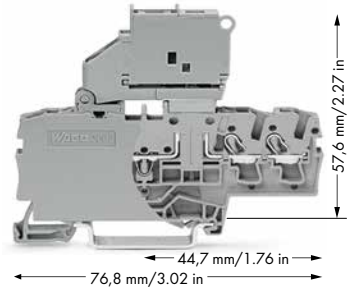

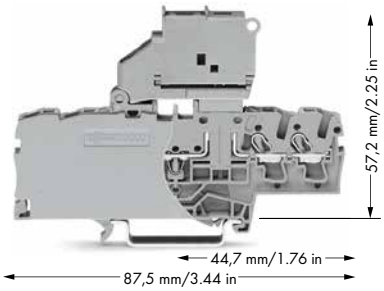

Item No.		Pack. Unit
2-conductor fused disconnect terminal block with a pivoting fuse holder, for (5 x 20) mm miniature metric fuse, without blown fuse indication		
Electrical ratings are given by the fuse.		
gray	**2002-1611**	50
2-conductor fused disconnect terminal block with a pivoting fuse holder, for (5 x 20) mm miniature metric fuse, with blown fuse indication by LED, gray		
Electrical ratings are given by the fuse and blown fuse indication. Leakage current in case of a blown fuse: LED 2 mA		
12 … 30 V	**2002-1611/1000-541**	50
30 … 65 V	**2002-1611/1000-542**	50
230 V	**2002-1611/1000-836**	50
120 V	**2002-1611/1000-867**	50
Other terminal blocks with the same profile:		
Through	**2002-1601**	Page 64

Item No.		Pack. Unit
3-conductor fused disconnect terminal block with a pivoting fuse holder, for (5 x 20) mm miniature metric fuse, without blown fuse indication		
Electrical ratings are given by the fuse.		
gray	**2002-1711**	50
3-conductor fused disconnect terminal block with a pivoting fuse holder, for (5 x 20) mm miniature metric fuse, with blown fuse indication by LED, gray		
Electrical ratings are given by the fuse and blown fuse indication. Leakage current in case of a blown fuse: LED 2 mA		
12 … 30 V	**2002-1711/1000-541**	50
30 … 65 V	**2002-1711/1000-542**	50
230 V	**2002-1711/1000-836**	50
120 V	**2002-1711/1000-867**	50
Other terminal blocks with the same profile:		
Through	**2002-1701**	Page 66

Item No.		Pack. Unit
4-conductor fused disconnect terminal block with a pivoting fuse holder, for (5 x 20) mm miniature metric fuse, without blown fuse indication		
Electrical ratings are given by the fuse.		
gray	**2002-1811**	50
4-conductor fused disconnect terminal block with a pivoting fuse holder, for (5 x 20) mm miniature metric fuse, with blown fuse indication by LED, gray		
Electrical ratings are given by the fuse and blown fuse indication. Leakage current in case of a blown fuse: LED 2 mA		
12 … 30 V	**2002-1811/1000-541**	50
30 … 65 V	**2002-1811/1000-542**	50
230 V	**2002-1811/1000-836**	50
120 V	**2002-1811/1000-867**	50
Other terminal blocks with the same profile:		
Through	**2002-1801**	Page 68

Accessories

Appropriate marking systems: WMB/Marking strips (see Section 13)

End plate for fuse terminal blocks, 2 mm thick			
orange	**2002-992**	100 (4x25)	
gray	**2002-991**	100 (4x25)	
Insulation stop, 5 pcs/strip, 0.25 … 0.5 mm²			
light gray	**2002-171**	200 (8x25)	
Insulation stop, 5 pcs/strip, 0.75 … 1 mm²			
dark gray	**2002-172**	200 (8x25)	
Push-in type wire jumper, insulated, wire size 1.5 mm², I_N 18 A ❸			
L = 60 mm	**2009-412**	100 (10x10)	
L = 110 mm	**2009-414**	100 (10x10)	
L = 250 mm	**2009-416**	100 (10x10)	

Push-in type jumper bar, insulated, I_N 32 A, light gray			
2-way	**2004-402**	200 (8x25)	
3-way	**2004-403**	200 (8x25)	
4-way	**2004-404**	100 (4x25)	
5-way	**2004-405**	100 (4x25)	
6-way	**2004-406**	100 (4x25)	
7-way	**2004-407**	100 (4x25)	
8-way	**2004-408**	100 (4x25)	
9-way	**2004-409**	100 (4x25)	
10-way	**2004-410**	100 (4x25)	
Protective warning marker, with black high-voltage symbol, for 5 terminal blocks			
yellow	**2002-115**	100 (4x25)	

Push-in type jumper bar, insulated, I_N 32 A, light gray			
from 1 to 3	**2004-433**	200 (8x25)	
from 1 to 4	**2004-434**	200 (8x25)	
from 1 to 5	**2004-435**	100 (4x25)	
from 1 to 6	**2004-436**	100 (4x25)	
from 1 to 7	**2004-437**	100 (4x25)	
from 1 to 8	**2004-438**	100 (4x25)	
from 1 to 9	**2004-439**	100 (4x25)	
from 1 to 10	**2004-440**	100 (4x25)	

Overview of certification organizations, see page 654



Fuse terminal blocks with a width of 6.2 mm can be assembled adjacently. If there is no adjacent fuse terminal block at the end of the assembly, an end plate must be used.

❶ Conductor range: 0.25 … 4 mm² "s + f-st"; Push-in termination: 0.75 … 4 mm² "s" and 0.75 … 2.5 mm² "insulated ferrule, 12 mm"

❷ 250 V = rated voltage
6 kV = rated surge voltage
3 = pollution degree
(see Section 14)

❸ See application notes for:
Push-in type wire jumper, page 138

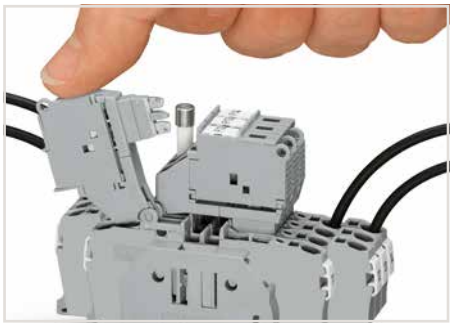

Fused disconnect terminal block with a pivoting fuse holder
Pivoting the fuse holder in the locked open position.

Miniature fuses 5 x 20

Series Item No.	Overload and short circuit protection		Short circuit protection only	
	Individual argmt.	Group argmt.	Individual argmt.	Group argmt.
	Fuse terminal blocks			
2002-1611 **2002-1811**	1.6 W	1.6 W	2.5 W	2.5 W
2002-1611/….-…. **2002-1811/….-….**	1.6 W	1.6 W	2.5 W	2.5 W

When selecting miniature metric fuses, make sure that the maximum power loss listed above is not exceeded. The power loss is determined according to IEC or EN 60947-7-3/VDE 0611-6 at 23 °C. The temperature rise of the terminal blocks must be checked according to their application and mounting. Higher ambient temperatures place additional strain on fuse cartridges. Therefore, in such applications, the rated current must be reduced if necessary. More details are available from the fuse manufacturers.



Fused disconnect terminal block with a pivoting fuse holder – replacing a fuse.

TOPJOB® S – Disconnect/Test Terminal Blocks and Through/Ground Terminal Blocks with Additional Jumper Slot

2.5 (4) mm², 2002 Series

1

0.25 … 2.5 (4) mm² ❶ 400 V/6 kV/3 ❷ I_N 16 A	22 … 12 AWG 300 V, 15 A	
Terminal block width 5.2 mm / 0.205 inch 10 … 12 mm / 0.39 … 0.47 inch		

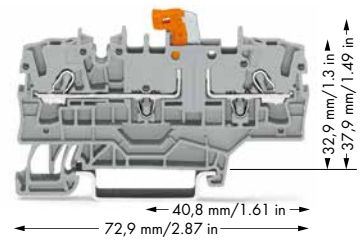

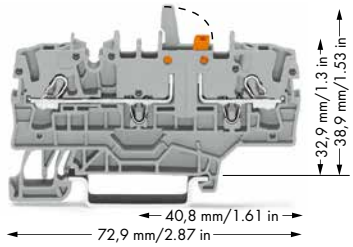

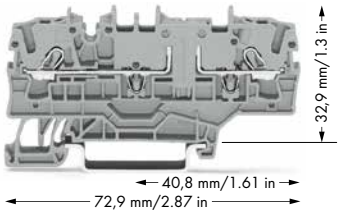

Item No.		Pack. Unit
2-conductor disconnect/test terminal block, with test point, orange disconnect link and additional jumper slot		
gray	**2002-1971**	50
blue	**2002-1974**	50
orange	**2002-1972**	50

Item No.		Pack. Unit
2-conductor disconnect/test terminal block, with mechanical interlock, with test point, orange disconnect link and additional jumper slot		
gray	**2002-1971/401-000**	50
orange	**2002-1972/401-000**	50
blue	**2002-1974/401-000**	50

Item No.		Pack. Unit
2-conductor through terminal block, with test point and additional jumper slot, same profile as 2-conductor disconnect terminal block		
gray	**2002-1901**	50
blue	**2002-1904**	50
orange	**2002-1902**	50
2-conductor ground terminal block		
green-yellow	**2002-1907**	50
Other terminal blocks with the same profile:		
Carrier	**2002-1961**	Page 96
Fuse	**2002-1981**	Page 77

2002 Series Accessories

Appropriate marking systems: WMB/WMB Inline/Marking strips (see Section 13)

End and intermediate plate, 1 mm thick			
	orange	**2002-1992**	100 (4x25)
	gray	**2002-1991**	100 (4x25)
Insulation stop, 5 pcs/strip, 0.25 … 0.5 mm²			
	light gray	**2002-171**	200 (8x25)
Insulation stop, 5 pcs/strip, 0.75 … 1 mm²			
	dark gray	**2002-172**	200 (8x25)
Push-in type jumper bar, insulated, I_N 25 A, light gray			
❸	2-way	**2002-402**	200 (8x25)
	3-way	**2002-403**	200 (8x25)
	4-way	**2002-404**	200 (8x25)
	5-way	**2002-405**	100 (4x25)
	6-way	**2002-406**	100 (4x25)
	7-way	**2002-407**	100 (4x25)
	8-way	**2002-408**	100 (4x25)
	9-way	**2002-409**	100 (4x25)
	10-way	**2002-410**	100 (4x25)
Push-in type wire jumper, insulated, wire size 1.5 mm²,			
❸	I_N 18 A		
	L = 60 mm	**2009-412**	100 (10x10)
	L = 110 mm	**2009-414**	100 (10x10)
	L = 250 mm	**2009-416**	100 (10x10)

Protective warning marker, with black high-voltage symbol, for 5 terminal blocks			
	yellow	**2002-115**	100 (4x25)
Push-in type jumper bar, insulated, I_N 25 A, light gray			
	from 1 to 3	**2002-433**	200 (8x25)
	from 1 to 4	**2002-434**	200 (8x25)
	from 1 to 5	**2002-435**	100 (4x25)
	from 1 to 6	**2002-436**	100 (4x25)
	from 1 to 7	**2002-437**	100 (4x25)
	from 1 to 8	**2002-438**	100 (4x25)
	from 1 to 9	**2002-439**	100 (4x25)
	from 1 to 10	**2002-440**	100 (4x25)
Staggered jumper, insulated, I_N 25 A, light gray			
❸	2-way	**2002-472**	100 (4x25)
	3-way	**2002-473**	100 (4x25)
	4-way	**2002-474**	100 (4x25)
	5-way	**2002-475**	50 (2x25)
	6-way	**2002-476**	50 (2x25)
	7-way	**2002-477**	50 (2x25)
	8-way	**2002-478**	50 (2x25)
	9-way	**2002-479**	50 (2x25)
	10-way	**2002-480**	50 (2x25)
	11-way	**2002-481**	50 (2x25)
	12-way	**2002-482**	50 (2x25)

Customized staggered jumper, insulated, with contact lugs broken off at the factory and circuit printing, I_N 25 A, light gray			
	1-3	**2002-473/011-000**	100 (4x25)
	1-3-5	**2002-475/011-000**	
	1-3-5-7	**2002-477/011-000**	
	1-3-5-7-9	**2002-479/011-000**	
	1-3-5-7-9-11	**2002-481/011-000**	50 (2x25)
Adjacent jumper for continuous commoning, insulated, I_N			
❸	25 A, light gray		
	2-way	**2002-400**	100 (4x25)
Adjacent jumper for continuous commoning, insulated, I_N			
❸	25 A, light gray		
	1 to 3	**2002-423**	100 (4x25)
Modular TOPJOB® S connector, snaps together, for jumper			
❸	contact slot		
	gray	**2002-511**	100 (4x25)
Spacer module, snaps together, bridges commoned terminal blocks			
	gray	**2002-549**	100 (4x25)
End plate, for modular TOPJOB® S connector, 1.5 mm thick			
	gray	**2002-541**	100 (4x25)

Overview of certification organizations, see page 654

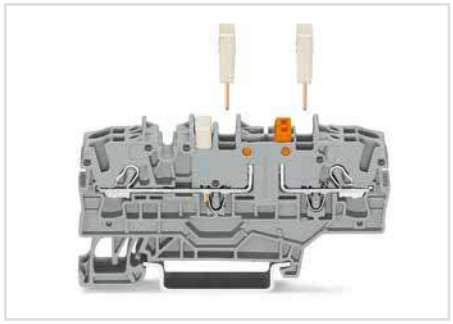

Three jumper slots available

❶ Conductor range: 0.25 … 4 mm² "s + f-st";
Push-in termination: 0.75 … 4 mm² "s"
and 0.75 … 2.5 mm²
"insulated ferrules, 12 mm"

❷ 400 V = rated voltage
6 kV = rated surge voltage
3 = pollution degree
(see Section 14)

❸ See application notes for:
Colored push-in type jumper bar, page 134
Push-in type wire jumper, page 138
Staggered jumper, page 136
Adjacent jumper for continuous commoning, page 137
TOPJOB® S connector, page 128
TOPJOB® S L-type test plug module, page 132
Banana plug, page 330

Accessories

TOPJOB® S L-type test plug module, snaps together

❸ 

gray **2002-611** 100 (4x25)

Test plug adapter, for 4 mm Ø test plug



gray **2009-174** 100 (4x25)

Testing tap, for max. 2.5 mm²



gray **2009-182** 100 (4x25)

Banana plug, for 4 mm socket diameter, color mixed, 10 x

❸ 

orange, white, black, blue, yellow

215-111 50

Double-deck marker carrier, pivoting



gray **2002-121** 50 (2x25)

WMB Multi marking system, white, 10 strips with 10 markers per card, 5 … 5.2 mm stretchable

plain **793-5501** 5

WMB Inline, plain, 1,500 WMB markers (5 mm) per reel, 5 … 5.2 mm stretchable



white **2009-115** 1

Marking strip, plain, 11 mm wide, 50 m reel



white **2009-110** 1



Disconnect/test terminal block with pivoting knife disconnect and mechanical interlock – knife disconnect in open position



Disconnect/test terminal block with pivoting knife disconnect and mechanical interlock – top view

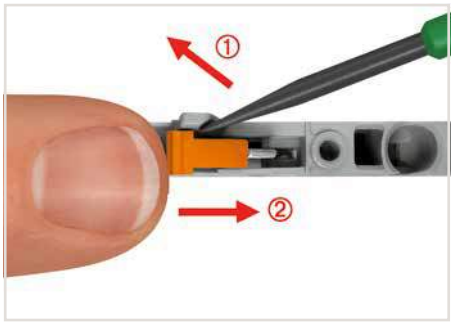

Disconnect/test terminal block with pivoting knife disconnect and mechanical interlock – closing the knife disconnect.

TOPJOB® S – Fuse Terminal Blocks with Additional Jumper Slot for Mini-Automotive Blade-Style Fuses

2.5 (4) mm², 2002 Series

1

0.25 … 2.5 (4) mm² ❶ 400 V/6 kV/3 ❷ I_N 10 A	22 … 12 AWG 12 V, 10 A	Terminal block width 5.2 mm / 0.205 inch 10 … 12 mm / 0.39 … 0.47 inch
0.25 … 2.5 (4) mm² ❶ 400 V/6 kV/3 ❷ I_N 10 A	22 … 12 AWG 24 V, 10 A	Terminal block width 5.2 mm / 0.205 inch 10 … 12 mm / 0.39 … 0.47 inch
0.25 … 2.5 (4) mm² ❶ 400 V/6 kV/3 ❷ I_N 10 A	22 … 12 AWG 48 V, 10 A	Terminal block width 5.2 mm / 0.205 inch 10 … 12 mm / 0.39 … 0.47 inch

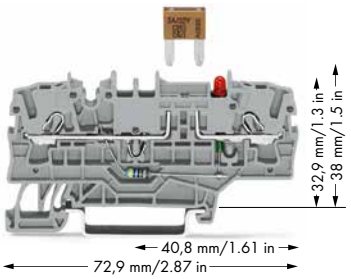

2002-1981/1000-429 2002-1981/1000-449

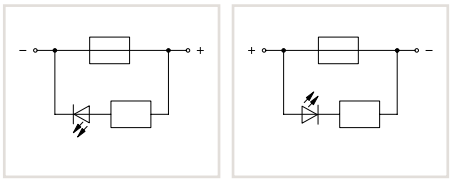

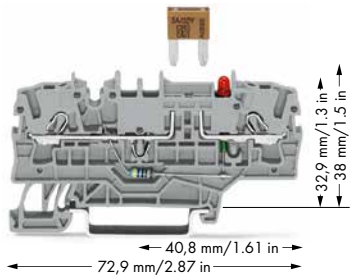

2002-1981/1000-413 2002-1981/1000-434

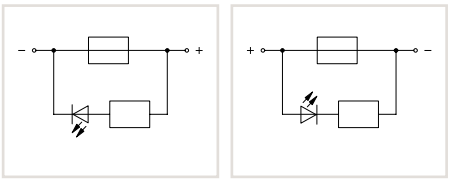

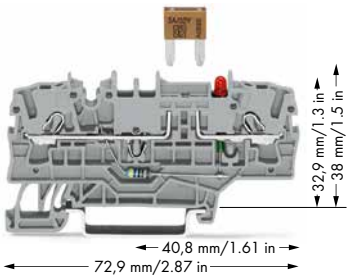

2002-1981/1000-414 2002-1981/1000-435

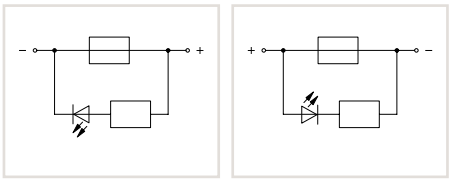

Item No.	Pack. Unit
2-conductor fuse terminal block, with test option, for mini-automotive blade-style fuses, 12 V, with blown fuse indication by LED, power consumption LED: 4.8 mA	
Electrical ratings are given by the fuse and blown fuse indication. Blade-style fuses: Observe touch-proof protection for 42 V and higher voltages!	
◯ gray **2002-1981/1000-429**	50
◯ gray **2002-1981/1000-449**	50
Other terminal blocks with the same profile:	
Through **2002-1901**	Page 74

Item No.	Pack. Unit
2-conductor fuse terminal block, with test option, for mini-automotive blade-style fuses, 24 V, with blown fuse indication by LED, power consumption LED: 4.8 mA	
Electrical ratings are given by the fuse and blown fuse indication. Blade-style fuses: Observe touch-proof protection for 42 V and higher voltages!	
◯ gray **2002-1981/1000-413**	50
◯ gray **2002-1981/1000-434**	50

Item No.	Pack. Unit
2-conductor fuse terminal block, with test option, for mini-automotive blade-style fuses, 48 V, with blown fuse indication by LED, power consumption LED: 4.8 mA	
Electrical ratings are given by the fuse and blown fuse indication. Blade-style fuses: Observe touch-proof protection for 42 V and higher voltages!	
◯ gray **2002-1981/1000-414**	50
◯ gray **2002-1981/1000-435**	50

2002 Series Accessories

Appropriate marking systems: WMB/WMB Inline/Marking strips (see Section 13)

End and intermediate plate, 1 mm thick



orange	**2002-1992**	100 (4x25)
gray	**2002-1991**	100 (4x25)

Insulation stop, 5 pcs/strip, 0.25 … 0.5 mm²



light gray	**2002-171**	200 (8x25)

Insulation stop, 5 pcs/strip, 0.75 … 1 mm²



dark gray	**2002-172**	200 (8x25)

Push-in type jumper bar, insulated, I_N 25 A, light gray ❸



2-way	**2002-402**	200 (8x25)
3-way	**2002-403**	200 (8x25)
4-way	**2002-404**	200 (8x25)
5-way	**2002-405**	100 (4x25)
6-way	**2002-406**	100 (4x25)
7-way	**2002-407**	100 (4x25)
8-way	**2002-408**	100 (4x25)
9-way	**2002-409**	100 (4x25)
10-way	**2002-410**	100 (4x25)

Protective warning marker, with black high-voltage symbol, for 5 terminal blocks



yellow	**2002-115**	100 (4x25)

Push-in type wire jumper, insulated, wire size 1.5 mm², I_N 18 A ❸



L = 60 mm	**2009-412**	100 (10x10)
L = 110 mm	**2009-414**	100 (10x10)
L = 250 mm	**2009-416**	100 (10x10)

Push-in type jumper bar, insulated, I_N 25 A, light gray



from 1 to 3	**2002-433**	200 (8x25)
from 1 to 4	**2002-434**	200 (8x25)
from 1 to 5	**2002-435**	100 (4x25)
from 1 to 6	**2002-436**	100 (4x25)
from 1 to 7	**2002-437**	100 (4x25)
from 1 to 8	**2002-438**	100 (4x25)
from 1 to 9	**2002-439**	100 (4x25)
from 1 to 10	**2002-440**	100 (4x25)

Staggered jumper, insulated, I_N 25 A, light gray ❸



2-way	**2002-472**	100 (4x25)
3-way	**2002-473**	100 (4x25)
4-way	**2002-474**	100 (4x25)
5-way	**2002-475**	50 (2x25)
6-way	**2002-476**	50 (2x25)
7-way	**2002-477**	50 (2x25)
8-way	**2002-478**	50 (2x25)
9-way	**2002-479**	50 (2x25)
10-way	**2002-480**	50 (2x25)
11-way	**2002-481**	50 (2x25)
12-way	**2002-482**	50 (2x25)

Adjacent jumper for continuous commoning, insulated, I_N ❸



25 A, light gray		
2-way	**2002-400**	100 (4x25)

Adjacent jumper for continuous commoning, insulated, I_N ❸



25 A, light gray		
1 to 3	**2002-423**	100 (4x25)

0.25 ... 2.5 (4) mm² ❶ | **22 ... 12 AWG**
400 V/6 kV/3 ❷ | **250 V, 10 A**
I_N 10 A

Terminal block width 5.2 mm / 0.205 inch
10 ... 12 mm / 0.39 ... 0.47 inch

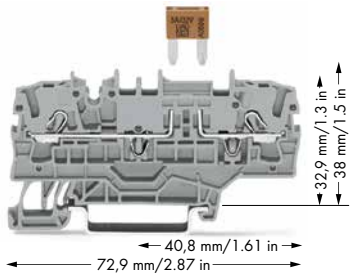

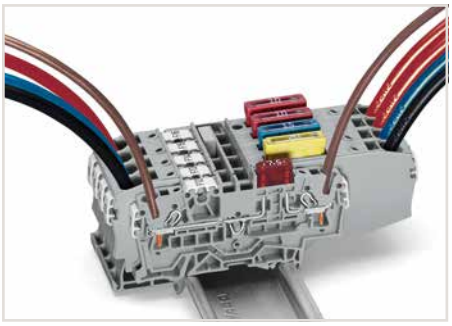

Selecting the correct fuse cartridge is important for product safety within applications, as well as for fuse cartridge service life and reliability. Fuse cartridges can operate perfectly as protection (break-off point) if they are properly selected and used according to manufacturer specifications.
Nominal current ratings for fuse cartridges are defined differently in international standards.
This is why the recommended continuous current-carrying capacity of the fuses a max. 80 % of their nominal current according to DIN 72581/Part 3 (for an ambient operating temperature of 23 °C).
With regard to product safety, fuse cartridges must generally be tested both under normal and faulty operating conditions within your application.

❶ Conductor range: 0.25 ... 4 mm² "s + f-st";
Push-in termination: 0.75 ... 4 mm² "s"
and 0.75 ... 2.5 mm²
"insulated ferrules, 12 mm"

❷ 400 V = rated voltage
6 kV = rated surge voltage
3 = pollution degree
(see Section 14)

❸ See application notes for:
Colored push-in type jumper bar, page 134
Push-in type wire jumper, page 138
Staggered jumper, page 136
Adjacent jumper for continuous commoning, page 137

	Item No.	Pack. Unit
2-conductor fuse terminal block, with test option, for mini-automotive blade-style fuses, with additional jumper position, without blown fuse indication Electrical ratings are given by the fuse. Blade-style fuses: Observe touch-proof protection for 42 V and higher voltages!		
◯ gray	**2002-1981**	50
Blade-style fuses are not offered by WAGO		
WMB Inline, plain, 1,500 WMB markers (5 mm) per reel, 5 ... 5.2 mm stretchable		
white	**2009-115**	1
WMB Multi marking system, white, 10 strips with 10 markers per card, 5 ... 5.2 mm stretchable		
plain	**793-5501**	5
Double-deck marker carrier, pivoting		
gray	**2002-121**	50 (2x25)

PUSH-IN CAGE CLAMP®

TOPJOB® S – Fused Disconnect Terminal Blocks with a Pivoting Fuse Holder for 5 x 20 mm Miniature Metric Fuses and Additional Jumper Slot

2.5 (4) mm², 2002 Series

1

0.25 … 2.5 (4) mm² ❶ | 22 … 12 AWG 250 V/6 kV/3 ❷ | 600 V, 6,3 A I_N 6.3 A Terminal block width 6.2 mm / 0.244 inch 10 … 12 mm / 0.39 … 0.47 inch	0.25 … 2.5 (4) mm² ❶ | 22 … 12 AWG 250 V/6 kV/3 ❷ | 30 V, 6,3 A I_N 6.3 A Terminal block width 6.2 mm / 0.244 inch 10 … 12 mm / 0.39 … 0.47 inch

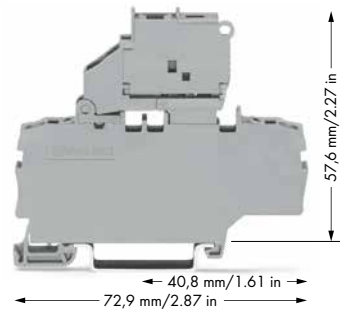

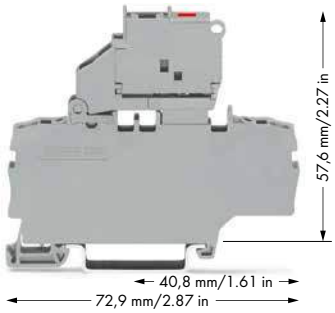

❶ Conductor range: 0.25 … 4 mm² "s + f-st"; Push-in termination: 0.75 … 4 mm² "s" and 0.75 … 2.5 mm² "insulated ferrule, 12 mm"

❷ 250 V = rated voltage
6 kV = rated surge voltage
3 = pollution degree
(see Section 14)

❸ See application notes for: Push-in type wire jumper, page 138

	Item No.	Pack. Unit
2-conductor fused disconnect terminal block with a pivoting fuse holder for (5 x 20) mm miniature metric fuse, with additional jumper slot, without blown fuse indication Electrical ratings are given by the fuse.		
gray	**2002-1911**	50
Other terminal blocks with the same profile:		
Through	**2002-1901**	Page 74

	Item No.	Pack. Unit
2-conductor fused disconnect terminal block with a pivoting fuse holder for (5 x 20) mm miniature metric fuse, with additional jumper slot, with blown fuse indication by LED, gray Electrical ratings are given by the fuse and blown fuse indication. Leakage current in case of a blown fuse: LED 2 mA		
12 … 30 V	**2002-1911/1000-541**	50
30 … 65 V	**2002-1911/1000-542**	50
120 V	**2002-1911/1000-867**	50
230 V	**2002-1911/1000-836**	50

Miniature fuses 5 x 20

Series Item No.	Overload and short circuit protection		Short circuit protection only	
	Individual argmt.	Group argmt.	Individual argmt.	Group argmt.
	Fuse terminal blocks			
2002-1911	1.6 W	1.6 W	2.5 W	2.5 W
2002-1911/….-….	1.6 W	1.6 W	2.5 W	2.5 W

When selecting miniature metric fuses, make sure that the maximum power loss listed above is not exceeded. The power loss is determined according to IEC or EN 60947-7-3/VDE 0611-6 at 23 °C. The temperature rise of the terminal blocks must be checked according to their application and mounting. Higher ambient temperatures place additional strain on fuse cartridges. Therefore, in such applications, the rated current must be reduced if necessary. More details are available from the fuse manufacturers.

2002 Series Accessories

Appropriate marking systems: WMB/Marking strips
(see Section 13)

End plate for fuse terminal blocks, 2 mm thick



orange	**2002-992**	100 (4x25)
gray	**2002-991**	100 (4x25)

Insulation stop, 5 pcs/strip, 0.25 … 0.5 mm²



light gray	**2002-171**	200 (8x25)

Insulation stop, 5 pcs/strip, 0.75 … 1 mm²



dark gray	**2002-172**	200 (8x25)

Push-in type jumper bar, insulated, I_N 32 A, light gray



2-way	**2004-402**	200 (8x25)
3-way	**2004-403**	200 (8x25)
4-way	**2004-404**	100 (4x25)
5-way	**2004-405**	100 (4x25)
6-way	**2004-406**	100 (4x25)
7-way	**2004-407**	100 (4x25)
8-way	**2004-408**	100 (4x25)
9-way	**2004-409**	100 (4x25)
10-way	**2004-410**	100 (4x25)

Push-in type jumper bar, insulated, I_N 32 A, light gray



from 1 to 3	**2004-433**	200 (8x25)
from 1 to 4	**2004-434**	200 (8x25)
from 1 to 5	**2004-435**	100 (4x25)
from 1 to 6	**2004-436**	100 (4x25)
from 1 to 7	**2004-437**	100 (4x25)
from 1 to 8	**2004-438**	100 (4x25)
from 1 to 9	**2004-439**	100 (4x25)
from 1 to 10	**2004-440**	100 (4x25)

Push-in type wire jumper, insulated, wire size 1.5 mm², ❸



I_N 18 A

L = 60 mm	**2009-412**	100 (10x10)
L = 110 mm	**2009-414**	100 (10x10)
L = 250 mm	**2009-416**	100 (10x10)

Protective warning marker, with black high-voltage symbol, for 5 terminal blocks



yellow	**2002-115**	100 (4x25)

Test plug, with 500 mm cable, 2 mm Ø, max. 42 V



red	**210-136**	50

A protective warning marker and an insulation stop must be applied individually. Due to the 6.2 mm width of fuse disconnect terminal blocks with pivoting fuse holder, 2004 Series Push-In Type Jumper Bars must be used.

TOPJOB® S – Disconnect and Ground Conductor Disconnect Terminal Blocks (30 A) and Through Terminal Blocks of Same Profile

6 (10) mm², 2006 Series

1

0.5 … 6 (10) mm² ❶	20 … 8 AWG	
800 V/8 kV/3 ❷	600 V, 15 A	
I_N 30 A	600 V, 30 A	
Terminal block width 7.5 mm / 0.295 inch		
13 … 15 mm / 0.51 … 0.59 inch		

0.5 … 6 (10) mm² ❶	20 … 8 AWG	
800 V/8 kV/3 ❷	600 V, 30 A	
I_N 30 A	600 V, 30 A	
Terminal block width 7.5 mm / 0.295 inch		
13 … 15 mm / 0.51 … 0.59 inch		

0.5 … 6 (10) mm² ❶	20 … 8 AWG
Terminal block width 15 mm / 0.591 inch	
13 … 15 mm / 0.51 … 0.59 inch	

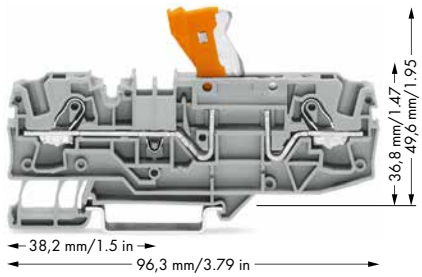

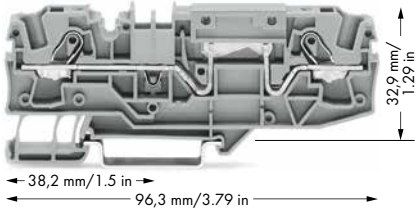

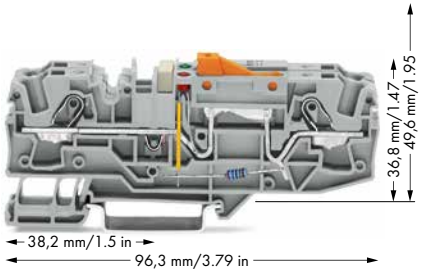

	Item No.	Pack. Unit
2-conductor disconnect terminal block, with test point, orange disconnect link		
gray	**2006-1671**	25
blue	**2006-1674**	25
Other terminal blocks with the same profile:		
Through	**2006-1601**	Page 80

	Item No.	Pack. Unit
2-conductor through terminal block, with test point, same profile as 2-conductor disconnect terminal block		
gray	**2006-1601**	25
blue	**2006-1604**	25
Other terminal blocks with the same profile:		
Carrier	**2006-1661**	Page 98
Fuse	**2006-1681**	Page 82

	Item No.	Pack. Unit
Ground conductor disconnect terminal block, with test point, orange disconnect link, gray		
24 V	**2006-1671/1000-848**	12
48 V	**2006-1671/1000-849**	12
120 V	**2006-1671/1000-850**	12
230 V	**2006-1671/1000-851**	12
Other terminal blocks with the same profile:		
Through	**2006-1601**	Page 80

Item-Specific Accessories

Push-in type jumper bar, insulated, I_N 41 A, light gray



2-way	**2006-402**	50 (2x25)
3-way	**2006-403**	50 (2x25)
4-way	**2006-404**	50 (2x25)
5-way	**2006-405**	50 (2x25)

Push-in type jumper bar, insulated, I_N 41 A, light gray



from 1 to 3	**2006-433**	50 (2x25)
from 1 to 4	**2006-434**	50 (2x25)
from 1 to 5	**2006-435**	50 (2x25)

Star point jumper, insulated, I_N = I_N terminal block, light gray



1-3-5	**2006-405/011-000**	50 (2x25)

Item-Specific Accessories

Push-in type jumper bar, insulated, I_N 41 A, light gray



2-way	**2006-402**	50 (2x25)
3-way	**2006-403**	50 (2x25)
4-way	**2006-404**	50 (2x25)
5-way	**2006-405**	50 (2x25)

Push-in type jumper bar, insulated, I_N 41 A, light gray



from 1 to 3	**2006-433**	50 (2x25)
from 1 to 4	**2006-434**	50 (2x25)
from 1 to 5	**2006-435**	50 (2x25)

Star point jumper, insulated, I_N = I_N terminal block, light gray



1-3-5	**2006-405/011-000**	50 (2x25)

Disconnect plug for carrier terminal blocks, suitable when using a carrier terminal block as disconnect terminal block



orange	**2006-401**	100 (4x25)

Blind plug for carrier terminal blocks, indicates a disconnection



red	**2006-451**	100 (4x25)

Item-Specific Accessories

Push-in type jumper bar, insulated, I_N 41 A, light gray



2-way	**2006-402**	50 (2x25)

2006 Series Accessories

Appropriate marking systems: WMB/Marking strips (see Section 13)

End and intermediate plate, 1 mm thick



orange	**2006-1692**	100 (4x25)
gray	**2006-1691**	100 (4x25)

Double-deck marker carrier, pivoting



gray	**2002-121**	50 (2x25)

Protective warning marker, with black high-voltage symbol, for 5 terminal blocks



yellow	**2006-115**	100 (4x25)

Overview of certification organizations, see page 654

PUSH-IN CAGE CLAMP®

TOPJOB® S
Disconnect and Ground Conductor Disconnect Terminal Blocks



Ground conductor disconnect terminal block – top view

❶ Conductor range: 0.5 … 10 mm² "s + f-st";
Push-in termination: 1 … 10 mm² "s"
and 1.5 … 6 mm²
"insulated ferrule, 12 mm"

❷ 800 V = rated voltage
8 kV = rated surge voltage
3 = pollution degree
(see Section 14)

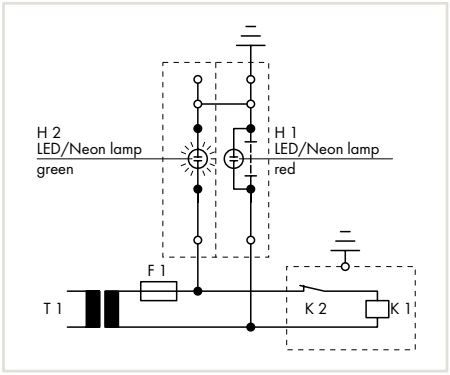

Operating condition
Slide link closed, auxiliary circuit grounded, green LED/ neon lamp illuminates.

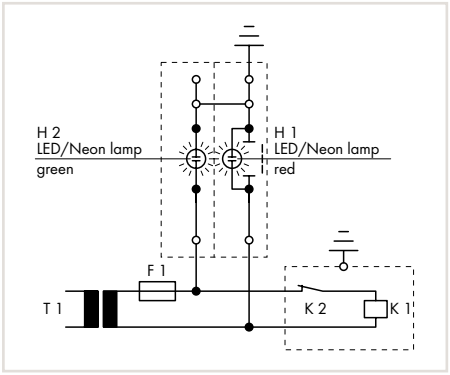

Test condition – no grounding
Slide link open, auxiliary circuit not grounded.

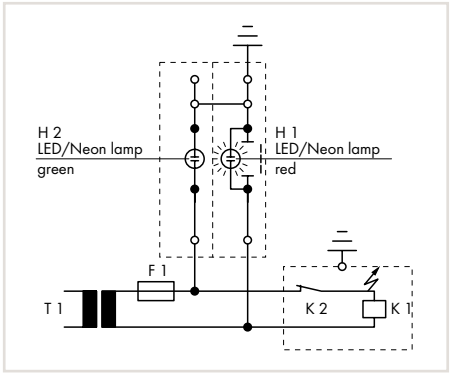

Test condition – grounding
Slide link open, auxiliary circuit not grounded, red LED/ neon lamp illuminates.

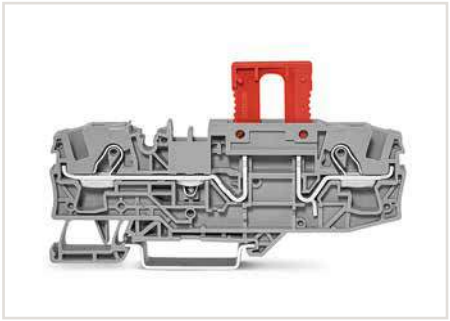

Carrier terminal block with blind plug in disconnect position.

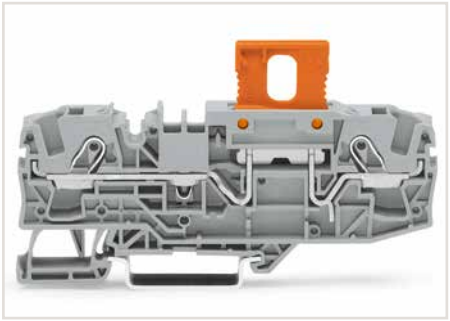

Carrier terminal block (2006-401) with disconnect plug (2006-1661) in operating position

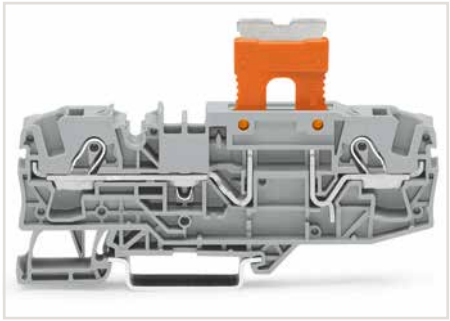

Carrier terminal block (2006-401) with disconnect plug (2002-1661) in parked position

IEC 60204/DIN VDE 0113 "Safety of machinery – Electrical equipment of machines – Part 1: General requirements," Section 9.4.3.1:

Ground faults on control circuits shall not cause unintentional starting, hazardous movements or prevent stopping of the machine.

In order to fulfill this requirement, bonding to the protective bonding circuit shall be provided in accordance with Section 8.2 and the devices shall be connected as described in Section 9.1.4. Control circuits fed from a transformer and not connected to the protective bonding circuit shall be provided with an insulation monitoring device (e.g., residual current device), which either indicates a ground fault or interrupts the circuit automatically after a ground fault.

In the case of electronic circuits, the connection of one side of the control circuit to the protective bonding circuit in accordance with Section 9.1.4 can prevent unintentional operation. When this does not help, or if due to other reasons that electronic circuits cannot be connected to the protective bonding circuit, other measures shall be taken to achieve the same level of safety.

Multipole control switches that interrupt all live conductors shall be used where the control circuit is directly connected between the phase conductors of the supply or between a phase conductor and a neutral conductor, which is either not grounded or grounded through a high impedance. This is required for starting or stopping those machine functions, which can cause a hazardous situation including: damaging the machine or halting work in progress in the event of unintentional starting or failure to stop.

TOPJOB® S
Fuse Terminal Blocks for Automotive Blade-Style Fuses
6 (10) mm², 2006 Series

1

0.5 … 6 (10) mm² ❶	20 … 8 AWG	
500 V/8 kV/3 ❷	12 V, 15 A	
I_N 25 A (30 A) ❸	12 V, 30 A	
Terminal block width 7.5 mm / 0.295 inch		
13 … 15 mm / 0.51 … 0.59 inch		

0.5 … 6 (10) mm² ❶	20 … 8 AWG	
500 V/8 kV/3 ❷	24 V, 15 A	
I_N 25 A (30 A) ❸	24 V, 30 A	
Terminal block width 7.5 mm / 0.295 inch		
13 … 15 mm / 0.51 … 0.59 inch		

0.5 … 6 (10) mm² ❶	20 … 8 AWG	
500 V/8 kV/3 ❷	48 V, 30 A	
I_N 25 A (30 A) ❸	48 V, 30 A	
Terminal block width 7.5 mm / 0.295 inch		
13 … 15 mm / 0.51 … 0.59 inch		

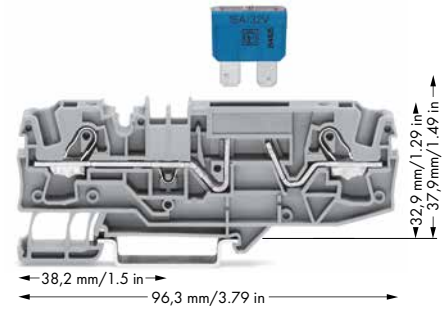

2006-1681/1000-429 2006-1681/1000-449

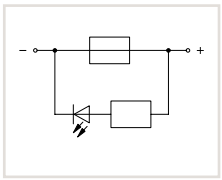

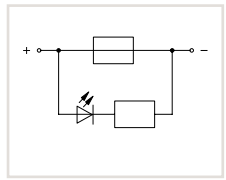

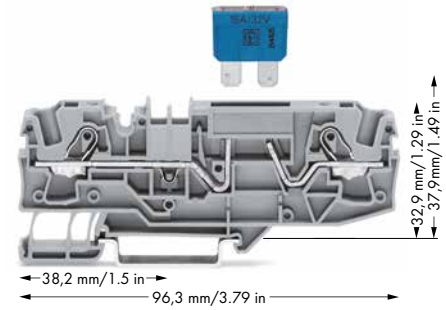

2006-1681/1000-413 2006-1681/1000-434

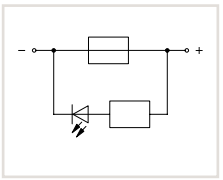

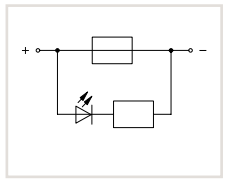

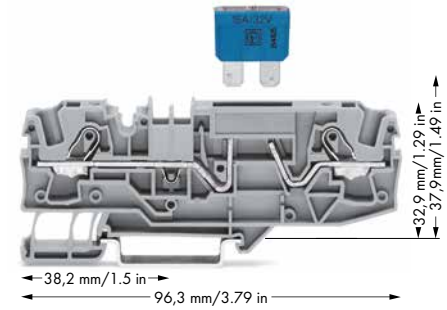

2006-1681/1000-414 2006-1681/1000-435

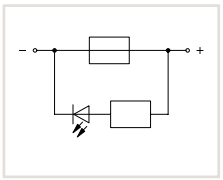

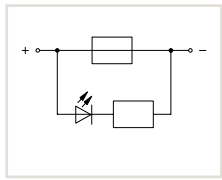

Item No.	Pack. Unit
2-conductor fuse terminal block for automotive blade-style fuses, 12 V, with test point, with blown fuse indication by LED, power consumption LED: 4.8 mA	
Electrical ratings are given by the fuse and blown fuse indication. Blade-style fuses: Observe touch-proof protection for 42 V and higher voltages!	
◯ gray **2006-1681/1000-429**	25
◯ gray **2006-1681/1000-449**	25
Other terminal blocks with the same profile:	
Through **2006-1601** Page 80	

Item No.	Pack. Unit
2-conductor fuse terminal block for automotive blade-style fuses, 24 V, with test point, with blown fuse indication by LED, power consumption LED: 4.8 mA	
Electrical ratings are given by the fuse and blown fuse indication. Blade-style fuses: Observe touch-proof protection for 42 V and higher voltages!	
◯ gray **2006-1681/1000-413**	25
◯ gray **2006-1681/1000-434**	25

Item No.	Pack. Unit
2-conductor fuse terminal block for automotive blade-style fuses, 48 V, with test point, with blown fuse indication by LED, power consumption LED: 4.8 mA	
Electrical ratings are given by the fuse and blown fuse indication. Blade-style fuses: Observe touch-proof protection for 42 V and higher voltages!	
◯ gray **2006-1681/1000-414**	25
◯ gray **2006-1681/1000-435**	25

2006 Series Accessories

Appropriate marking systems: WMB/Marking strips (see Section 13)

End and intermediate plate, 1 mm thick



orange	**2006-1692**	100 (4x25)
gray	**2006-1691**	100 (4x25)

Push-in type jumper bar, insulated, I_N 41 A, light gray



2-way	**2006-402**	50 (2x25)
3-way	**2006-403**	50 (2x25)
4-way	**2006-404**	50 (2x25)
5-way	**2006-405**	50 (2x25)

Push-in type jumper bar, insulated, I_N 41 A, light gray



from 1 to 3	**2006-433**	50 (2x25)
from 1 to 4	**2006-434**	50 (2x25)
from 1 to 5	**2006-435**	50 (2x25)

Protective warning marker, with black high-voltage symbol, for 5 terminal blocks



yellow	**2006-115**	100 (4x25)

WMB Multi marking system, white, 10 strips with 10 markers per card, 5 … 5.2 mm stretchable

plain	**793-5501**	5

Marking strip, plain, 11 mm wide, 50 m reel



white	**2009-110**	1

Double-deck marker carrier, pivoting



gray	**2002-121**	50 (2x25)

0.5 … 6 (10) mm² ❶	20 … 8 AWG
500 V/8 kV/3 ❷	600 V, 15 A
I_N 25 A (30 A) ❸	600 V, 30 A

Terminal block width 7.5 mm / 0.295 inch
13 … 15 mm / 0.51 … 0.59 inch

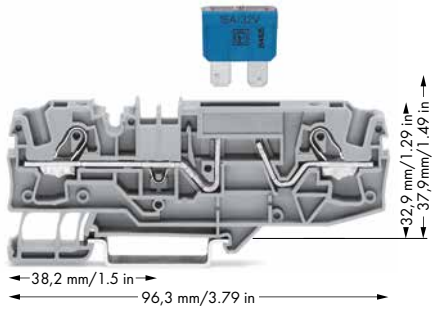

❶ Conductor range: 0.5 … 10 mm² "s + f-st";
Push-in termination: 1 … 10 mm² "s"
and 1.5 … 6 mm²
"insulated ferrule, 12 mm"

❷ 500 V = rated voltage
8 kV = rated surge voltage
3 = pollution degree
(see Section 14)

❸ Power consumption LED: 4.8 mA

	Item No.	Pack. Unit
2-conductor fuse terminal block for automotive blade-style fuses, with test point, without blown fuse indication Electrical ratings are given by the fuse. Blade-style fuses: Observe touch-proof protection for 42 V and higher voltages!		
gray	**2006-1681**	25
Blade-style fuses (not offered by WAGO)		
Excess-current circuit-breaker, thermal (not offered by WAGO) **Recommended excess-current circuit-breakers from ETA**		

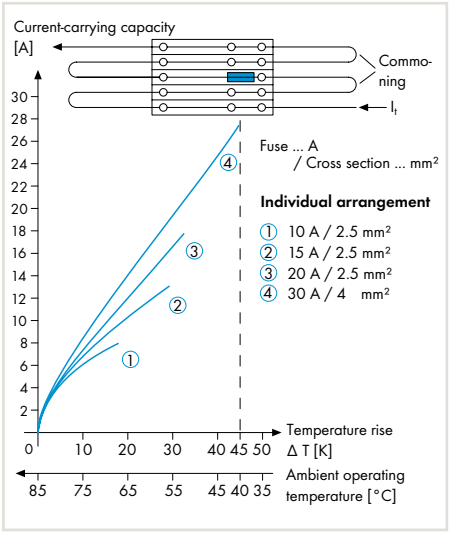

Application Notes on Terminal Blocks for Miniature Metric Fuses
Diagram: Individual arrangement

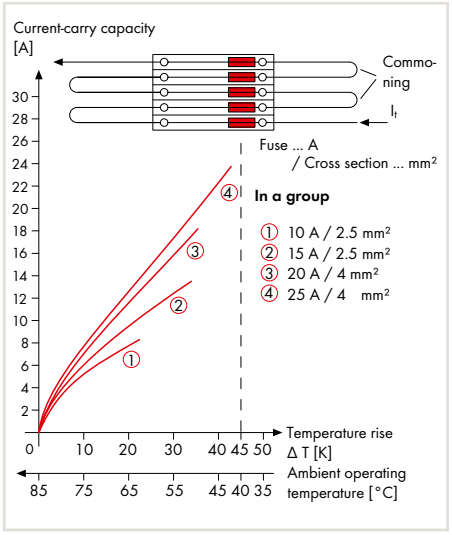

Application Notes on Terminal Blocks for Miniature Metric Fuses
Diagram: Block arrangement

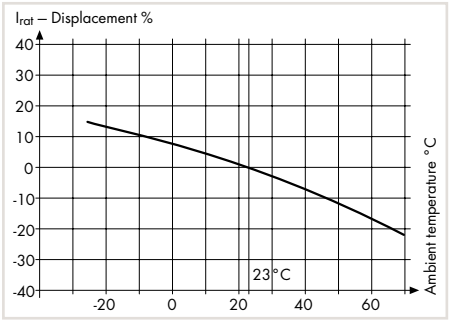

Application Notes on Terminal Blocks for Miniature Metric Fuses
Nominal current ratings for fuse cartridges are defined differently in international standards.
This is why the recommended continuous current-carrying capacity of the fuses is max. 80 % of their nominal current according to DIN 72581/Part 3 (for an ambient operating temperature of 23 °C).
Selecting the correct fuse cartridge is important for product safety within applications, as well as for fuse cartridge service life and reliability. Fuse cartridges will only operate perfectly as protection components (break-off point) if they are properly selected and used as intended (i.e., according to the state of the technology and valid specifications, as well as data sheet characteristics), according to basic safety requirements (i.e., persons, animals and property must be protected against hazards).

Information from the mini-automotive, blade-type fuse manufacturers

Derating T_{amb} /°C	%	F_T
- 25	14	0.877
- 20	13	0.885
- 15	12	0.893
- 10	11	0.901
- 5	10	0.909
0	9	0.917
5	8	0.926
10	6	0.943
15	4	0.962
20	2	0.980
23	0	1.000
30	- 2	1.020
35	- 4	1.042
40	- 6	1.064
45	- 8	1.087
50	- 10	1.111
55	- 13	1.149
60	- 16	1.190
65	- 19	1.235
70	- 22	1.282

For product safety, fuse cartridges must generally be tested both under normal and faulty operating conditions within your application.

PUSH-IN CAGE CLAMP®

TOPJOB® S – Fused Disconnect Terminal Blocks with a Pivoting Fuse Holder for 5 x 20 mm, 5 x 30 mm and ¼" x 1¼" Miniature Metric Fuses

6 (10) mm², 2006 Series

1

0.5 … 6 (10) mm² ❶	**20 … 8 AWG**
800 V/8 kV/3 ❷	**600 V, 15 A**
I_N 10 A	**600 V, 15 A**
Terminal block width 7.5 mm / 0.295 inch	
13 … 15 mm / 0.51 … 0.59 inch	

0.5 … 6 (10) mm² ❶	**20 … 8 AWG**
800 V/8 kV/3 ❷	**30 V, 15 A**
I_N 10 A	**30 V, 15 A**
Terminal block width 7.5 mm / 0.295 inch	
13 … 15 mm / 0.51 … 0.59 inch	

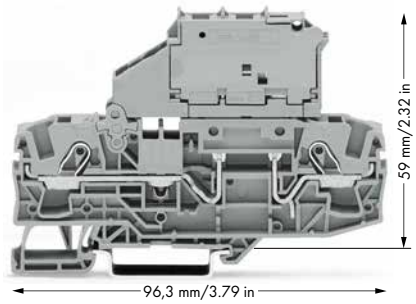

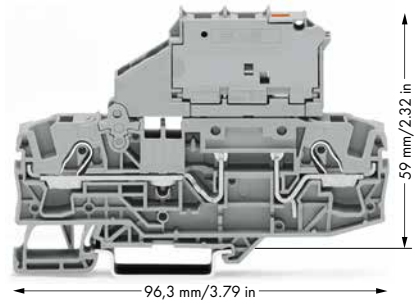

❶ Conductor range: 0.5 … 10 mm² "s + f-st"; Push-in termination: 1 … 10 mm² "s" and 1.5 … 6 mm² "insulated ferrule, 12 mm"

❷ 800 V = rated voltage
8 kV = rated surge voltage
3 = pollution degree
(see Section 14)

❸ See application notes for: Star point jumper, page 135

	Item No.	Pack. Unit
2-conductor fused disconnect terminal block with a pivoting fuse holder, without blown fuse indication Electrical ratings are given by the fuse.		
for (5 x 20) mm miniature metric fuse		
gray	**2006-1611**	25
for (5 x 30) mm miniature metric fuse		
gray	**2006-1621**	25
for ¼" x 1¼" miniature metric fuse		
gray	**2006-1631**	25

	Item No.	Pack. Unit
2-conductor fused disconnect terminal block with a pivoting fuse holder, with blown fuse indication by LED, gray Electrical ratings are given by the fuse and blown fuse indication. Leakage current in case of a blown fuse: LED 2 mA		
for (5 x 20) mm miniature metric fuse		
12 … 30 V	**2006-1611/1000-541**	25
30 … 65 V	**2006-1611/1000-542**	25
120 V	**2006-1611/1000-867**	25
230 V	**2006-1611/1000-836**	25
for (5 x 30) mm miniature metric fuse		
12 … 30 V	**2006-1621/1000-541**	25
30 … 65 V	**2006-1621/1000-542**	25
120 V	**2006-1621/1000-867**	25
230 V	**2006-1621/1000-836**	25
380 … 500 V	**2006-1621/1000-859**	25
for ¼" x 1¼" miniature metric fuse		
12 … 30 V	**2006-1631/1000-541**	25
30 … 65 V	**2006-1631/1000-542**	25
120 V	**2006-1631/1000-867**	25
230 V	**2006-1631/1000-836**	25
380 … 500 V	**2006-1631/1000-859**	25

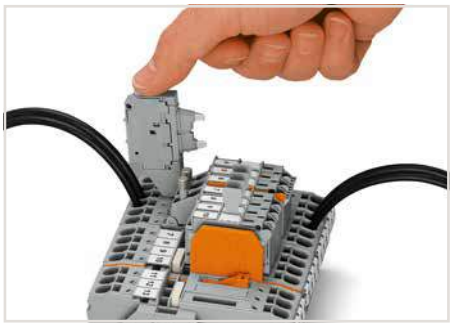

Fused disconnect terminal block with a pivoting fuse holder
Pivot the fuse holder into the locked open position.

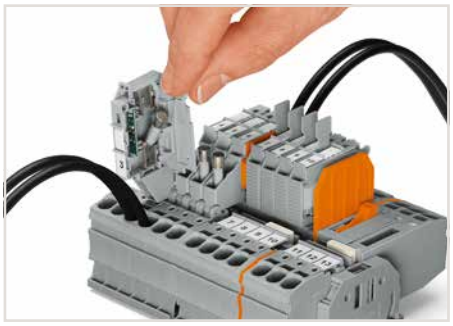

Fused disconnect terminal block with a pivoting fuse holder
Fuse replacement:
Opening the cover to replace the fuse

2006 Series Accessories

Appropriate marking systems: WMB/Marking strips (see Section 13)

End and intermediate plate, 1 mm thick



orange	**2006-1692**	100 (4x25)
gray	**2006-1691**	100 (4x25)

End plate for fuse terminal blocks, 2 mm thick



orange	**2006-992**	100 (4x25)
gray	**2006-991**	100 (4x25)

Push-in type jumper bar, insulated, I_N 41 A, light gray



2-way	**2006-402**	50 (2x25)
3-way	**2006-403**	50 (2x25)
4-way	**2006-404**	50 (2x25)
5-way	**2006-405**	50 (2x25)

Star point jumper, insulated, I_N = I_N terminal block, light gray ❸



1-3-5	**2006-405/011-000**	50 (2x25)

Push-in type jumper bar, insulated, I_N 41 A, light gray



from 1 to 3	**2006-433**	50 (2x25)
from 1 to 4	**2006-434**	50 (2x25)
from 1 to 5	**2006-435**	50 (2x25)

Protective warning marker, with black high-voltage symbol, for 5 terminal blocks



yellow	**2006-115**	100 (4x25)

Test plug, with 500 mm cable, 2 mm Ø, max. 42 V



red	**210-136**	50

WMB Multi marking system, white, 10 strips with 10 markers per card, 5 … 5.2 mm stretchable

plain	**793-5501**	5

PUSH-IN CAGE CLAMP®

TOPJOB® S – Fused Disconnect Terminal Blocks with a Pivoting Fuse Holder for ¼" x 1¼" Miniature Metric Fuses

6 (10) mm², 2006 Series

0.5 … 6 (10) mm² ❶ **800 V/8 kV/3 ❷** **I_N 10 A**	**20 … 8 AWG** **600 V, 15 A** **600 V, 15 A**
Terminal block width 10.4 mm / 0.409 inch **13 … 15 mm / 0.51 … 0.59 inch**	

0.5 … 6 (10) mm² ❶ **800 V/8 kV/3 ❷** **I_N 10 A**	**20 … 8 AWG** **30 V, 15 A** **30 V, 15 A**
Terminal block width 10.4 mm / 0.409 inch **13 … 15 mm / 0.51 … 0.59 inch**	

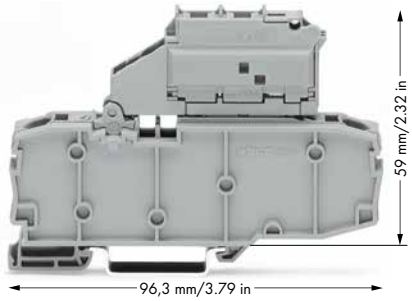

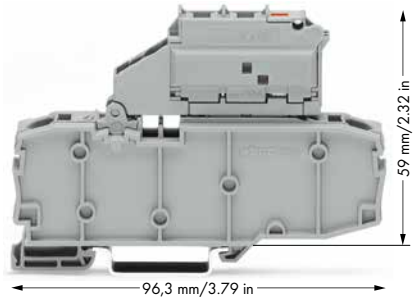

❶ Conductor range: 0.5 … 10 mm² "s + f-st"; Push-in termination: 1 … 10 mm² "s" and 1.5 … 6 mm² "insulated ferrule, 12 mm"

❷ 800 V = rated voltage
8 kV = rated surge voltage
3 = pollution degree
(see Section 14)

❸ See application notes for: Star point jumper, page 135

	Item No.	Pack. Unit
Fused disconnect terminal block with a pivoting fuse holder and end plate, without blown fuse indication Electrical ratings are given by the fuse.		
for ¼" x 1¼" miniature metric fuse		
gray	**2006-1631/099-000**	25

	Item No.	Pack. Unit
Fused disconnect terminal block with a pivoting fuse holder and end plate, for ¼" x 1¼" miniature metric fuse, with blown fuse indication by LED, gray Electrical ratings are given by the fuse and blown fuse indication. Leakage current in case of a blown fuse: LED 2 mA		
for ¼" x 1¼" miniature metric fuse		
12 … 30 V	**2006-1631/1099-541**	25
30 … 65 V	**2006-1631/1099-542**	25
120 V	**2006-1631/1099-867**	25
230 V	**2006-1631/1099-836**	25
380 … 500 V	**2006-1631/1099-859**	25

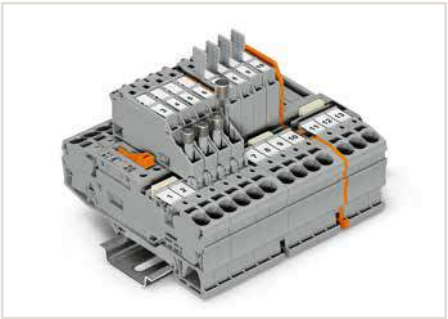

Pivoting fuse holder with spare fuse holder

2006 Series Accessories

Appropriate marking systems: WMB/Marking strips (see Section 13)

End plate for fuse terminal blocks, 2 mm thick			
orange	**2006-992**	100 (4x25)	
gray	**2006-991**	100 (4x25)	
Push-in type jumper bar, insulated, I_N 25 A, light gray			
from 1 to 3	**2002-433**	200 (8x25)	
from 1 to 5	**2002-435**	100 (4x25)	
from 1 to 7	**2002-437**	100 (4x25)	
from 1 to 9	**2002-439**	100 (4x25)	
Star point jumper, insulated, I_N = I_N terminal block, light gray ❸			
1-3-5	**2002-405/011-000**	100 (4x25)	
Protective warning marker, with black high-voltage symbol, for 5 terminal blocks			
yellow	**2006-115**	100 (4x25)	
WMB Multi marking system, white, 10 strips with 10 markers per card, 5 … 5.2 mm stretchable			
plain	**793-5501**	5	
Test plug, with 500 mm cable, 2 mm Ø, max. 42 V			
red	**210-136**	50	

Screwless end stop, for DIN-35 rail, 6 mm wide			
gray	**249-116**	100 (4x25)	
Screwless end stop, for DIN-35 rail, 10 mm wide			
gray	**249-117**	50 (2x25)	

Miniature fuses

Series Item No.		Overload and short circuit protection		Short circuit protection only	
		Individual argmt.	Group argmt.	Individual argmt.	Group argmt.
		Fused disconnect terminal blocks			
2006-1611	7.5	1.6 W	1.6 W	2.5 W	2.5 W
2006-1621	7.5	1.6 W	1.6 W	2.5 W	2.5 W
2006-1631	7.5	1.6 W	1.6 W	2.5 W	2.5 W
2006-1631 /099-...	10.4	2.5 W	2.5 W	2.5 W	2.5 W
2006-1631 /1099-...	10.4	2.5 W	2.5 W	2.5 W	2.5 W

When selecting miniature metric fuses, make sure that the maximum power loss listed above is not exceeded. The power loss is determined according to IEC or EN 60947-7-3/VDE 0611-6 at 23 °C. The temperature rise of the terminal blocks must be checked according to their application and mounting. Higher ambient temperatures place additional strain on fuse cartridges. Therefore, in such applications, the rated current must be reduced if necessary. More details are available from the fuse manufacturers.

TOPJOB® S – Disconnect/Test Terminal Blocks (30 A) and Through/Carrier Terminal Blocks of Same Profile

6 (10) mm², 2006 Series

1

0.5 … 6 (10) mm² ❶ | 20 … 8 AWG AC/DC 1000 V/ DC 1500 V/12 kV/3 ❷ I_N 30 A 600 V, 30 A, 1000 V, 30 A Terminal block width 15 mm / 0.591 inch 13 … 15 mm / 0.51 … 0.59 inch	0.5 … 6 (10) mm² ❶ | 20 … 8 AWG AC/DC 1000 V/ DC 1500 V/12 kV/3 ❷ I_N 30 A 600 V, 30 A, 1000 V, 30 A Terminal block width 15 mm / 0.591 inch 13 … 15 mm / 0.51 … 0.59 inch	0.5 … 6 (10) mm² ❶ | 20 … 8 AWG AC/DC 1000 V/ DC 1500 V/12 kV/3 ❷ I_N 30 A 600 V, 30 A, 1000 V, 30 A Terminal block width 15 mm / 0.591 inch 13 … 15 mm / 0.51 … 0.59 inch

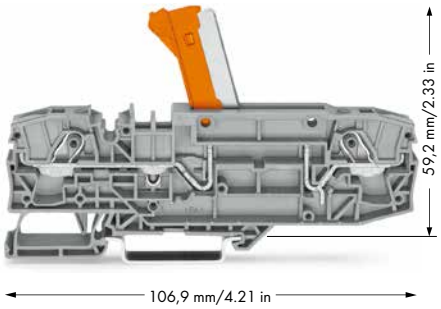

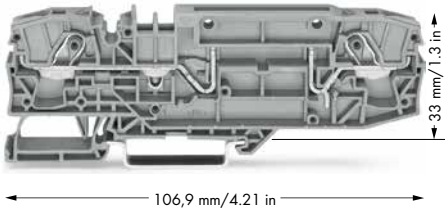

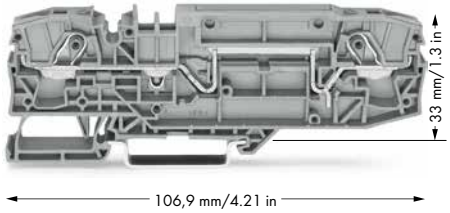

	Item No.	Pack. Unit
2-conductor disconnect/test terminal block, with test point, orange disconnect link		
gray	**2006-8671**	12
blue	**2006-8674**	12

	Item No.	Pack. Unit
2-conductor carrier terminal block, with test point		
gray	**2006-8661**	12
blue	**2006-8664**	12

	Item No.	Pack. Unit
2-conductor through terminal block, with test point, same profile as 2-conductor disconnect terminal block		
gray	**2006-8601**	12
blue	**2006-8604**	12

Item-Specific Accessories

Disconnect plug for carrier terminal blocks, suited when using a carrier terminal block as disconnect terminal block



orange **2006-8401** 48 (4x12)

2006 Series Accessories

Appropriate marking systems: WMB/Marking strips (see Section 13)

End and intermediate plate, 1 mm thick



orange **2006-8692** 48 (4x12)
gray **2006-8691** 48 (4x12)

Protective warning marker, with black high-voltage symbol, ❸ for 5 terminal blocks



yellow **2006-115** 100 (4x25)

Push-in type jumper bar, insulated, I_N 41 A, light gray



from 1 to 3 **2006-433** 50 (2x25)
from 1 to 5 **2006-435** 50 (2x25)

Lockout cap, for conductor entry and operating slot



gray **2006-191** 25

WMB Multi marking system, white, 10 strips with 10 markers per card, for terminal widths 5 … 17.5 mm

plain **793-501** 5

WMB Multi marking system, plain, 10 strips with 10 markers per card, for terminal widths 5 … 17.5 mm



yellow	**793-501/000-002**
red	**793-501/000-005**
blue	**793-501/000-006**
gray	**793-501/000-007**
orange	**793-501/000-012**
light green	**793-501/000-017**
green	**793-501/000-023**
violet	**793-501/000-024**

5

Marking strip, plain, 11 mm wide, 50 m reel



white **2009-110** 1

WMB Inline, plain, 1,500 WMB markers (5 mm) per reel, 5 … 5.2 mm stretchable



white **2009-115** 1

Overview of certification organizations, see page 654

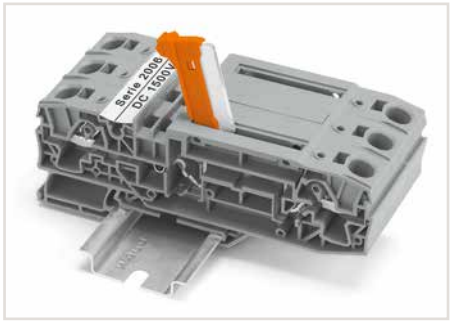

Disconnect/test terminal block with knife disconnect (2006-8671) in disconnect position

Both 2006-8671 and 2006-8661 TOPJOB® S disconnect terminal blocks have been specially designed for use in photovoltaic and wind power systems, where voltages exceeding 1,000 V (IEC) and 600 V (UL) are required (e.g., generator junction boxes).

- Ideal for high voltages in renewable energy applications
- **Disconnect terminal blocks with two alternative disconnect options:**
  with orange knife disconnect (2006-8671)
  with orange disconnect plug (2006-8661)
- This 2006 Series terminal blocks are approved for 30 A/1,500 VDC (IEC) or 1,000 VDC (UL)
- With a terminal block width of 15 mm, the maximum cross-section for solid and fine-stranded conductors is 10 mm² (8 AWG) and 6 mm² (10 AWG) for ferruled conductors.
- Equipped with test slots
- Compatible with through terminal blocks of the same profile and all other TOPJOB® S terminal blocks

❶ Conductor range: 0.5 ... 10 mm² "s + f-st"; Push-in termination: 1 ... 10 mm² "s" and 1.5 ... 6 mm² "insulated ferrule, 12 mm"

❷ AC/DC 1000 V = rated voltage
DC 1500 V
12 kV = rated surge voltage
3 = pollution degree
(see Section 14)

❹ Protective warning marker must be applied individually.

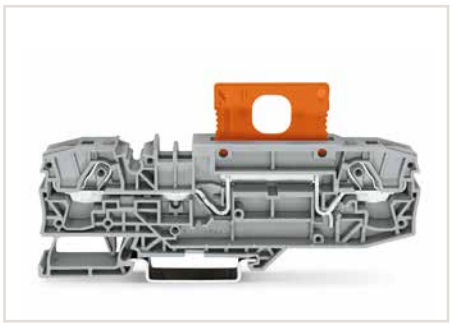

Carrier terminal block with disconnect plug (2006-8401) in operating position

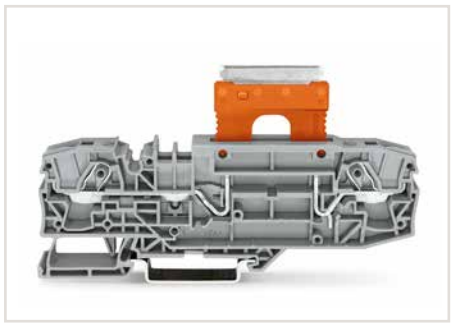

Carrier terminal block with disconnect plug (2006-8401) in parked position

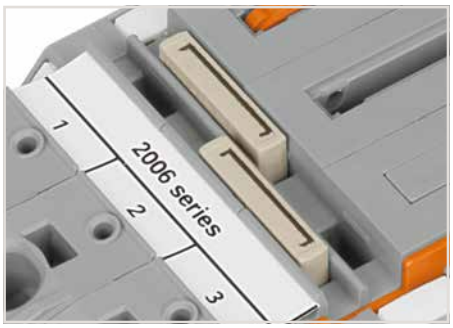

Commoning a 15 mm-wide terminal block via push-in type jumper bars: 1 to 3 (2006-433) and 1 to 5 (2006-435).

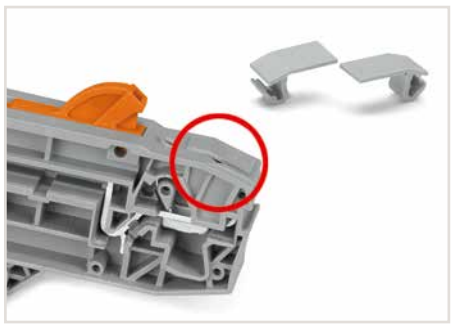

Lockout cap (2006-191) seals unused conductor entry.

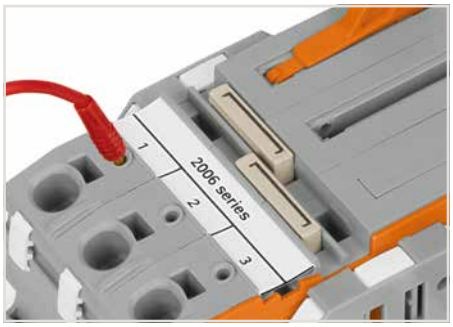

Test slots on both terminal block sides allow for direct measurement.

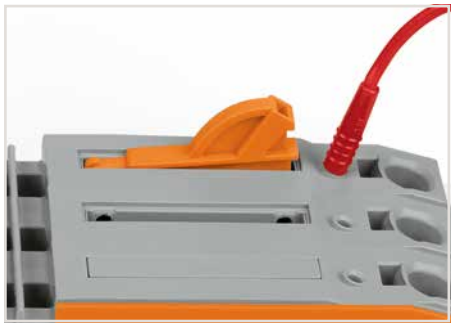

Test slots on both terminal block sides allow for direct measurement.

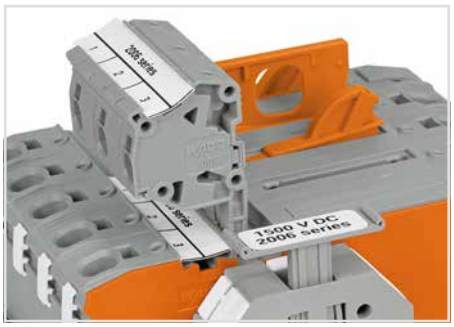

Alternatively, measurement can also be performed using TOPJOB® S Connectors (2006-511) from terminal block 1 to 2. Spacer modules (2006-549) must be used to compensate for the 15 mm terminal block width.

TOPJOB® S
Current Transformer Terminal Blocks, 2007-8821 (Orange Disconnect Link)

1

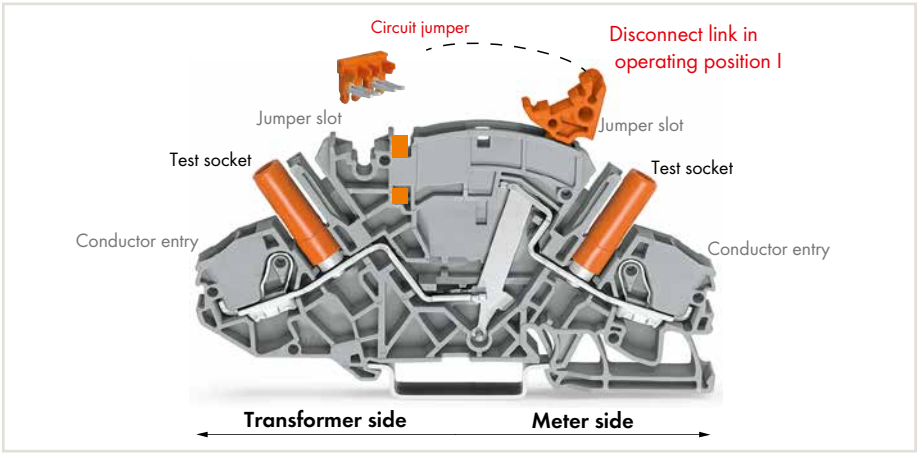

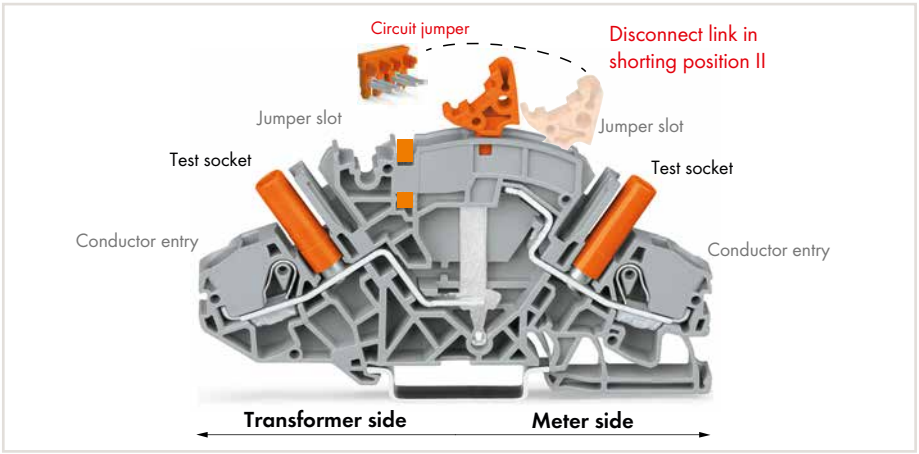

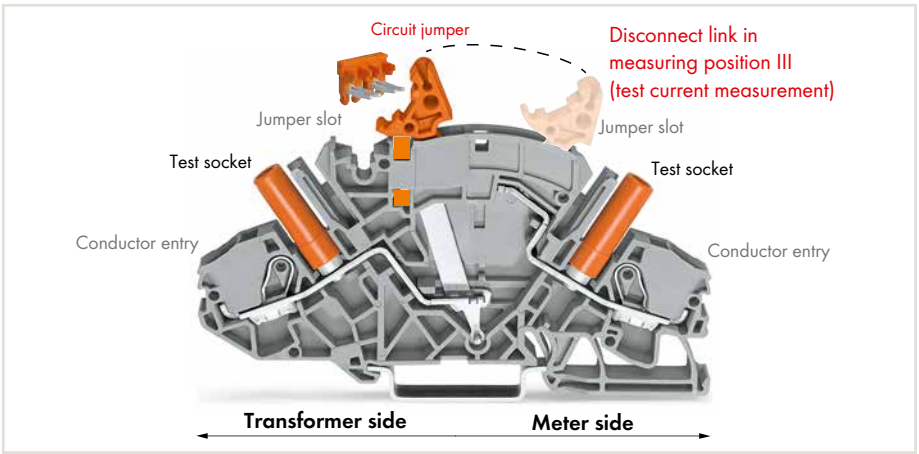

WAGO's TOPJOB® S Current Transformer (Disconnect/Test) Terminal Block (2007-8821) is designed for current transformer circuits.

First, the current transformer is shorted via disconnect link and circuit jumper (insert jumper, move disconnect link from operating position I to shorting position II, activate shorting path). Connecting a measurement device via test socket on the meter side can only be performed once circuit disconnection is complete (disconnect link in measuring position III).

- Features top-of-unit circuit jumper slot for shorting path activation.
- Disconnect link provides intuitive and easy operation, as well as exact switching status indication.
- Combines high functionality with compact design (99.6 mm long and 8 mm wide).
- All 2007 Series terminal blocks are rated at 30 A/500 V (IEC) and 300 V (UL).
- With a terminal block width of 8 mm, the maximum cross-section for solid and fine-stranded conductors is 10 mm² (8 AWG) and 6 mm² (10 AWG) for ferruled conductors.
- Touch-proof test sockets for 4 mm Ø test plugs on transformer and meter side.
- Compatible with through and ground conductor terminal blocks having the same profile.



Preparing shorting path for the current transformer circuits.



Insert insulated, touch-proof circuit jumpers into jumper slot.



Using locking covers or profiles for adjacent terminal blocks allows disconnect links to be operated simultaneously.

TOPJOB® S
Implementing a Current and Voltage Transformer Circuit



Disconnect link in operating position I
Terminal blocks required:
2 x disconnect/test terminal block (2007-8821)
1 x circuit jumper, orange (2007-8442)
Locking covers or interlocking links (option)

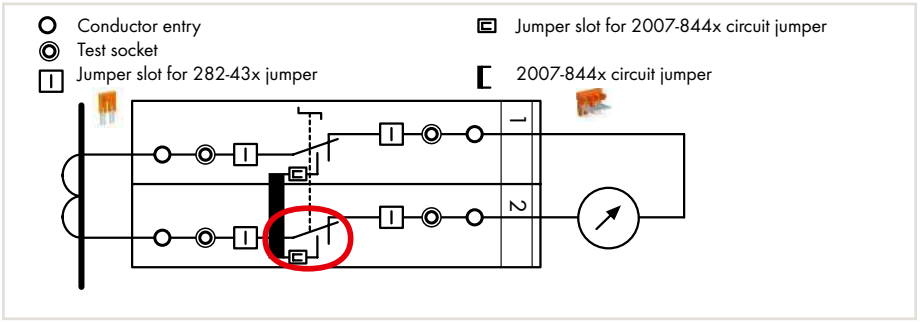

In the operating position, the measurement device is connected to the transformer, the circuit jumper is inserted and the disconnect link is in position I.



Disconnect link in shorting position II

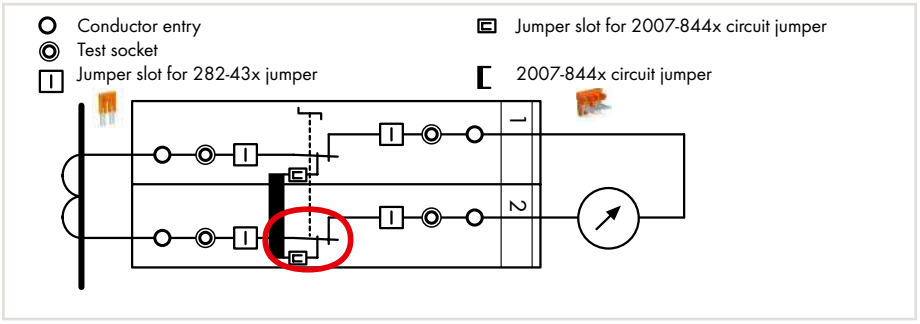

The transformer is not disconnected from the measuring device yet, the shorting path is activated by moving the disconnect link into shorting position II and the transformer is safely shorted.



Test current measurement: Disconnect link in measuring position III

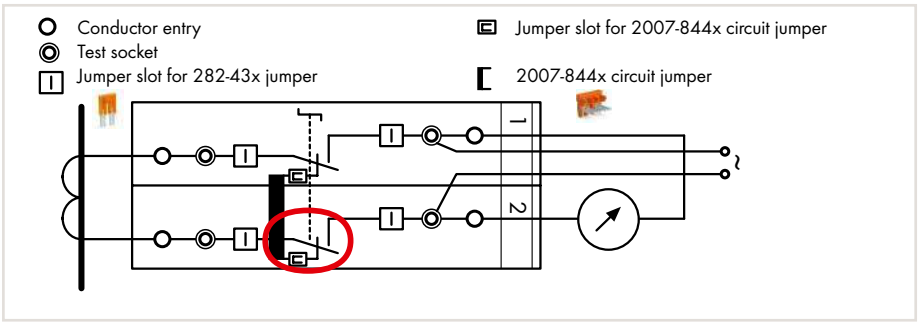

The measuring device is electrically disconnected from the transformer. If required, an external voltage can be applied to the measuring device via the test socket.



Measurement testing (using both test sockets)
Terminal block 1: Disconnect link in operating position I
Terminal block 2: Disconnect link in measuring position III

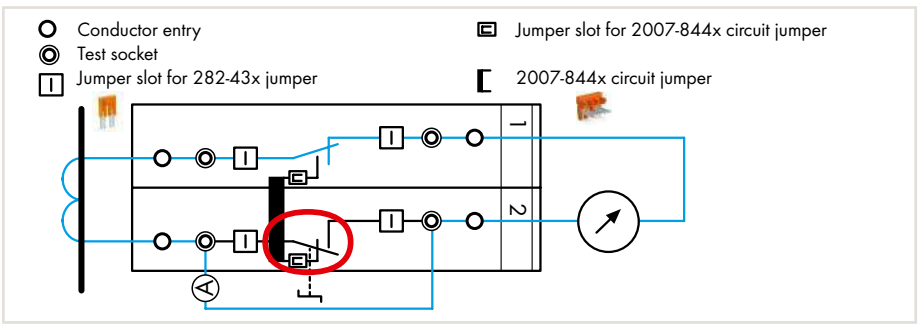

Measurement testing: First insert the reference current meter (A) into the test socket, then move the disconnect link into measurement position III (test current measurement).

Examples for Current Transformer Circuits



Measuring set for a three-phase current transformer
Terminal blocks required:
6 x disconnect/test terminal block (2007-8821)
3 x circuit jumper, orange (2007-8442)
In addition: interlocking links, locking covers, lock-outs

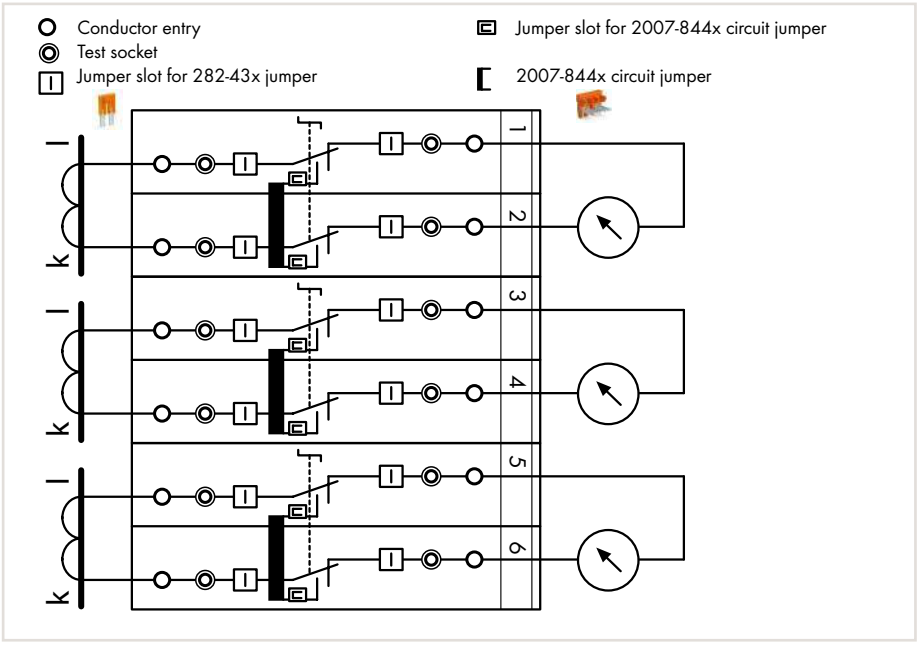

Pairs of disconnect links are interconnected via locking cover or interlocking link. Measurement testing is performed after the interlocking is released.



Measuring set for a three-phase current transformer with 'Y' point
Terminal blocks required:
6 x disconnect/test terminal block (2007-8821)
1 x circuit jumper, orange (2007-8446)
1 x jumper, orange (282-433)
In addition: interlocking links, locking covers, lock-outs

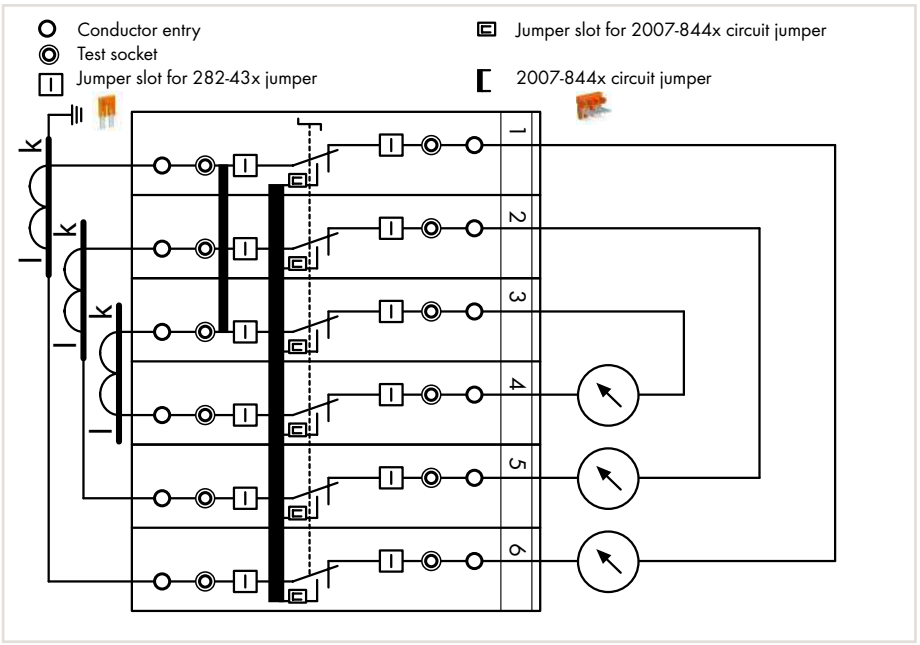

All six disconnect links are interconnected via locking cover or interlocking link.

TOPJOB® S
2007-8811 Voltage Transformer Terminal Blocks (Light Gray Disconnect Link)

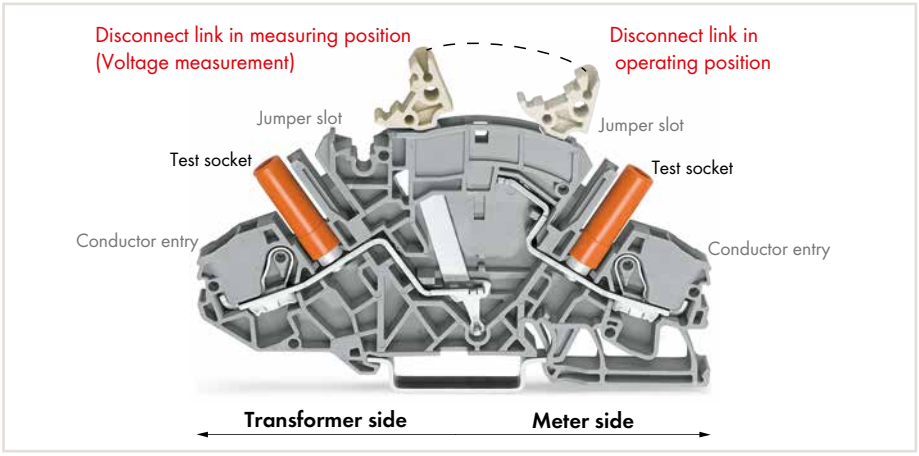

WAGO's TOPJOB® S Voltage Transformer (Disconnect/Test) Terminal Block (2007-8811) is designed for current transformer circuits.

First, disconnect the voltage transformer from the circuit (move disconnect link from operating position to measuring position). Connecting a measurement device via test socket on the meter side can only be performed after disconnection is complete (measuring position).

- For voltage transformer circuits (no circuit jumper slot required as with 2007-8821 Current Transformer Terminal Block)
- Disconnect link provides intuitive and easy operation, as well as exact switching status indication.
- Combines high functionality with compact design (99.6 mm long and 8 mm wide).
- All 2007 Series terminal blocks are rated at 30 A/500 V (IEC) and 300 V (UL).
- With a terminal block width of 8 mm, the maximum cross-section for solid and fine-stranded conductors is 10 mm² (8 AWG) and 6 mm² (10 AWG) for ferruled conductors.
- Touch-proof test sockets for 4 mm Ø test plugs on transformer and meter side.
- Compatible with through and ground conductor terminal blocks of same profile.



Example for voltage transformer testing
Measuring set for single-phase voltage transformer testing
Terminal blocks required:
1 x disconnect/test terminal block (2007-8811)
1 x through terminal block (2007-8801)
1 x end plate, orange (2007-8892)
In addition: locking cover, lock-out

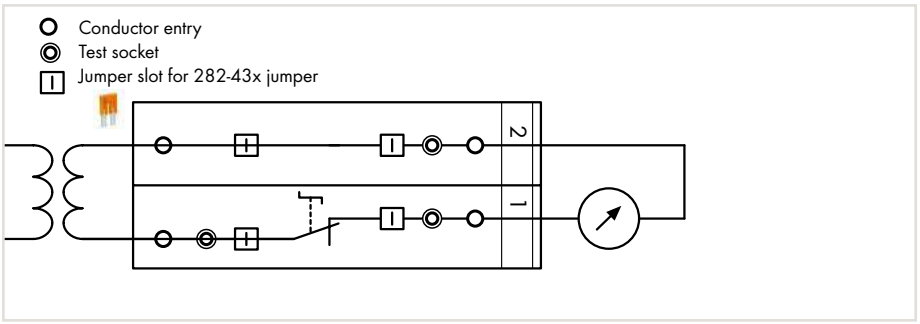

Disconnecting the voltage transformer from the circuit: Move disconnect link from operating position to measuring position.
Voltage measurement: Connecting a measurement device via test socket on the meter side can only be performed after disconnection is complete (measuring position).



Marking via WMB Multi markers or marking strips.



Additional commoning option on the transformer side



Multipole switching via snap-on type, transparent (locking) cover for disconnect links.

TOPJOB® S – Disconnect/Test Terminal Blocks (30 A) and Through/Ground Conductor Terminal Blocks for Current and Voltage Transformer Circuits

6 (10) mm², 2007 Series

1

0.5 … 6 (10) mm² ❶ | 20 … 8 AWG 500 V/6 kV/3 ❷ | 300 V, 30 A I_N 30 A Terminal block width 8 mm / 0.315 inch 13 … 15 mm / 0.51 … 0.59 inch	0.5 … 6 (10) mm² ❶ | 20 … 8 AWG 500 V/6 kV/3 ❷ | 300 V, 10 A I_N 30 A Terminal block width 8 mm / 0.315 inch 13 … 15 mm / 0.51 … 0.59 inch	0.5 … 6 (10) mm² ❶ | 20 … 8 AWG 500 V/6 kV/3 ❷ | 300 V, 30 A I_N 30 A Terminal block width 8 mm / 0.315 inch 13 … 15 mm / 0.51 … 0.59 inch

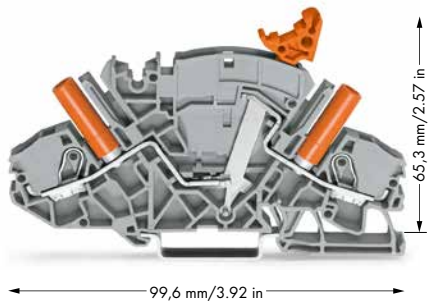

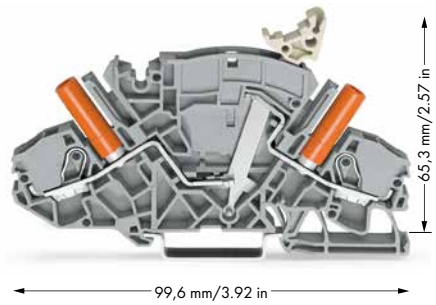

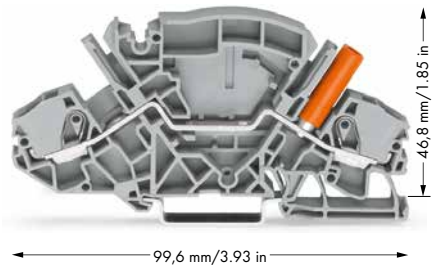

	Item No.	Pack. Unit
2-conductor disconnect/test terminal block, e.g., current transformer circuits, with circuit jumper slot, with touch-proof test sockets, for 4 mm Ø test plugs		
gray	**2007-8821**	20

	Item No.	Pack. Unit
2-conductor disconnect/test terminal block, e.g., voltage transformer circuits, with touch-proof test sockets, for 4 mm Ø test plugs		
gray	**2007-8811**	20

	Item No.	Pack. Unit
2-conductor through terminal block, with touch-proof test socket, for 4 mm Ø test plugs		
gray	**2007-8801**	20
blue	**2007-8804**	20

Item-Specific Accessories

Adjacent jumper for switch lever, insulated, orange, I_N 30 A



	Item No.	Pack. Unit
2-way	**2007-8442**	50 (5x10)
3-way	**2007-8443**	50 (5x10)
4-way	**2007-8444**	50 (5x10)
5-way	**2007-8445**	50 (5x10)
6-way	**2007-8446**	50 (5x10)
7-way	**2007-8447**	50 (5x10)
8-way	**2007-8448**	50 (5x10)

2006 Series Accessories

Appropriate marking systems: WMB/Marking strips (see Section 13)

End and separator plate, 1.5 mm thick, without use of lock-out seal



	Item No.	Pack. Unit
orange	**2007-8892**	50 (5x10)
gray	**2007-8891**	50 (5x10)

End and separator plate, 1.5 mm thick, for use of lock-out seal



	Item No.	Pack. Unit
orange	**2007-8894**	50 (5x10)
gray	**2007-8893**	50 (5x10)

Lock-out, for disconnect link



	Item No.	Pack. Unit
yellow	**2007-8899**	100 (5x20)

Locking cover, mechanically locks multiple links, transparent



	Item No.	Pack. Unit
1-pole	**282-881**	50 (5x10)
2-pole	**282-882**	50 (5x10)
3-pole	**282-883**	50 (5x10)
4-pole	**282-884**	50 (5x10)
5-pole	**282-885**	50 (5x10)
6-pole	**282-886**	50 (5x10)
7-pole	**282-887**	50 (5x10)
8-pole	**282-888**	50 (5x10)

Jumper, insulated, I_N 30 A, orange



	Item No.	Pack. Unit
2-way	**282-432**	50 (5x10)
3-way	**282-433**	50 (5x10)
4-way	**282-434**	50 (5x10)
5-way	**282-435**	50 (5x10)
6-way	**282-436**	50 (5x10)
7-way	**282-437**	50 (5x10)
8-way	**282-438**	50 (5x10)
9-way	**282-439**	50 (5x10)
10-way	**282-440**	50 (5x10)

Jumper with safety lid, insulated, I_N 30 A, orange



	Item No.	Pack. Unit
2-way	**282-432/100-000**	
3-way	**282-433/100-000**	
4-way	**282-434/100-000**	
		50 (5x10)

Interlocking link, mechanically locks multiple links, 1 m/3'3" long



	Item No.	Pack. Unit
transparent	**210-254**	1

Jumper, special design, I_N 30 A, orange



	Item No.	Pack. Unit
1-3-5	**282-435/011-000**	
1-4-5	**282-435/301-000**	
1-2-4-6	**282-436/301-000**	
1-4-6	**282-436/304-000**	
1-3-5-7	**282-437/011-000**	
1-4-7	**282-437/012-000**	
1-2-5-8	**282-438/300-000**	
1-4-7-8	**282-438/301-000**	
1-3-5-7-9	**282-439/011-000**	
		50 (5x10)

Protective warning marker, with black high-voltage symbol, for 5 terminal blocks



	Item No.	Pack. Unit
yellow	**2006-115**	100 (4x25)

WMB Multi marking system, white, 10 strips with 10 markers per card, for terminal widths 5 … 17.5 mm

	Item No.	Pack. Unit
plain	**793-501**	5

Marking strip, plain, 11 mm wide, 50 m reel



	Item No.	Pack. Unit
white	**2009-110**	1

Overview of certification organizations, see page 654

0.5 … 6 (10) mm² ❶ | **20 … 8 AWG**

Terminal block width 8 mm / 0.315 inch
13 … 15 mm / 0.51 … 0.59 inch





Marking via WMB Multi markers or marking strips.

❶ Conductor range: 0.5 … 10 mm² "s + f-st"; Push-in termination: 1 … 10 mm² "s" and 1.5 … 6 mm² "insulated ferrule, 12 mm"

❷ 500 V = rated voltage
6 kV = rated surge voltage
3 = pollution degree
(see Section 14)

	Item No.	Pack. Unit
2-conductor ground terminal block, with touch-proof test socket, for 4 mm Ø test plugs		
green-yellow	**2007-8807**	20

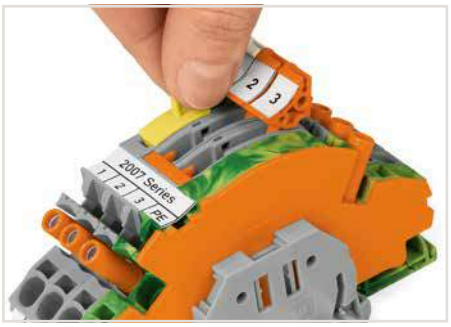

Lock-out prevents accidental operation of disconnect link.

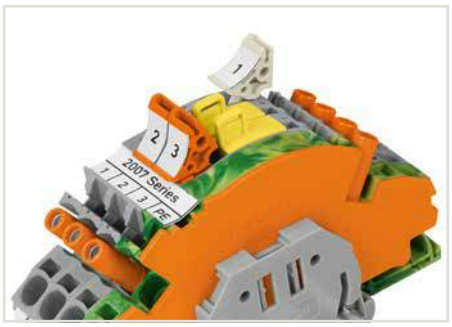

Lock-out snaps into one of two notched positions.

WMB Multi marking system, 10 strips with 10 markers per card, for terminal widths 5 … 17.5 mm, yellow			
	k/l (50x)	**794-5553/000-002**	5
WMB Multi marking system, 10 strips with 10 markers per card, for terminal widths 5 … 17.5 mm, blue			
	U/V (50x)	**794-5554/000-006**	5



Interlocking link mechanically locks multiple links for multi-pole switching applications.



A lock-out seal can be used on the disconnect link in operating position I in combination with an end and separator plate (2007-8893 or 2007-8894).

TOPJOB® S
Terminal Block Assemblies for Current and Voltage Transformers
6 (10) mm², 2007 Series



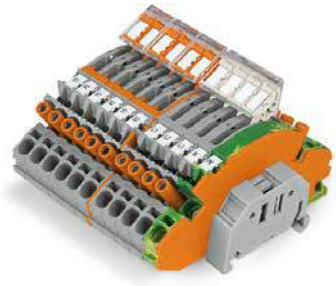

Item No. for 2007-8873 Description	Quantity
249-117 Screwless end stop, 10 mm wide	2
282-882 Locking cover, mechanically locks multiple links, 2-pole	3
282-884 Locking cover, mechanically locks multiple links, 4-pole	1
2007-8442 Adjacent jumper for switch lever, insulated, 2-way	3
2007-8807 2-conductor ground terminal block, with touch-proof test socket, for 4 mm Ø test plug	1
2007-8811 2-conductor disconnect terminal block for test and measurement, with touch-proof test sockets, for 4 mm Ø test plug	4
2007-8821 2-conductor disconnect terminal block for test and measurement, with touch-proof test sockets, for 4 mm Ø test plug	6
2007-8892 End and separator plate, 1.5 mm thick, without use of lock-out seal	2
2009-115 WMB Inline, plain, 1,500 WMB markers (5 mm) per reel, 5 ... 5.2 mm stretchable	21 Markers
282-435/011-000 Jumper, insulated, 1-3-5	1
Assembly width incl. end stop 11.2 cm	

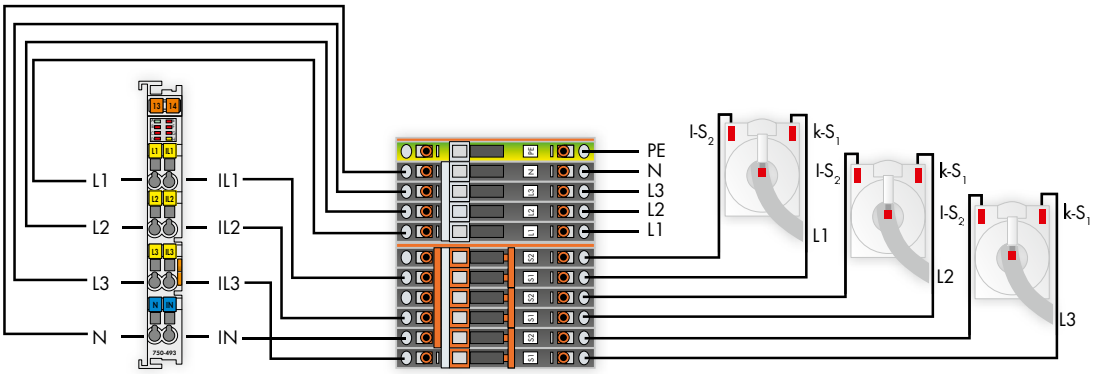

3-Phase Power Measurement Module 750 Series

Terminal Block Assembly for Current and Voltage Transformers 2007 Series

Current Transformers 855 Series

Overview of certification organizations, see page 654





Item No. for 2007-8876 Description	Quantity
249-117 Screwless end stop, 10 mm wide	2
282-369 Collective carrier for jumpers, for DIN-35 rail, for jumpers for transverse switching terminal block (282-811) and longitudinal switching disconnect terminal block (282-821)	1
282-882 Locking cover, mechanically locks multiple links, 2-pole	3
2007-8442 Adjacent jumper for switch lever, insulated, 2-way	3
2007-8821 2-conductor disconnect terminal block for test and measurement, with touch-proof test sockets, for 4 mm Ø test plug	6
2007-8892 End and separator plate, 1.5 mm thick, without use of lock-out seal	1
2009-115 WMB Inline, plain, 1,500 WMB markers (5 mm) per reel, 5 ... 5.2 mm stretchable	12 Markers
282-435/011-000 Jumper, insulated, 1-3-5	1
Assembly width incl. end stop 8.5 cm	

TOPJOB® S
Fuse Plugs on 2.5 (4) mm² Carrier Terminal Blocks

1

Fuse plug with pull-tab
for miniature fuses 5 x 20 mm
250 V / I_N 6.3 A
Plug width 6.1 mm / 0.24 inch

Fuse plug with pull-tab
for miniature fuses 5 x 20 mm
250 V / I_N 6.3 A
Plug width 6.1 mm / 0.24 inch





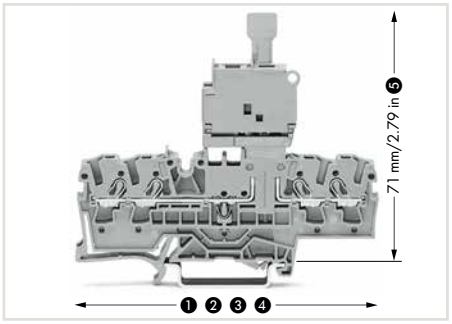

Fuse plug dimensions:
1 66.1 mm / 2.62 inch for 2002-1661
2 76.8 mm / 3.02 inch for 2002-1761
3 87.5 mm / 3.45 inch for 2002-1861
4 72.9 mm / 2.87 inch for 2002-1961
5 with inserted fuse plug

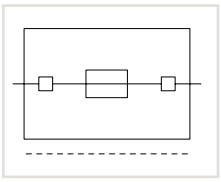

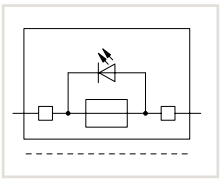

Item No.		Pack. Unit
Fuse plug with pull-tab, for (5 x 20) mm miniature metric fuses		
Electrical ratings are given by the fuse.		
gray	**2004-911**	50

Item No.		Pack. Unit
Fuse plug with pull-tab, for (5 x 20) mm miniature metric fuses, with LED, gray		
Electrical ratings are given by the fuse and blown fuse indication. Leakage current in case of a blown fuse: LED 2 mA		
12 ... 30 V	**2004-911/1000-541**	50
30 ... 65 V	**2004-911/1000-542**	50
120 V	**2004-911/1000-867**	50
230 V	**2004-911/1000-836**	50

Accessories

Appropriate marking systems: WMB/Marking strips (see Section 13)

2-conductor carrier terminal block, 0.25 ... 2.5 (4) mm² / 22 ... 12 AWG, Terminal block width 5.2 mm / 0.205 inch	gray	**2002-1661**	50
End and intermediate plate, 1 mm thick	orange	**2002-1692**	100 (4x25)
	gray	**2002-1691**	100 (4x25)
3-conductor carrier terminal block, 0.25 ... 2.5 (4) mm² / 22 ... 12 AWG, Terminal block width 5.2 mm / 0.205 inch	gray	**2002-1761**	50
End and intermediate plate, 1 mm thick	orange	**2002-1792**	100 (4x25)
	gray	**2002-1791**	100 (4x25)
4-conductor carrier terminal block, 0.25 ... 2.5 (4) mm² / 22 ... 12 AWG, Terminal block width 5.2 mm / 0.205 inch	gray	**2002-1861**	50
End and intermediate plate, 1 mm thick	orange	**2002-1892**	100 (4x25)
	gray	**2002-1891**	100 (4x25)

2-conductor carrier terminal block, 0.25 ... 2.5 (4) mm² / 22 ... 12 AWG, Terminal block width 5.2 mm / 0.205 inch	gray	**2002-1961**	50
End and intermediate plate, 1 mm thick	orange	**2002-1992**	100 (4x25)
	gray	**2002-1991**	100 (4x25)
Double-deck carrier terminal block, 0.25 ... 2.5 (4) mm² / 22 ... 12 AWG, Terminal block width 5.2 mm / 0.205 inch	L/L	**2002-2961**	50
Double-deck carrier terminal block, 0.25 ... 2.5 (4) mm² / 22 ... 12 AWG, Terminal block width 5.2 mm / 0.205 inch	L/N	**2002-2963**	50
End and intermediate plate, 1 mm thick	orange	**2002-2992**	100 (4x25)
	gray	**2002-2991**	100 (4x25)
End plate for fuse terminal blocks, 2 mm thick	orange	**2002-992**	100 (4x25)
	gray	**2002-991**	100 (4x25)
Shorting link, (5 x 20) mm, allows the fuse plug to be used as a disconnect plug	I_N 6.3 A	**281-503**	250 (10x25)

Accessories

WMB Multi marking system, white, 10 strips with 10 markers per card, 5 ... 5.2 mm stretchable	plain	**793-5501**	5
WMB Multi marking system, plain, 10 strips with 10 markers per card, 5 ... 5.2 mm stretchable	yellow	**793-5501/000-002**	
	red	**793-5501/000-005**	
	blue	**793-5501/000-006**	
	gray	**793-5501/000-007**	
	orange	**793-5501/000-012**	
	light green	**793-5501/000-017**	
	green	**793-5501/000-023**	
	violet	**793-5501/000-024**	
			5

Overview of certification organizations, see page 654

PUSH-IN CAGE CLAMP®

TOPJOB® S
Fuse Plugs on 2.5 (4) mm² Carrier Terminal Blocks
Technical Information

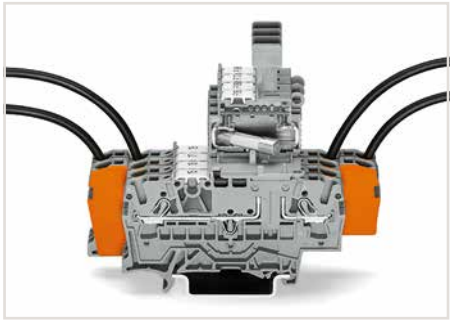

Using fuse plugs with rail-mount terminal blocks for control circuit protection is highly advantageous because the function and wiring levels are separated:
- No additional cost for assembly and wiring
- No risk of accidental contact with live parts when disconnecting the fuse plug
- The fuse plug is completely separated from the carrier terminal block when replacing a fuse – away from current carrying parts
- The fuse plug can be removed by service personnel
- No unintentional reclosing of the circuit by another person
- Quickly exchange a fuse by using a prepared "stand-by plug"

Fuse plug features for quick and safe applications:
- Optional LED indicates blown fuse
- Top-of-unit marking slot provides clear carrier terminal block identification
- Two test slots with touch contacts
- High density with only 5.2 mm width of terminal block and fuse plug width 6.1 mm
- May be used as a disconnect plug in combination with a shorting link

Miniature fuses 5 x 20

Series Item No.	Overload and short circuit protection		Short circuit protection only	
	Individual argmt.	Group argmt.	Individual argmt.	Group argmt.
	Fuse terminal blocks			
2004-911 **2004-911/....-....**	1.6 W	1.6 W	2.5 W	2.5 W

When selecting miniature metric fuses, make sure that the maximum power loss listed above is not exceeded. The power loss is determined according to IEC or EN 60947-7-3/VDE 0611-6 at 23 °C. The temperature rise of the terminal blocks must be checked according to their application and mounting. Higher ambient temperatures place additional strain on fuse cartridges. Therefore, in such applications, the rated current must be reduced if necessary. More details are available from the fuse manufacturers.

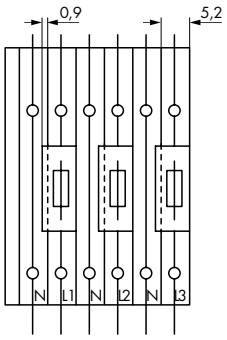

Open side of terminal block left

Please note:
The extra width of the plug (6.1 mm compared to 5.2 mm for carrier terminal blocks) must be compensated for with intermediate plates (1 mm) when building an assembly of carrier terminal blocks equipped with fuse plugs.

TOPJOB® S
Fuse Plugs on 6 (10) mm² Carrier Terminal Blocks

1

Fuse plug with pull-tab 800 V / I_N 10 A Plug width 7.4 mm / 0.291 inch	Fuse plug with pull-tab 800 V / I_N 10 A Plug width 7.4 mm / 0.291 inch	Fuse plug with pull-tab 800 V / I_N 10 A Plug width 10.4 mm / 0.409 inch







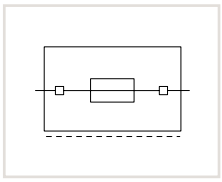

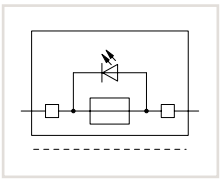

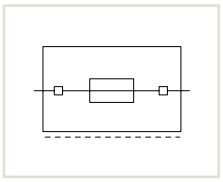

Item No.		Pack. Unit
Fuse plug with pull-tab		
Electrical ratings are given by the fuse.		
for (5 x 20) mm miniature metric fuses		
gray	**2006-911**	25
for (5 x 30) mm miniature metric fuses		
gray	**2006-921**	25
for ¼" x 1¼" miniature metric fuses		
gray	**2006-931**	25

Item No.		Pack. Unit
Fuse plug with pull-tab, with indicator lamp, gray		
Electrical ratings are given by the fuse and blown fuse indication. Leakage current in case of blown fuse: LED 2mA		
for (5 x 20) mm miniature metric fuses		
12 ... 30 V	**2006-911/1000-541**	25
30 ... 65 V	**2006-911/1000-542**	25
120 V	**2006-911/1000-867**	25
230 V	**2006-911/1000-836**	25
for miniature fuses 5 x 30 mm		
12 ... 30 V	**2006-921/1000-541**	25
30 ... 65 V	**2006-921/1000-542**	25
120 V	**2006-921/1000-867**	25
230 V	**2006-921/1000-836**	25
380 ... 500 V	**2006-921/1000-859**	25
for ¼" x 1¼" miniature metric fuses		
12 ... 30 V	**2006-931/1000-541**	25
30 ... 65 V	**2006-931/1000-542**	25
120 V	**2006-931/1000-867**	25
230 V	**2006-931/1000-836**	25
380 ... 500 V	**2006-931/1000-859**	25

Item No.		Pack. Unit
Fuse plug with pull-tab		
Electrical ratings are given by the fuse.		
for ¼" x 1¼" miniature metric fuses		
gray	**2006-931/099-000**	25

Item-Specific Accessories

End and intermediate plate, 1 mm thick			
orange	**2006-1692**	100 (4x25)	
gray	**2006-1691**	100 (4x25)	



Item-Specific Accessories

End and intermediate plate, 1 mm thick			
orange	**2006-1692**	100 (4x25)	
gray	**2006-1691**	100 (4x25)	



Item-Specific Accessories

Intermediate plate, 2.9 mm thick			
orange	**2006-1696**	100 (4x25)	
gray	**2006-1695**	100 (4x25)	



Accessories fuse plugs

Appropriate marking systems: WMB/Marking strips
(see Section 13)

End plate for fuse terminal blocks, 2 mm thick			
orange	**2006-992**	100 (4x25)	
gray	**2006-991**	100 (4x25)	



Shorting link, (5 x 20) mm, allows the fuse plug to be used as a disconnect plug			
I_N 6.3 A	**281-503**	250 (10x25)	



Screwless end stop, for DIN-35 rail, 6 mm wide			
gray	**249-116**	100 (4x25)	



2-conductor carrier terminal block, 0.5 ... 6 (10) mm² / 20 ... 8 AWG Terminal block width 7.5 mm / 0.295 inch			
gray	**2006-1661**	25	



WMB Multi marking system, white, 10 strips with 10 markers per card, 5 ... 5.2 mm stretchable			
plain	**793-5501**	5	

Screwless end stop, for DIN-35 rail, 10 mm wide			
gray	**249-117**	50 (2x25)	



Overview of certification organizations, see page 654

Fuse plug with pull-tab

800 V / I_N 10 A
Plug width 10.4 mm / 0.409 inch



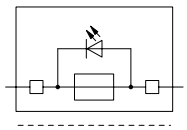

Miniature fuses

Series Item No.		Overload and short circuit protection		Short circuit protection only	
		Individual argmt.	Group argmt.	Individual argmt.	Group argmt.
		Fused disconnect terminal blocks			
2006-911	7.5	1.6 W	1.6 W	2.5 W	2.5 W
2006-921	7.5	1.6 W	1.6 W	2.5 W	2.5 W
2006-931	7.5	1.6 W	1.6 W	2.5 W	2.5 W
2006-931 /099-...	10.4	2.5 W	2.5 W	2.5 W	2.5 W
2006-931 /1099-...	10.4	2.5 W	2.5 W	2.5 W	2.5 W

Using pluggable fuse holders with rail-mount terminal blocks for control circuit protection is highly advantageous for the user, as the function and the wiring are accomplished by two separate parts:
- No additional cost for assembly and wiring
- No risk of accidental contact with live parts during disconnection of fuse plug
- If exchanging a defective fuse, the fuse plug is completely separated from the carrier terminal block. This provides changeout away from current carrying parts.
- The fuse plug can be removed by service personnel, avoiding unintentional reclosing of the circuit by another person
- Quick replacement a fuse by using a prepared "stand-by plug."

The following features of the fuse plug ensure quick and safe use:
- Optional LED indicates blown fuse
- Markable fuse plug for clear coordination to the correct carrier terminal block
- Two touch-proof test slots
- High density with only 7.5 mm width of terminal block and fuse plug width 7.4 (10.4) mm
- Instead of a fuse, a shorting link may be used as a disconnect plug

	Item No.	Pack. Unit
Fuse plug with pull-tab, with indicator lamp, gray		
Electrical ratings are given by the fuse and blown fuse indication. Leakage current in case of blown fuse: LED 2mA		
for ¼" x 1¼" miniature metric fuses		
◯ 12 ... 30 V	**2006-931/1099-541**	25
◯ 30 ... 65 V	**2006-931/1099-542**	25
◯ 120 V	**2006-931/1099-867**	25
◯ 230 V	**2006-931/1099-836**	25
◯ 380 ... 500 V	**2006-931/1099-859**	25

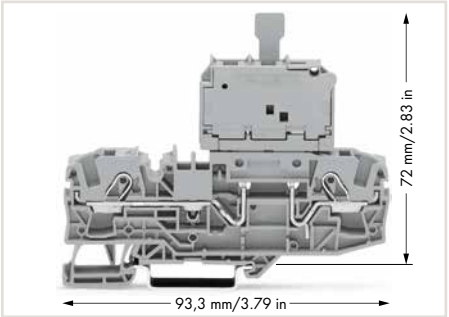

Fuse plug dimensions

Pivoting fuse holder with spare fuse holder



The end plate ensures that the fuse can only be removed when the fuse plug is pulled out.

Item-Specific Accessories

Intermediate plate, 2.9 mm thick



orange	**2006-1696**	100 (4x25)
gray	**2006-1695**	100 (4x25)

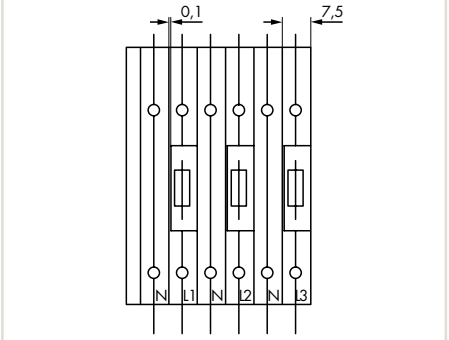

Open side of terminal block left

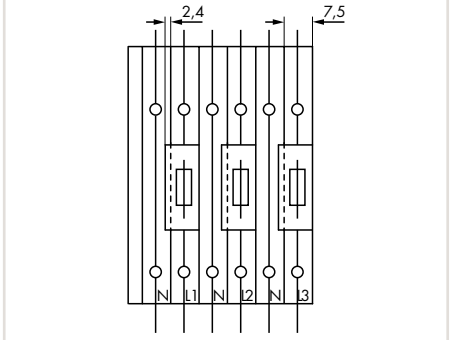

Open side of terminal block left

When using 10.4 mm wide plugs, please note:
The extra width of the plug (10.4 mm compared to 7.5 mm for carrier terminal blocks) must be compensated for with intermediate plates (2.9 mm) when building an assembly of carrier terminal blocks equipped with fuse plugs.

TOPJOB® S
Sensor and Actuator Terminal Blocks, 2000 Series
Description and Installation

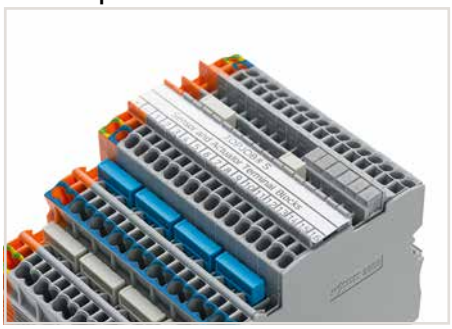

Commoning (signal level):
Commoning the signal level with push-in type jumper bars (2000 Series). Models with an LED can only be commoned in one jumper slot.
TOPJOB® S Test Plug Adapters can be used in all jumper slots.



Upper level: two independent signal pathways

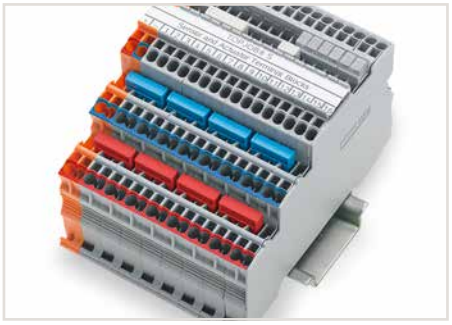

Commoning (potential level):
Commoning potential levels via push-in type jumper bars (2000 Series).



Power supply via orange supply terminal block of same profile from both the cabinet and sensor sides

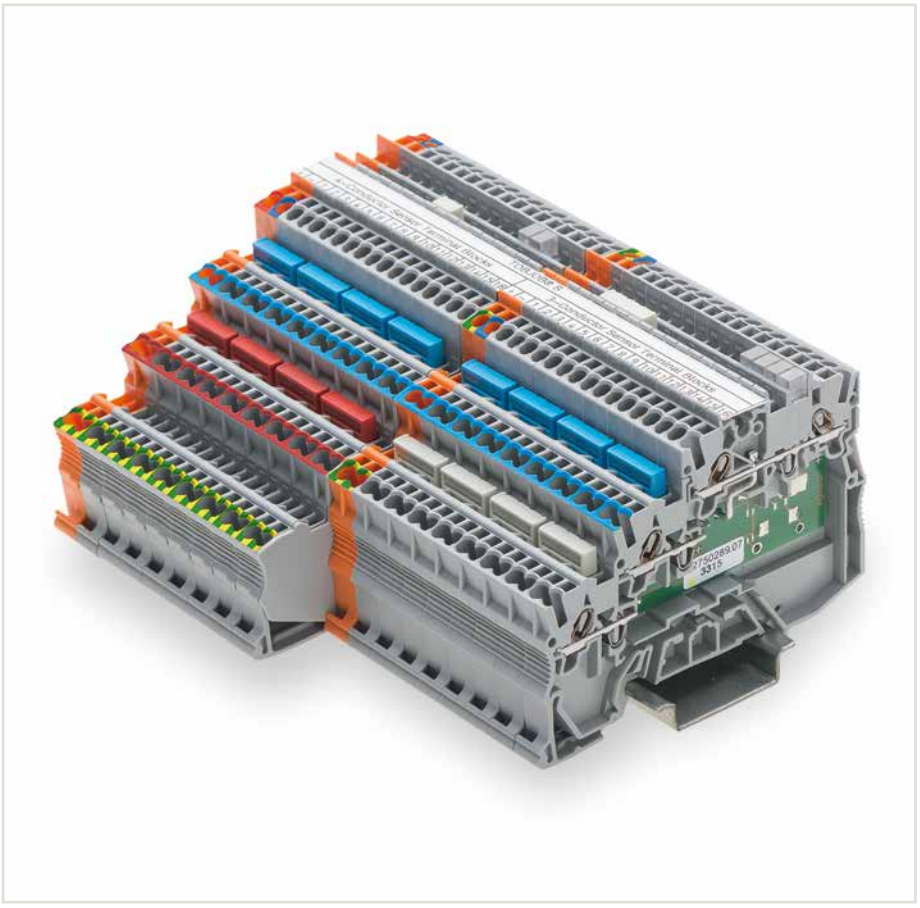

Terminal block assembly with 4-conductor sensor terminal blocks and 3-conductor actuator terminal blocks

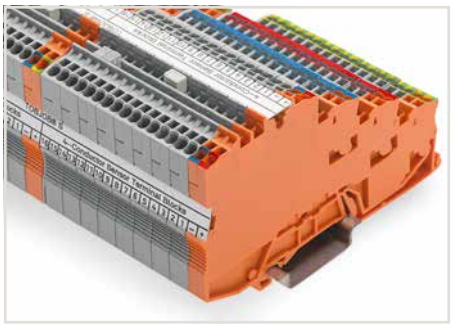

Labeling
Labeling via marking strips (2009-110) – from the top or the side.

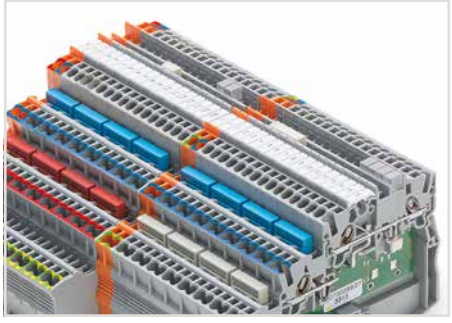

Labeling
Labeling via 3.5 mm WMB markers (793-35xx) from the top or the side – additional marking option via marker carrier.

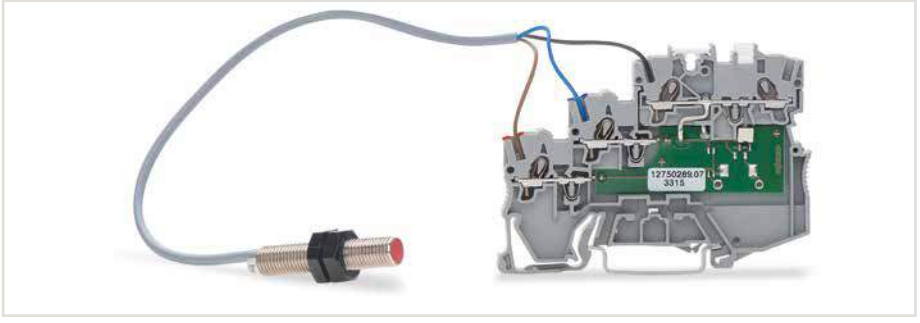

3-conductor sensor LED terminal block with a connected sensor



Commoning (potential level):
Continuous commoning in the potential levels via push-in type jumper bars for even pole numbers (2000 Series)



Potential levels: two adjacent commoning options on a current bar

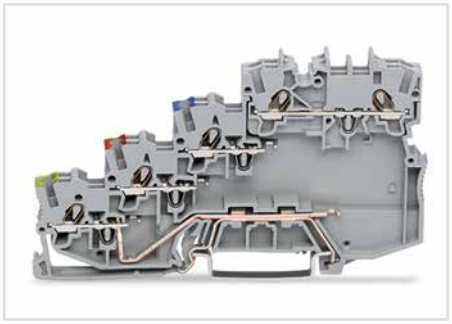

4-conductor sensor terminal block with ground contact

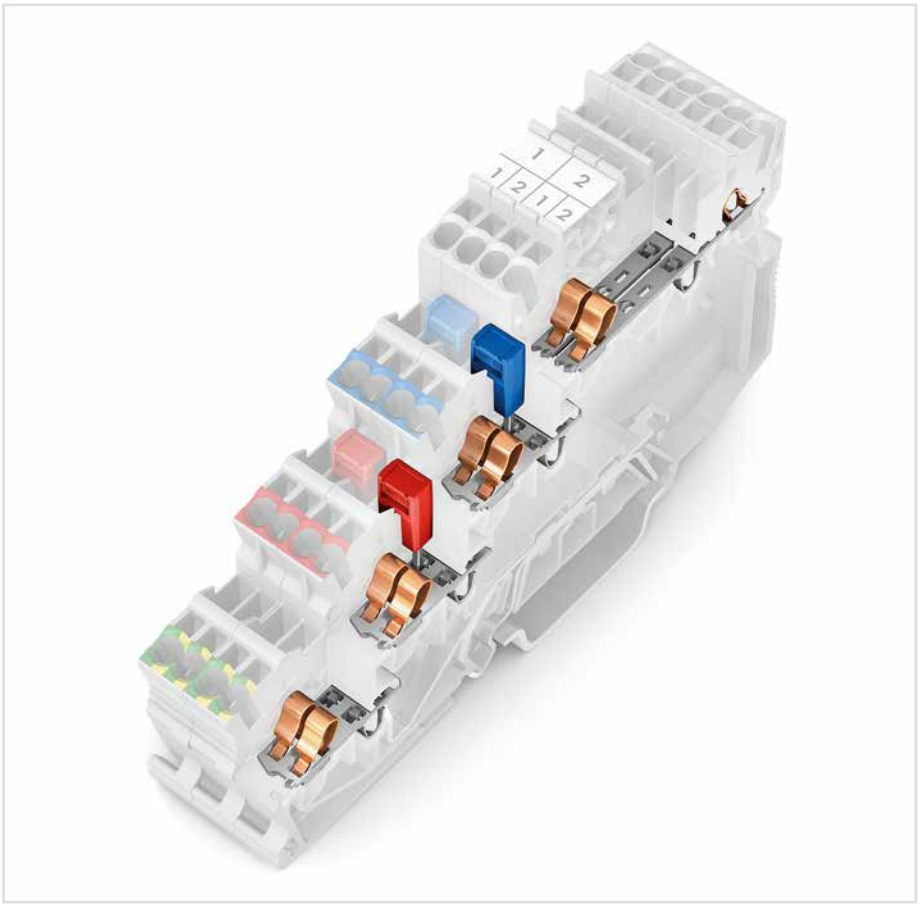

Upper level: two independent signal pathways, in 3.5 mm spacing per pole, with a dual jumper slot
Lower levels: two interconnected potential clamping units, with a single jumper slot, can be commoned in both directions



Ground commoning:
For sensor and actuator terminal blocks without ground connection to the DIN-rail, the ground connection can be performed by commoning to the terminal block with a ground foot.

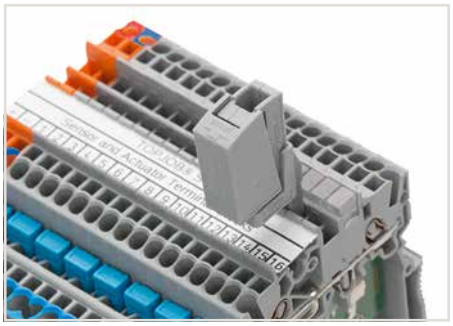

Testing via testing tap (2009-182) (up to max. 42 V).

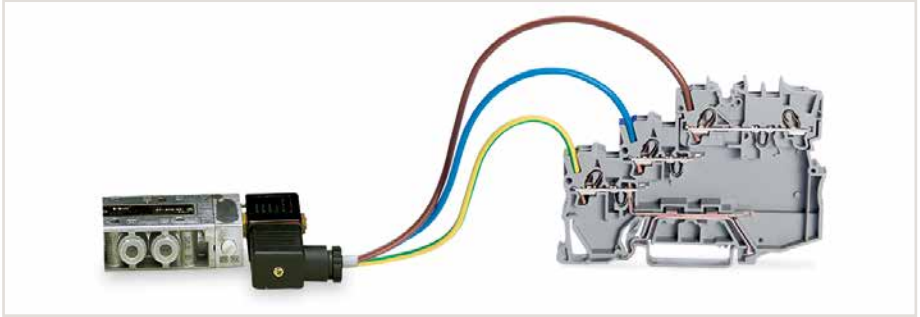

3-conductor actuator LED terminal block with a connected actuator

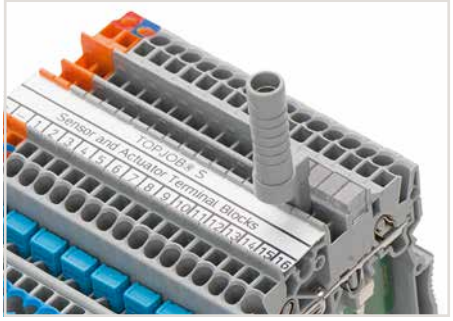

Testing via test plug adapter (2009-174) (up to max. 42 V).

PUSH-IN CAGE CLAMP®

TOPJOB® S
3-Conductor Sensor Terminal Blocks
1 (1.5) mm², 2000 Series

1

0.14 … 1 (1.5) mm² ❶ 250 V/4 kV/3 ❷ I_N 13.5 A	24 … 16 AWG 300 V, 10 A
Terminal block width 7 mm / 0.276 inch ❸ 9 … 11 mm / 0.35 … 0.43 inch	

0.14 … 1 (1.5) mm² ❶ 24 VDC I_N 13.5 A	24 … 16 AWG 24 VDC, 10 A
Terminal block width 7 mm / 0.276 inch ❸ 9 … 11 mm / 0.35 … 0.43 inch	

Note:
The double spacing per pole of this terminal block series maximizes connectivity. For example **ten** sensors may be connected using only **five** sensor terminal blocks plus a power supply terminal block.

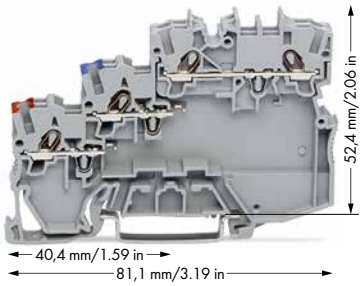

2000-5311

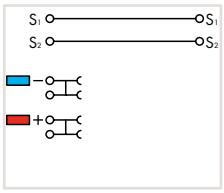

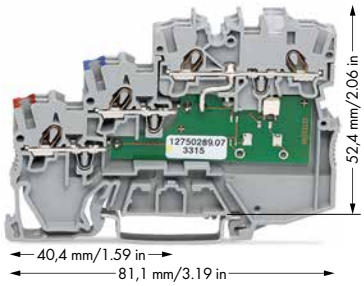

2000-5311/1102-950

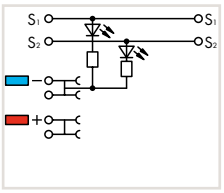

2000-5311/1101-951

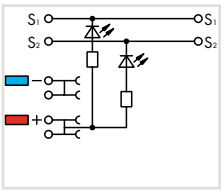

❶ Conductor range: 0.14 … 1.5 mm² "s + f-st"; Push-in termination: 0.5 … 1.5 mm² "s" and 0.5 … 0.75 mm² "insulated ferrule, 10 mm"

❷ 250 V = rated voltage
4 kV = rated surge voltage
3 = pollution degree
(see Section 14)

❸ 3.5 mm pin spacing per signal (2 x 3.5 mm = 7 mm)

❹ See application notes for:
Colored push-in type jumper bar, page 134
Push-in type wire jumper, page 138

	Item No.	Pack. Unit
3-conductor sensor terminal block		
gray	**2000-5311**	50

	Item No.	Pack. Unit
3-conductor sensor LED terminal block, for PNP (high-side) switching sensors, yellow LED		
gray	**2000-5311/1102-950**	50
3-conductor sensor LED terminal block, for NPN (low-side) switching sensors, yellow LED		
gray	**2000-5311/1101-951**	50

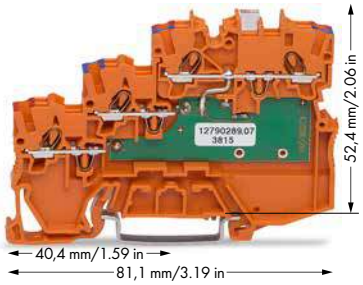

2000-5372/1102-953

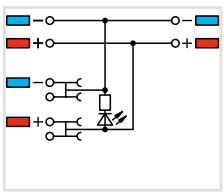

2000-5372

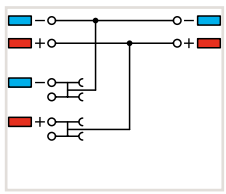

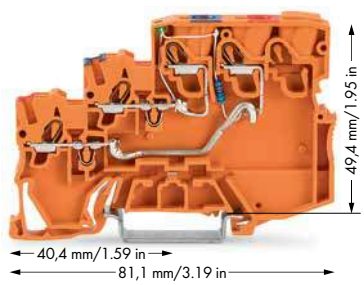

2000-5352/1102-953

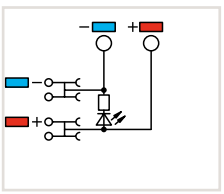

2000-5352

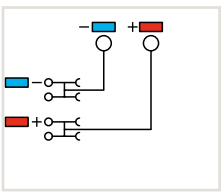

	Item No.	Pack. Unit
3-conductor sensor LED supply terminal block, 24 VDC, green LED		
orange	**2000-5372/1102-953**	15
3-conductor sensor supply terminal block, max. 250 V, internally commoned		
orange	**2000-5372**	15

	Item No.	Pack. Unit
3-conductor sensor LED supply terminal block, 24 VDC, green LED, control panel side: 2.5 (4) mm², max. 28 A		
orange	**2000-5352/1102-953**	15
3-conductor sensor supply terminal block, max. 250 V, control panel side: 2.5 (4) mm², max. 28 A		
	2000-5352	15

Accessories for 3-Conductor Terminal Blocks
WMB/Marking strips (see Section 13)

End and intermediate plate, 1 mm thick, for 3-conductor terminal blocks



gray	**2000-5391**	100 (4x25)

Push-in type jumper bar, insulated, I_N 14 A, light gray ❹



2-way	**2000-402**	200 (8x25)
3-way	**2000-403**	200 (8x25)
4-way	**2000-404**	200 (8x25)
5-way	**2000-405**	100 (4x25)
6-way	**2000-406**	100 (4x25)
7-way	**2000-407**	100 (4x25)
8-way	**2000-408**	100 (4x25)
9-way	**2000-409**	100 (4x25)
10-way	**2000-410**	100 (4x25)

Colored push-in type jumper bars,

red	**.../000-005**
blue	**.../000-006**

Push-in type jumper bar, insulated, I_N 14 A, light gray



from 1 to 3	**2000-433**	200 (8x25)
from 1 to 4	**2000-434**	200 (8x25)
from 1 to 5	**2000-435**	100 (4x25)
from 1 to 6	**2000-436**	100 (4x25)
from 1 to 7	**2000-437**	100 (4x25)
from 1 to 8	**2000-438**	100 (4x25)
from 1 to 9	**2000-439**	100 (4x25)
from 1 to 10	**2000-440**	100 (4x25)

Double-deck marker carrier, pivoting



gray	**2000-121**	50 (2x25)

Marking strip, plain, 11 mm wide, 50 m reel



white	**2009-110**	1

WMB Multi marking system, white, 10 strips with 10 markers per card, for 3.5 mm terminal block width

plain	**793-3501**	5

Operating tool with partially insulated shaft, type 1, (2.5 x 0.4) mm blade



	210-719	1

Overview of certification organizations, see page 654

PUSH-IN CAGE CLAMP®

TOPJOB® S
4-Conductor Sensor Terminal Blocks
1 (1.5) mm², 2000 Series

0.14 … 1 (1.5) mm² ❶	**24 … 16 AWG**
250 V/4 kV/3 ❷	**300 V, 10 A**
I_N 13.5 A	
Terminal block width 7 mm / 0.276 inch ❸	
9 … 11 mm / 0.35 … 0.43 inch	

0.14 … 1 (1.5) mm² ❶	**24 … 16 AWG**
24 VDC	**24 VDC, 10 A**
I_N 13.5 A	
Terminal block width 7 mm / 0.276 inch ❸	
9 … 11 mm / 0.35 … 0.43 inch	

Note:
The double spacing per pole of this terminal block series maximizes connectivity. For example **ten** sensors may be connected using only **five** sensor terminal blocks plus a power supply terminal block.

❶ Conductor range: 0.14 … 1.5 mm² "s + f-st";
Push-in termination: 0.5 … 1.5 mm² "s"
and 0.5 … 0.75 mm²
"insulated ferrule, 10 mm"

❷ 250 V = rated voltage
4 kV = rated surge voltage
3 = pollution degree
(see Section 14)

❸ 3.5 mm pin spacing per signal (2 x 3.5 mm = 7 mm)

❹ See application notes for:
Colored push-in type jumper bar, page 134
Push-in type wire jumper, page 138

❺ Ground connection via commoning to terminal blocks with ground foot

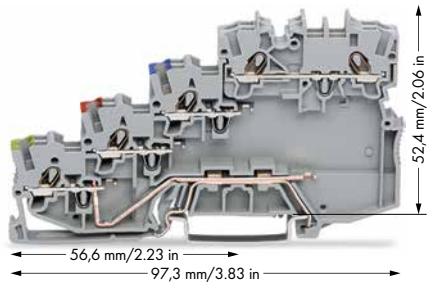

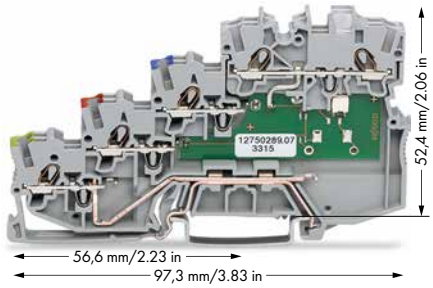

2000-5417

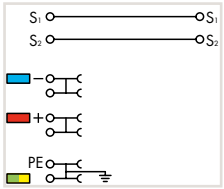

2000-5410

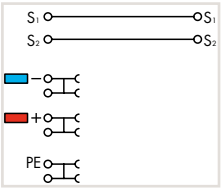

2000-5417/1102-950

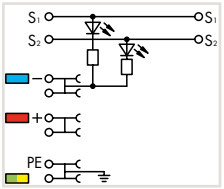

2000-5417/1101-951

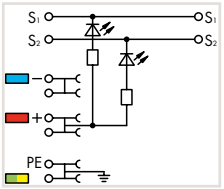

	Item No.	Pack. Unit
4-conductor sensor terminal block, with ground connection		
gray	**2000-5417**	50
gray	**2000-5410**	50 ❺

	Item No.	Pack. Unit
4-conductor sensor LED terminal block, yellow LED, for PNP (high-side) switching sensors, with ground connection		
gray	**2000-5417/1102-950**	50
gray	**2000-5410/1102-950**	50 ❺
4-conductor sensor LED terminal block, yellow LED, for NPN (low-side) switching sensors, with ground connection		
gray	**2000-5417/1101-951**	50
gray	**2000-5410/1101-951**	50 ❺

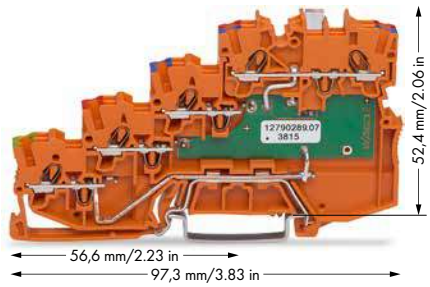

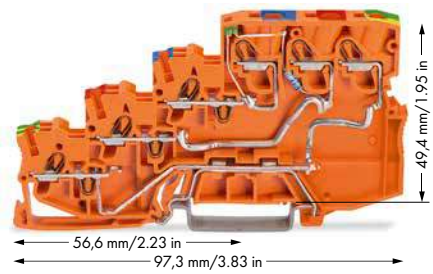

2000-5477/1102-953

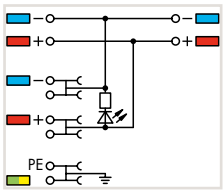

2000-5477

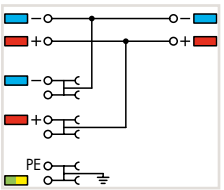

2000-5457/1102-953

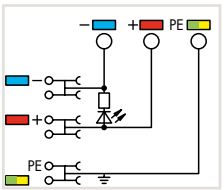

2000-5457

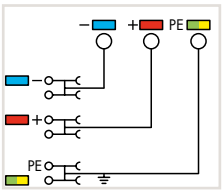

	Item No.	Pack. Unit
4-conductor sensor LED supply terminal block, 24 VDC, green LED, with ground connection		
orange	**2000-5477/1102-953**	15
4-conductor sensor supply terminal block, max. 250 V, internally commoned, with ground connection		
orange	**2000-5477**	15

	Item No.	Pack. Unit
4-conductor sensor LED supply terminal block, 24 VDC, green LED, with ground connection, control panel side: 2.5 (4) mm², max. 28 A		
orange	**2000-5457/1102-953**	15
4-conductor sensor supply terminal block, max. 250 V, with ground connection, control panel side: 2.5 (4) mm², max. 28 A		
	2000-5457	15

Accessories for 4-Conductor Terminal Blocks
WMB/Marking strips
(see Section 13)

End and intermediate plate, 1 mm thick, for 4-conductor terminal blocks



gray	**2000-5491**	100 (4x25)

Push-in type jumper bar, insulated, I_N 14 A, light gray ❹



2-way	**2000-402**	200 (8x25)
3-way	**2000-403**	200 (8x25)
4-way	**2000-404**	200 (8x25)
5-way	**2000-405**	100 (4x25)
6-way	**2000-406**	100 (4x25)
7-way	**2000-407**	100 (4x25)
8-way	**2000-408**	100 (4x25)
9-way	**2000-409**	100 (4x25)
10-way	**2000-410**	100 (4x25)

Colored push-in type jumper bars,

red	**.../000-005**
blue	**.../000-006**
yellow-green	**.../000-018**

Push-in type jumper bar, insulated, I_N 14 A, light gray



from 1 to 3	**2000-433**	200 (8x25)
from 1 to 4	**2000-434**	200 (8x25)
from 1 to 5	**2000-435**	100 (4x25)
from 1 to 6	**2000-436**	100 (4x25)
from 1 to 7	**2000-437**	100 (4x25)
from 1 to 8	**2000-438**	100 (4x25)
from 1 to 9	**2000-439**	100 (4x25)
from 1 to 10	**2000-440**	100 (4x25)

Double-deck marker carrier, pivoting



gray	**2000-121**	50 (2x25)

Marking strip, plain, 11 mm wide, 50 m reel



white	**2009-110**	1

WMB Multi marking system, white, 10 strips with 10 markers per card, for 3.5 mm terminal block width

plain	**793-3501**	5

Operating tool with partially insulated shaft, type 1, (2.5 x 0.4) mm blade



	210-719	1

PUSH-IN CAGE CLAMP®

TOPJOB® S
3-Conductor Actuator Terminal Blocks
1 (1.5) mm², 2000 Series

1

0.14 … 1 (1.5) mm² ❶ 250 V/4 kV/3 ❷ I_N 13.5 A	24 … 16 AWG 300 V, 10 A
Terminal block width 7 mm / 0.276 inch ❸ 9 … 11 mm / 0.35 … 0.43 inch	

0.14 … 1 (1.5) mm² ❶ 24 VDC I_N 13.5 A	24 … 16 AWG 24 VDC, 10 A
Terminal block width 7 mm / 0.276 inch ❸ 9 … 11 mm / 0.35 … 0.43 inch	

Note:
The double spacing per pole of this terminal block series maximizes connectivity. For example **ten** sensors may be connected using only **five** sensor terminal blocks plus a power supply terminal block.

❶ Conductor range: 0.14 … 1.5 mm² "s + f-st"; Push-in termination: 0.5 … 1.5 mm² "s" and 0.5 … 0.75 mm² "insulated ferrule, 10 mm"

❷ 250 V = rated voltage
4 kV = rated surge voltage
3 = pollution degree
(see Section 14)

❸ 3.5 mm pin spacing per signal (2 x 3.5 mm = 7 mm)

❹ See application notes for:
Colored push-in type jumper bar, page 134
Push-in type wire jumper, page 138

❺ Ground connection via commoning to terminal blocks with ground foot

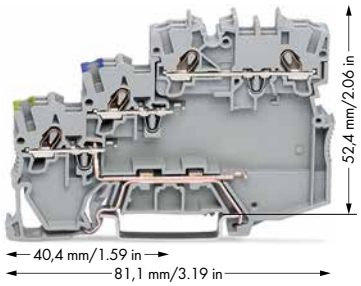

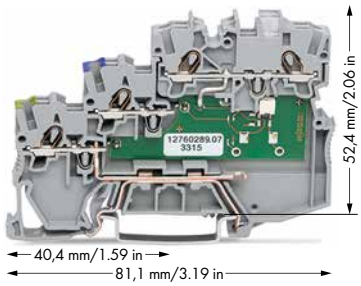

2000-5317/102-000 | 2000-5310/101-000 | 2000-5317/1102-950 | 2000-5310/1101-951

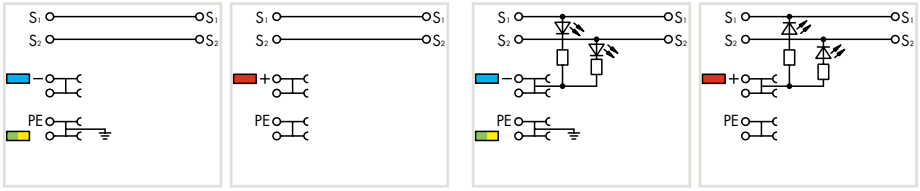

Item No.	Pack. Unit
3-conductor actuator terminal block, for PNP (high-side) switching actuators, with ground connection	
gray **2000-5317/102-000**	50
gray **2000-5310/102-000**	50 ❺
3-conductor actuator terminal block, for NPN (low-side) switching actuators, with ground connection	
gray **2000-5317/101-000**	50
gray **2000-5310/101-000**	50 ❺

Item No.	Pack. Unit
3-conductor actuator terminal block, yellow LED, for PNP (high-side) switching actuators, with ground connection	
gray **2000-5317/1102-950**	50
gray **2000-5310/1102-950**	50 ❺
3-conductor actuator terminal block, yellow LED, for NPN (low-side) switching actuators, with ground connection	
gray **2000-5317/1101-951**	50
gray **2000-5310/1101-951**	50 ❺

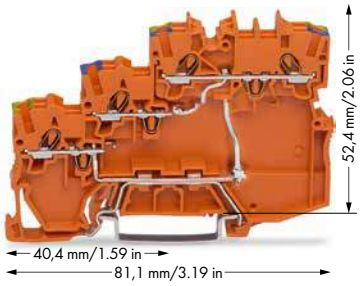

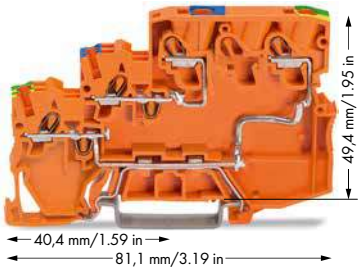

2000-5377/102-000 | 2000-5377/101-000 | 2000-5357/102-000 | 2000-5357/101-000

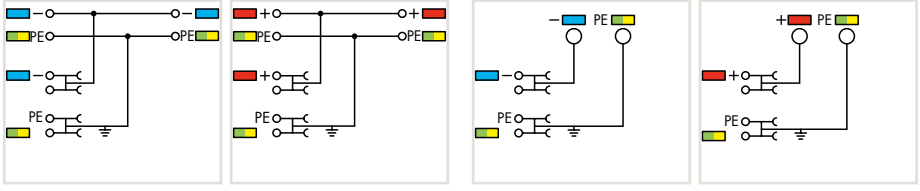

Item No.	Pack. Unit
3-conductor actuator supply terminal block, max. 250 V, for PNP (high-side) switching actuators, with ground connection, internally commoned	
orange **2000-5377/102-000**	15
3-conductor actuator supply terminal block, max. 250 V, for NPN (low-side) switching actuators, with ground connection	
orange **2000-5377/101-000**	15

Item No.	Pack. Unit
3-conductor actuator supply terminal block, max. 250 V, control panel side: 2.5 (4) mm², max. 28 A, for PNP (high-side) switching actuators, with ground connection	
orange **2000-5357/102-000**	15
3-conductor actuator supply terminal block, max. 250 V, control panel side: 2.5 (4) mm², max. 28 A, for NPN (low-side) switching actuators, with ground connection	
orange **2000-5357/101-000**	15

Accessories for 3-Conductor Terminal Blocks
WMB/Marking strips (see Section 13)

End and intermediate plate, 1 mm thick, for 3-conductor terminal blocks



gray **2000-5391** 100 (4x25)

Push-in type jumper bar, insulated, I_N 14 A, light gray ❹



2-way	**2000-402**	200 (8x25)
3-way	**2000-403**	200 (8x25)
4-way	**2000-404**	200 (8x25)
5-way	**2000-405**	100 (4x25)
6-way	**2000-406**	100 (4x25)
7-way	**2000-407**	100 (4x25)
8-way	**2000-408**	100 (4x25)
9-way	**2000-409**	100 (4x25)
10-way	**2000-410**	100 (4x25)

Colored push-in type jumper bars,

red	.../000-005
blue	.../000-006
yellow-green	.../000-018

Push-in type jumper bar, insulated, I_N 14 A, light gray



from 1 to 3	**2000-433**	200 (8x25)
from 1 to 4	**2000-434**	200 (8x25)
from 1 to 5	**2000-435**	100 (4x25)
from 1 to 6	**2000-436**	100 (4x25)
from 1 to 7	**2000-437**	100 (4x25)
from 1 to 8	**2000-438**	100 (4x25)
from 1 to 9	**2000-439**	100 (4x25)
from 1 to 10	**2000-440**	100 (4x25)

Double-deck marker carrier, pivoting



gray **2000-121** 50 (2x25)

Marking strip, plain, 11 mm wide, 50 m reel



white **2009-110** 1

WMB Multi marking system, white, 10 strips with 10 markers per card, for 3.5 mm terminal block width

plain **793-3501** 5

Operating tool with partially insulated shaft, type 1, (2.5 x 0.4) mm blade



210-719 1

Overview of certification organizations, see page 654

PUSH-IN CAGE CLAMP®

TOPJOB® S
Sensor and Actuator Terminal Blocks with a Pluggable Signal Level, 2020 Series
Description and Installation

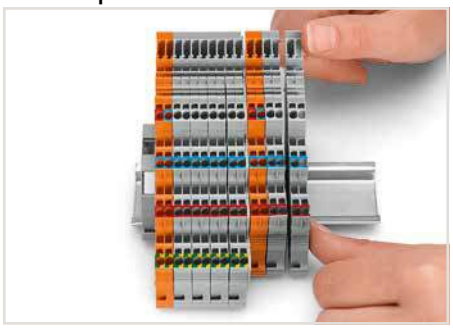

Snap individual terminal blocks onto the carrier rail and slide together.



Separate terminal block assembly and slide individual terminal blocks laterally using an operating tool.

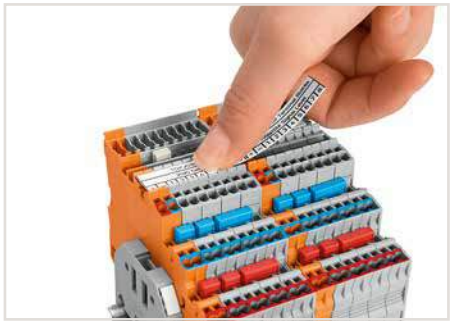

Labeling terminal blocks via marking strips (2009-110) or 3.5 mm wide WMB markers (793-35xx) – from the top or the side.

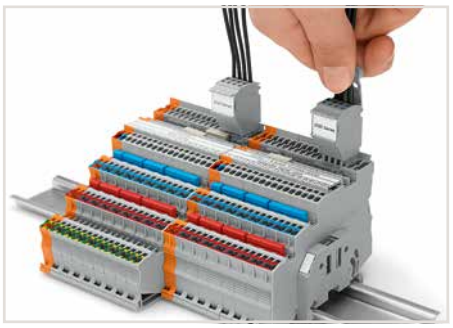

Removing a female plug via conductor bundle provided with strain relief plate.

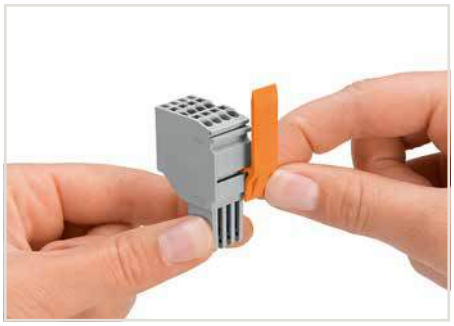

Slide the locking lever into position.

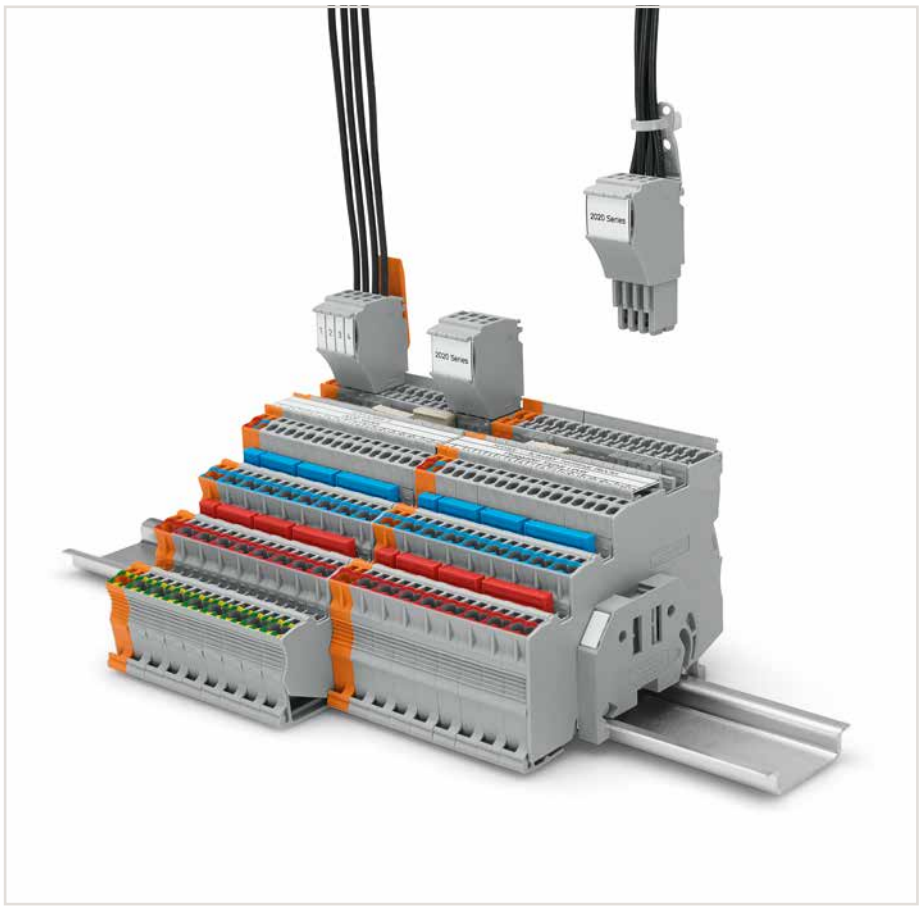

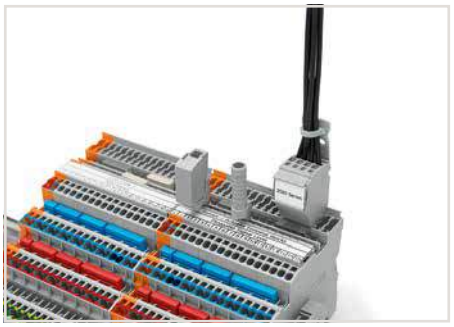

Testing via testing tap (2009-182) or test plug adapter (2009-174) (up to max. 42 V).



Insert coding pin into the corresponding slot and twist it off.

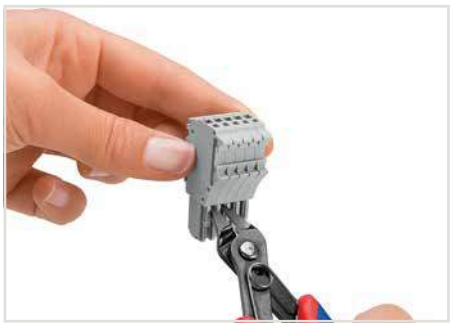

Remove the coding finger using a cutting tool.

PUSH-IN CAGE CLAMP®

TOPJOB® S
3-Conductor Sensor Terminal Blocks, with a Pluggable Signal Level
1 (1.5) mm², 2020 Series

0.14 … 1 (1.5) mm² ❶ **250 V/4 kV/3 ❷** **I_N 13.5 A**	**24 … 16 AWG** **300 V, 10 A**
Terminal block width 7 mm / 0.276 inch ❸ **9 … 11 mm / 0.35 … 0.43 inch**	

0.14 … 1 (1.5) mm² ❶ **24 VDC** **I_N 13.5 A**	**24 … 16 AWG** **24 VDC, 10 A**
Terminal block width 7 mm / 0.276 inch ❸ **9 … 11 mm / 0.35 … 0.43 inch**	

Note:
The double spacing per pole of this terminal block series maximizes connectivity. For example **ten** sensors may be connected using only **five** sensor terminal blocks plus a power supply terminal block.

1

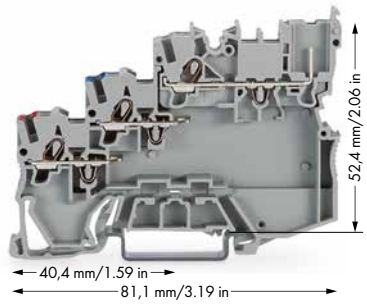

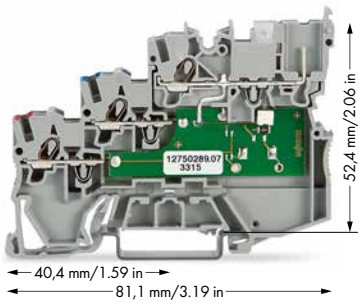

2020-5311

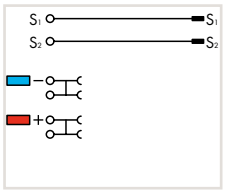

2020-5311/1102-950

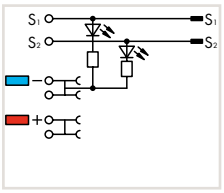

Item No.		Pack. Unit
3-conductor sensor terminal block, with pluggable signal level		
gray	**2020-5311**	50

Note:
According to EN 61984, pluggable connectors without current interrupting capacity must not be mated or unmated when live or under load. An appropriate end plate must be applied to the carrier terminal blocks after each female plug.

Item No.		Pack. Unit
3-conductor sensor LED terminal block, for PNP (high-side) switching sensors, yellow LED, with pluggable signal level		
gray	**2020-5311/1102-950**	50

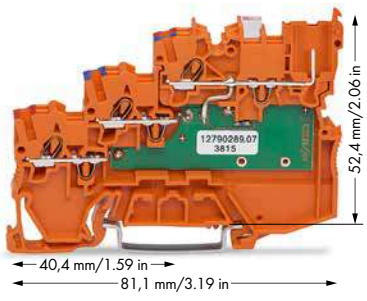

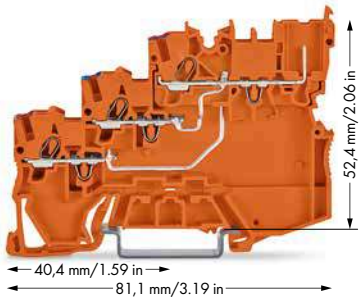

2020-5372/1102-953

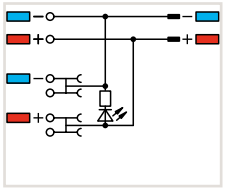

2020-5372

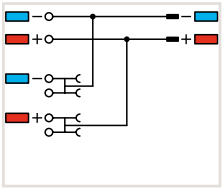

Item No.		Pack. Unit
3-conductor sensor LED supply terminal block, 24 VDC, green LED, with pluggable signal level		
orange	**2020-5372/1102-953**	15

Item No.		Pack. Unit
3-conductor sensor supply terminal block, max. 250 V, internally commoned, with pluggable signal level		
orange	**2020-5372**	15

❶ Conductor range: 0.14 … 1.5 mm² "s + f-st"; Push-in termination: 0.5 … 1.5 mm² "s" and 0.5 … 0.75 mm² "insulated ferrule, 10 mm"

❷ 250 V = rated voltage
4 kV = rated surge voltage
3 = pollution degree
(see Section 14)

❸ 3.5 mm pin spacing per signal (2 x 3.5 mm = 7 mm)

❹ See application notes for:
Colored push-in type jumper bar, page 134
Push-in type wire jumper, page 138

Accessories for 3-Conductor Terminal Blocks
WMB/Marking strips
(see Section 13)

End and intermediate plate, 1 mm thick, for 3-conductor terminal blocks



gray	**2020-5391**	100 (4x25)

Push-in type jumper bar, insulated, I_N 14 A, light gray ❹



2-way	**2000-402**	200 (8x25)
3-way	**2000-403**	200 (8x25)
4-way	**2000-404**	200 (8x25)
5-way	**2000-405**	100 (4x25)
6-way	**2000-406**	100 (4x25)
7-way	**2000-407**	100 (4x25)
8-way	**2000-408**	100 (4x25)
9-way	**2000-409**	100 (4x25)
10-way	**2000-410**	100 (4x25)

Colored push-in type jumper bars,

red	**.../000-005**
blue	**.../000-006**

Push-in type jumper bar, insulated, I_N 14 A, light gray



from 1 to 3	**2000-433**	200 (8x25)
from 1 to 4	**2000-434**	200 (8x25)
from 1 to 5	**2000-435**	100 (4x25)
from 1 to 6	**2000-436**	100 (4x25)
from 1 to 7	**2000-437**	100 (4x25)
from 1 to 8	**2000-438**	100 (4x25)
from 1 to 9	**2000-439**	100 (4x25)
from 1 to 10	**2000-440**	100 (4x25)

Carrier with 6 coding pins, for coding female plugs



orange	**2020-100**	100 (4x25)

Locking lever, 4.8 mm wide



orange	**2022-142**	100 (4x25)
gray	**2022-141**	100 (4x25)

Locking lever, 9.6 mm wide



orange	**2022-152**	100 (4x25)
gray	**2022-151**	100 (4x25)

Test plug adapter, for 4 mm Ø test plug

gray	**2009-174**	100 (4x25)

PUSH-IN CAGE CLAMP®

TOPJOB® S
4-Conductor Sensor Terminal Blocks, with a Pluggable Signal Level
1 (1.5) mm², 2020 Series

1

0.14 … 1 (1.5) mm² ❶ 250 V/4 kV/3 ❷ I_N 13.5 A	24 … 16 AWG 300 V, 10 A
Terminal block width 7 mm / 0.276 inch ❸ 9 … 11 mm / 0.35 … 0.43 inch	

0.14 … 1 (1.5) mm² ❶ 24 VDC I_N 13.5 A	24 … 16 AWG 24 VDC, 10 A
Terminal block width 7 mm / 0.276 inch ❸ 9 … 11 mm / 0.35 … 0.43 inch	

Note:
The double spacing per pole of this terminal block series maximizes connectivity. For example **ten** sensors may be connected using only **five** sensor terminal blocks plus a power supply terminal block.

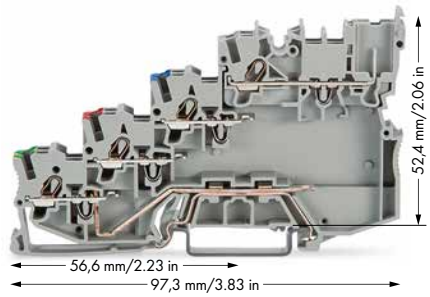

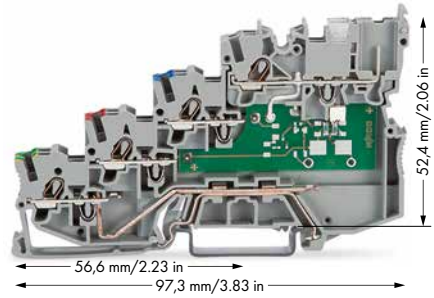

❶ Conductor range: 0.14 … 1.5 mm² "s + f-st"; Push-in termination: 0.5 … 1.5 mm² "s" and 0.5 … 0.75 mm² "insulated ferrule, 10 mm"

❷ 250 V = rated voltage
4 kV = rated surge voltage
3 = pollution degree
(see Section 14)

❸ 3.5 mm pin spacing per signal (2 x 3.5 mm = 7 mm)

❹ See application notes for:
Colored push-in type jumper bar, page 134
Push-in type wire jumper, page 138

2020-5417

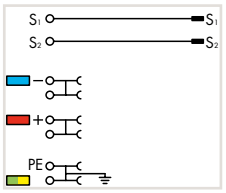

2020-5417/1102-950

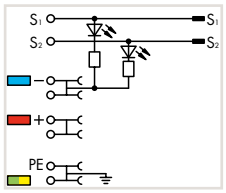

Item No.		Pack. Unit
4-conductor sensor terminal block, with ground connection, with pluggable signal level		
gray	**2020-5417**	50

Note:
According to EN 61984, pluggable connectors without current interrupting capacity must not be mated or unmated when live or under load. An appropriate end plate must be applied to the carrier terminal blocks after each female plug.

Item No.		Pack. Unit
4-conductor sensor LED terminal block, yellow LED, for PNP (high-side) switching sensors, with ground connection, with pluggable signal level		
gray	**2020-5417/1102-950**	50

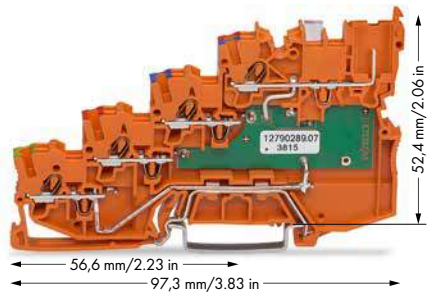

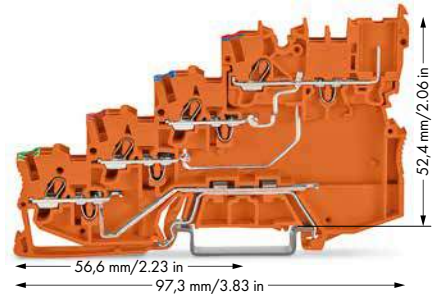

2020-5477/1102-953

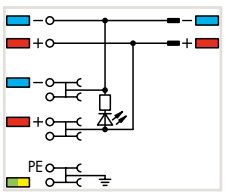

2020-5477

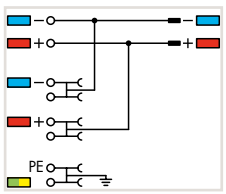

Item No.		Pack. Unit
4-conductor sensor LED supply terminal block, 24 VDC, green LED, with ground connection, with pluggable signal level		
orange	**2020-5477/1102-953**	15

Item No.		Pack. Unit
4-conductor sensor supply terminal block, max. 250 V, internally commoned, with ground connection, with pluggable signal level		
orange	**2020-5477**	15

Accessories for 4-Conductor Terminal Blocks
WMB/Marking strips (see Section 13)

End and intermediate plate, 1 mm thick, for 4-conductor terminal blocks



gray	**2020-5491**	100 (4x25)

Push-in type jumper bar, insulated, I_N 14 A, light gray ❹



2-way	**2000-402**	200 (8x25)
3-way	**2000-403**	200 (8x25)
4-way	**2000-404**	200 (8x25)
5-way	**2000-405**	100 (4x25)
6-way	**2000-406**	100 (4x25)
7-way	**2000-407**	100 (4x25)
8-way	**2000-408**	100 (4x25)
9-way	**2000-409**	100 (4x25)
10-way	**2000-410**	100 (4x25)

Colored push-in type jumper bars,

red	.../000-005
blue	.../000-006
yellow-green	.../000-018

Push-in type jumper bar, insulated, I_N 14 A, light gray



from 1 to 3	**2000-433**	200 (8x25)
from 1 to 4	**2000-434**	200 (8x25)
from 1 to 5	**2000-435**	100 (4x25)
from 1 to 6	**2000-436**	100 (4x25)
from 1 to 7	**2000-437**	100 (4x25)
from 1 to 8	**2000-438**	100 (4x25)
from 1 to 9	**2000-439**	100 (4x25)
from 1 to 10	**2000-440**	100 (4x25)

Carrier with 6 coding pins, for coding female plugs



orange	**2020-100**	100 (4x25)

Locking lever, 4.8 mm wide



orange	**2022-142**	100 (4x25)
gray	**2022-141**	100 (4x25)

Locking lever, 9.6 mm wide



orange	**2022-152**	100 (4x25)
gray	**2022-151**	100 (4x25)

Test plug adapter, for 4 mm Ø test plug



gray	**2009-174**	100 (4x25)

Overview of certification organizations, see page 654

PUSH-IN CAGE CLAMP®

TOPJOB® S
3-Conductor Actuator Terminal Blocks, with a Pluggable Signal Level
1 (1.5) mm², 2020 Series

0.14 … 1 (1.5) mm² ❶ **250 V/4 kV/3 ❷** **I_N 13.5 A**	**24 … 16 AWG** **300 V, 10 A**
Terminal block width 7 mm / 0.276 inch ❸ **9 … 11 mm / 0.35 … 0.43 inch**	

0.14 … 1 (1.5) mm² ❶ **24 VDC** **I_N 13.5 A**	**24 … 16 AWG** **24 VDC, 10 A**
Terminal block width 7 mm / 0.276 inch ❸ **9 … 11 mm / 0.35 … 0.43 inch**	

Note:
The double spacing per pole of this terminal block series maximizes connectivity. For example **ten** sensors may be connected using only **five** sensor terminal blocks plus a power supply terminal block.

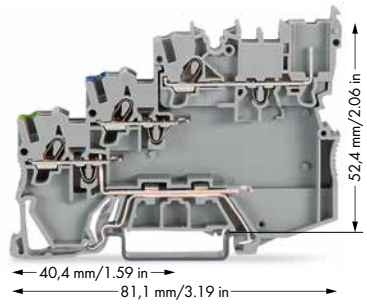

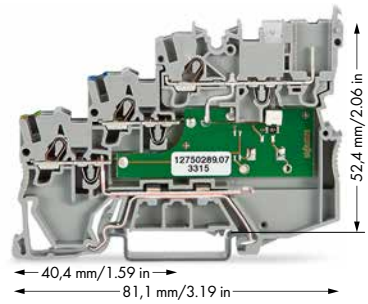

2020-5317/102-000

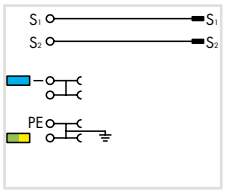

2020-5317/1102-950

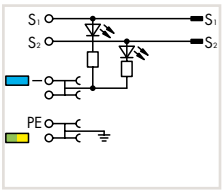

Item No.	Pack. Unit
3-conductor actuator terminal block, for PNP (high-side) switching actuators, with ground connection, with pluggable signal level	
gray **2020-5317/102-000**	50
Note:	
According to EN 61984, pluggable connectors without current interrupting capacity must not be mated or unmated when live or under load. An appropriate end plate must be applied to the carrier terminal blocks after each female plug.	

Item No.	Pack. Unit
3-conductor actuator terminal block, yellow LED, for PNP (high-side) switching actuators, with ground connection, with pluggable signal level	
gray **2020-5317/1102-950**	50

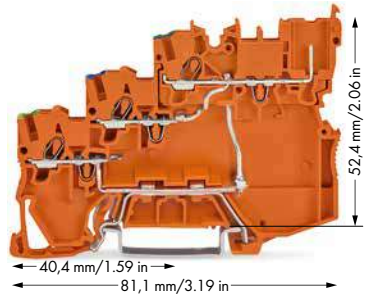

2020-5377/102-000

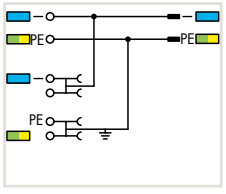

Item No.	Pack. Unit
3-conductor actuator supply terminal block, for PNP (high-side) switching actuators, with ground connection, internally commoned, with pluggable signal level	
orange **2020-5377/102-000**	15

❶ Conductor range: 0.14 … 1.5 mm² "s + f-st"; Push-in termination: 0.5 … 1.5 mm² "s" and 0.5 … 0.75 mm² "insulated ferrule, 10 mm"

❷ 250 V = rated voltage
4 kV = rated surge voltage
3 = pollution degree
(see Section 14)

❸ 3.5 mm pin spacing per signal (2 x 3.5 mm = 7 mm)

❹ See application notes for:
Colored push-in type jumper bar, page 134
Push-in type wire jumper, page 138

Accessories for 3-Conductor Terminal Blocks
WMB/Marking strips
(see Section 13)

End and intermediate plate, 1 mm thick, for 3-conductor terminal blocks



gray	**2020-5391**	100 (4x25)

Push-in type jumper bar, insulated, I_N 14 A, light gray ❹



2-way	**2000-402**	200 (8x25)
3-way	**2000-403**	200 (8x25)
4-way	**2000-404**	200 (8x25)
5-way	**2000-405**	100 (4x25)
6-way	**2000-406**	100 (4x25)
7-way	**2000-407**	100 (4x25)
8-way	**2000-408**	100 (4x25)
9-way	**2000-409**	100 (4x25)
10-way	**2000-410**	100 (4x25)

Colored push-in type jumper bars,

red	**.../000-005**
blue	**.../000-006**
yellow-green	**.../000-018**

Push-in type jumper bar, insulated, I_N 14 A, light gray



from 1 to 3	**2000-433**	200 (8x25)
from 1 to 4	**2000-434**	200 (8x25)
from 1 to 5	**2000-435**	100 (4x25)
from 1 to 6	**2000-436**	100 (4x25)
from 1 to 7	**2000-437**	100 (4x25)
from 1 to 8	**2000-438**	100 (4x25)
from 1 to 9	**2000-439**	100 (4x25)
from 1 to 10	**2000-440**	100 (4x25)

Carrier with 6 coding pins, for coding female plugs



orange	**2020-100**	100 (4x25)

Locking lever, 4.8 mm wide



orange	**2022-142**	100 (4x25)
gray	**2022-141**	100 (4x25)

Locking lever, 9.6 mm wide



orange	**2022-152**	100 (4x25)
gray	**2022-151**	100 (4x25)

Test plug adapter, for 4 mm Ø test plug

gray	**2009-174**	100 (4x25)

TOPJOB® S
Diode Terminal Blocks and LED Terminal Blocks
1.5 (2.5) mm², 2001 Series

1

0.25 … 1.5 (2.5) mm² ❶ | 22 … 14 AWG **U_N 250 V, U_{RM} 1000 V** **1N4007 - 0.5 A continuous current** **Terminal block width 4.2 mm / 0.165 inch** **9 … 11 mm / 0.35 … 0.43 inch**	**0.25 … 1.5 (2.5) mm² ❶ | 22 … 14 AWG** **U_N 250 V, U_{RM} 1000 V** **1N4007 - 0.5 A continuous current** **Terminal block width 4.2 mm / 0.165 inch** **9 … 11 mm / 0.35 … 0.43 inch**	**0.25 … 1.5 (2.5) mm² ❶ | 22 … 14 AWG** **24 VDC** **I_F 0.025 A max.** **Terminal block width 4.2 mm / 0.165 inch** **9 … 11 mm / 0.35 … 0.43 inch**

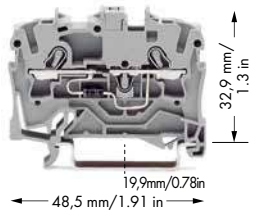

2001-1211/1000-411 2001-1211/1000-410

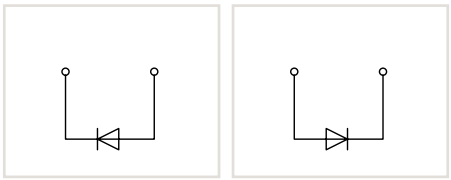

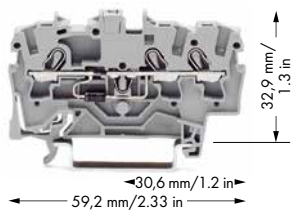

2001-1311/1000-411 2001-1311/1000-410

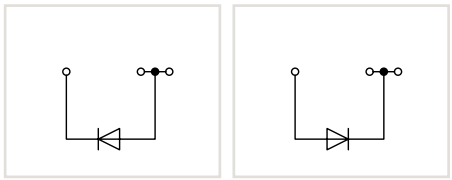

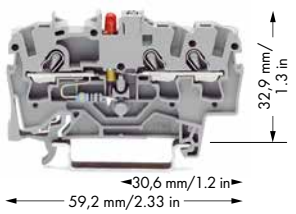

2001-1321/1000-413 2001-1321/1000-434

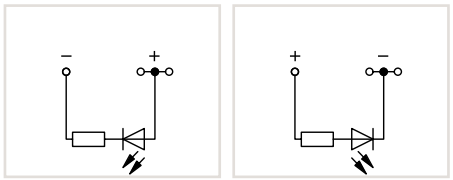

Item No.		Pack. Unit
2-conductor diode terminal block, with 1N4007 diode		
◯ gray	**2001-1211/1000-411**	100
◯ gray	**2001-1211/1000-410**	100

Item No.		Pack. Unit
3-conductor diode terminal block, with 1N4007 diode		
◯ gray	**2001-1311/1000-411**	100
◯ gray	**2001-1311/1000-410**	100

Item No.		Pack. Unit
3-conductor LED terminal block, with red LED Notice: This LED terminal block cannot be commoned with push-in type jumper bars!		
◯ gray	**2001-1321/1000-413**	100
◯ gray	**2001-1321/1000-434**	100

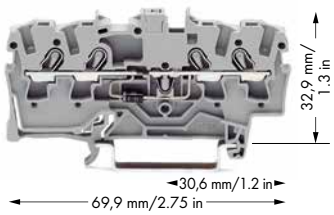

2001-1411/1000-411 2001-1411/1000-410

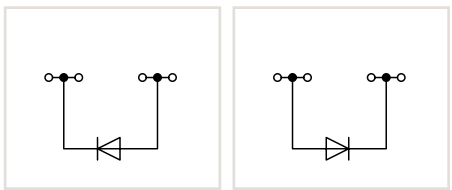

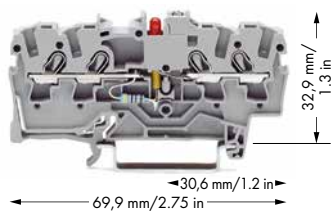

2001-1421/1000-413 2001-1421/1000-434

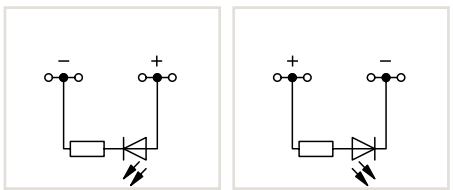

	Item No.	Pack. Unit
Through terminal blocks with same profile, see page 30	4-conductor diode terminal block, with 1N4007 diode	
◯ gray	**2001-1411/1000-411**	100
◯ gray	**2001-1411/1000-410**	100

Item No.		Pack. Unit
4-conductor LED terminal block, with red LED Notice: This LED terminal block cannot be commoned with push-in type jumper bars!		
◯ gray	**2001-1421/1000-413**	100
◯ gray	**2001-1421/1000-434**	100

Overview of certification organizations, see page 654

PUSH-IN CAGE CLAMP®

TOPJOB® S
Diode Terminal Blocks and LED Terminal Blocks
Circuit Configuration Examples

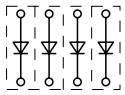

Open diode gates can be created using the following terminal blocks:
2001-1211/1000-410 or 2001-1211/1000-411



These diode terminal blocks have been specially developed for custom diode circuits, such as lamp test and collective fault signal circuits.

❶ Conductor range: 0.25 … 2.5 mm² “s + f-st”; Push-in termination: 0.5 … 2.5 mm² “s” and 0.75 … 1.5 mm² “insulated ferrules, 12 mm”

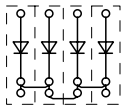

Polarized diode gates with a common cathode can be created using the following terminal blocks:
2001-1311/1000-410 or 2001-1311/1000-411

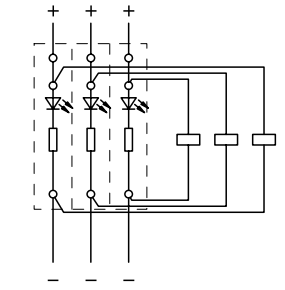

Circuit-related voltage indications can be created using the following terminal blocks:
2001-1321/1000-434 or 2001-1321/1000-413

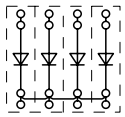

Polarized diode gates with a common cathode can be created using the following terminal blocks:
2001-1411/1000-410 or 2001-1411/1000-411

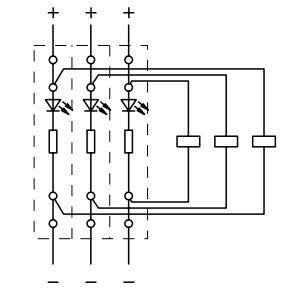

Circuit-related voltage indications can be created using the following terminal blocks:
2001-1421/1000-434 or 2001-1421/1000-413

2001 Series Accessories

Appropriate marking system (see Section 13)

Insulation stop, 5 pcs/strip, 0.25 … 0.5 mm²			
	light gray	**2001-171**	200 (8x25)
Push-in type jumper bar, insulated, I_N 18 A, light gray			
	2-way	**2001-402**	200 (8x25)
	3-way	**2001-403**	200 (8x25)
	4-way	**2001-404**	200 (8x25)
	5-way	**2001-405**	100 (4x25)
	6-way	**2001-406**	100 (4x25)
	7-way	**2001-407**	100 (4x25)
	8-way	**2001-408**	100 (4x25)
	9-way	**2001-409**	100 (4x25)
	10-way	**2001-410**	100 (4x25)
Push-in type jumper bar, insulated, I_N 18 A, light gray			
	from 1 to 3	**2001-433**	200 (8x25)
	from 1 to 4	**2001-434**	200 (8x25)
	from 1 to 5	**2001-435**	100 (4x25)
	from 1 to 6	**2001-436**	100 (4x25)
	from 1 to 7	**2001-437**	100 (4x25)
	from 1 to 8	**2001-438**	100 (4x25)
	from 1 to 9	**2001-439**	100 (4x25)
	from 1 to 10	**2001-440**	100 (4x25)

TOPJOB® S
Diode Terminal Blocks and LED Terminal Blocks
2.5 (4) mm², 2002 Series

1

0.25 … 2.5 (4) mm² ❶ | 22 … 12 AWG **U_N 250 V, U_{RM} 1000 V** **1N4007 - 0.5 A continuous current** **Terminal block width 5.2 mm / 0.205 inch** **10 … 12 mm / 0.39 … 0.47 inch**	**0.25 … 2.5 (4) mm² ❶ | 22 … 12 AWG** **U_N 250 V, U_{RM} 1000 V** **1N4007 - 0.5 A continuous current** **Terminal block width 5.2 mm / 0.205 inch** **10 … 12 mm / 0.39 … 0.47 inch**	**0.25 … 2.5 (4) mm² ❶ | 22 … 12 AWG** **24 VDC** **I_F 0.025 A max.** **Terminal block width 5.2 mm / 0.205 inch** **10 … 12 mm / 0.39 … 0.47 inch**

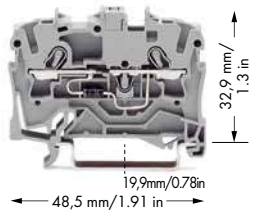

2002-1211/1000-411 2002-1211/1000-410

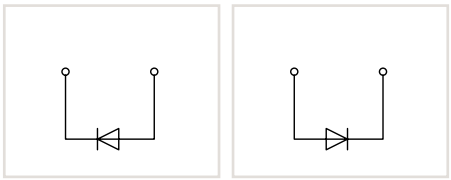

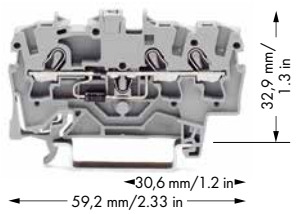

2002-1311/1000-411 2002-1311/1000-410

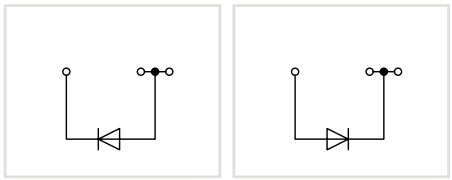

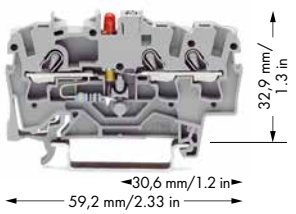

2002-1321/1000-413 2002-1321/1000-434

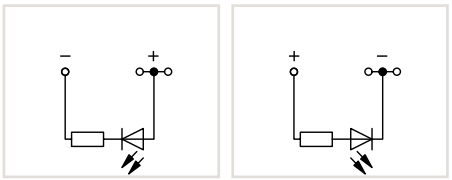

	Item No.	Pack. Unit
2-conductor diode terminal block, with 1N4007 diode		
◯ gray	**2002-1211/1000-411**	100
◯ gray	**2002-1211/1000-410**	100

	Item No.	Pack. Unit
3-conductor diode terminal block, with 1N4007 diode		
◯ gray	**2002-1311/1000-411**	100
◯ gray	**2002-1311/1000-410**	100

	Item No.	Pack. Unit
3-conductor LED terminal block, with red LED Notice: This LED terminal block cannot be commoned with push-in type jumper bars!		
◯ gray	**2002-1321/1000-413**	100
◯ gray	**2002-1321/1000-434**	100

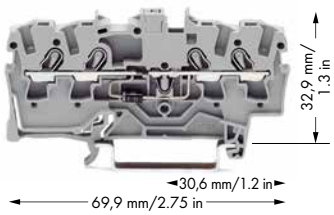

2002-1411/1000-411 2002-1411/1000-411

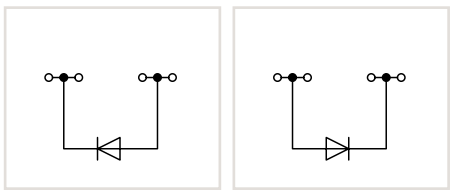

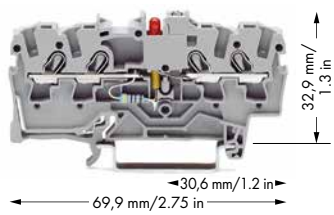

2002-1421/1000-413 2002-1421/1000-434

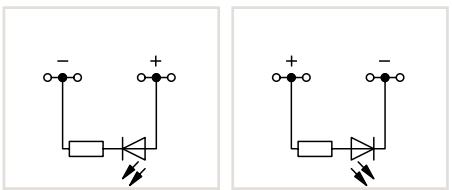

	Item No.	Pack. Unit
Through terminal blocks with same profile, see page 32	4-conductor diode terminal block, with 1N4007 diode	
◯ gray	**2002-1411/1000-411**	100
◯ gray	**2002-1411/1000-410**	100

	Item No.	Pack. Unit
4-conductor LED terminal block, with red LED Notice: This LED terminal block cannot be commoned with push-in type jumper bars!		
◯ gray	**2002-1421/1000-413**	100
◯ gray	**2002-1421/1000-434**	100

Overview of certification organizations, see page 654

TOPJOB® S
Diode Terminal Blocks and LED Terminal Blocks
Circuit Configuration Examples

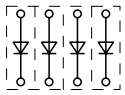

Open diode gates can be created using the following terminal blocks:
2002-1211/1000-410 or 2002-1211/1000-411

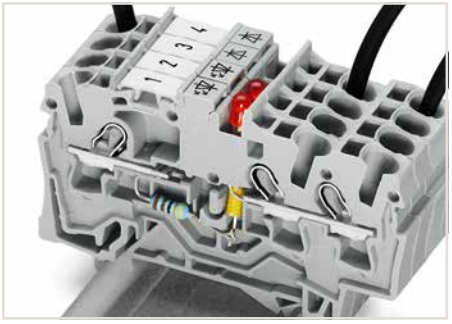

Designing monitoring units via LED terminal blocks (e.g., for control and operating circuits).

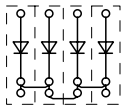

Polarized diode gates with a common cathode can be created using the following terminal blocks:
2002-1311/1000-410 or 2002-1311/1000-411

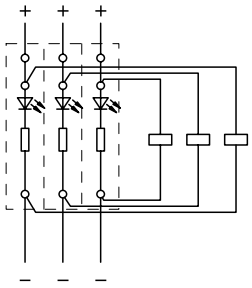

Circuit-related voltage indications can be created using the following terminal blocks:
2002-1321/1000-434 or 2002-1321/1000-413

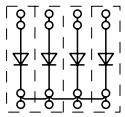

Polarized diode gates with a common cathode can be created using the following terminal blocks:
2002-1411/1000-410 or 2002-1411/1000-411

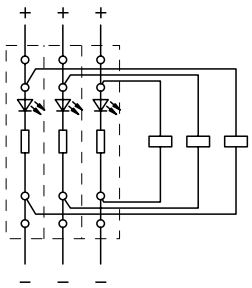

Circuit-related voltage indications can be created using the following terminal blocks:
2002-1421/1000-434 or 2002-1421/1000-413

❶ Conductor range: 0.25 ... 4 mm² "s + f-st"; Push-in termination: 0.75 ... 4 mm² "s" and 0.75 ... 2.5 mm² "insulated ferrules, 12 mm"

2002 Series Accessories

Appropriate marking system (see Section 13)

Insulation stop, 5 pcs/strip, 0.25 ... 0.5 mm²			
	light gray	**2002-171**	200 (8x25)
Insulation stop, 5 pcs/strip, 0.75 ... 1 mm²			
	dark gray	**2002-172**	200 (8x25)
Push-in type jumper bar, insulated, I_N 25 A, light gray			
	2-way	**2002-402**	200 (8x25)
	3-way	**2002-403**	200 (8x25)
	4-way	**2002-404**	200 (8x25)
	5-way	**2002-405**	100 (4x25)
	6-way	**2002-406**	100 (4x25)
	7-way	**2002-407**	100 (4x25)
	8-way	**2002-408**	100 (4x25)
	9-way	**2002-409**	100 (4x25)
	10-way	**2002-410**	100 (4x25)
Push-in type jumper bar, insulated, I_N 25 A, light gray			
	from 1 to 3	**2002-433**	200 (8x25)
	from 1 to 4	**2002-434**	200 (8x25)
	from 1 to 5	**2002-435**	100 (4x25)
	from 1 to 6	**2002-436**	100 (4x25)
	from 1 to 7	**2002-437**	100 (4x25)
	from 1 to 8	**2002-438**	100 (4x25)
	from 1 to 9	**2002-439**	100 (4x25)
	from 1 to 10	**2002-440**	100 (4x25)

TOPJOB® S
Diode Terminal Blocks
4 (6) mm², 2004 Series

1

0.5 … 4 (6) mm² ❶ | 20 … 10 AWG **U_N 250 V, U_{RM} 1000 V** **1N5408 - 1.5 A continuous current** **Terminal block width 6.2 mm / 0.244 inch** **11 … 13 mm / 0.43 … 0.51 inch**	**0.5 … 4 (6) mm² ❶ | 20 … 10 AWG** **U_N 250 V, U_{RM} 1000 V** **1N5408 - 1.5 A continuous current** **Terminal block width 6.2 mm / 0.244 inch** **11 … 13 mm / 0.43 … 0.51 inch**

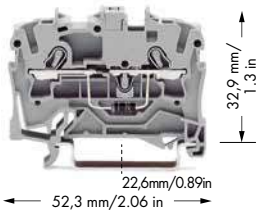

2004-1211/1000-401 2004-1211/1000-400

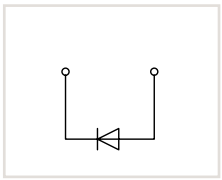

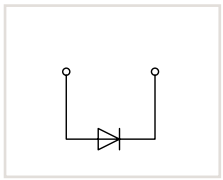

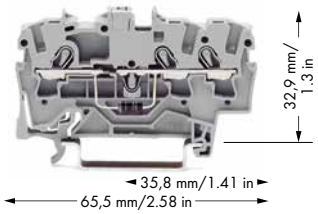

2004-1311/1000-401 2004-1311/1000-400

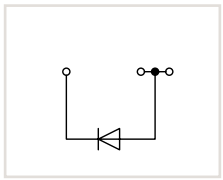

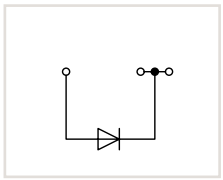

	Item No.	Pack. Unit
2-conductor diode terminal block, with 1N5408 diode		
gray	**2004-1211/1000-401**	50
gray	**2004-1211/1000-400**	50

	Item No.	Pack. Unit
3-conductor diode terminal block, with 1N5408 diode		
gray	**2004-1311/1000-401**	50
gray	**2004-1311/1000-400**	50

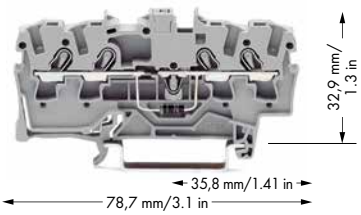

2004-1411/1000-401 2004-1411/1000-401

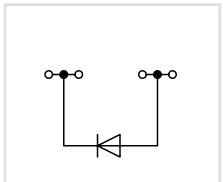

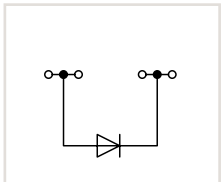

	Item No.	Pack. Unit
Through terminal blocks with same profile, see page 36	4-conductor diode terminal block, with 1N5408 diode	
gray	**2004-1411/1000-401**	50
gray	**2004-1411/1000-400**	50

TOPJOB® S
Diode Terminal Blocks
Circuit Configuration Examples

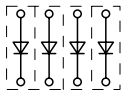

Open diode gates can be created using the following terminal blocks:
2004-1211/1000-400 or 2004-1211/1000-401



These diode terminal blocks have been specially developed for custom diode circuits, such as lamp test and collective fault signal circuits.

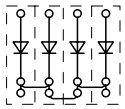

Open diode gates can be created using the following terminal blocks:
2004-1311/1000-400 or 2004-1311/1000-401

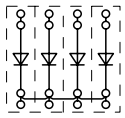

Open diode gates can be created using the following terminal blocks:
2004-1411/1000-400 or 2004-1411/1000-401

❶ Conductor range: 0.5 ... 6 mm² "s + f-st"; Push-in termination: 1 ... 6 mm² "s" and 0.75 ... 2.5 mm² "insulated ferrule, 12 mm"

2004 Series Accessories

Appropriate marking system (see Section 13)

Insulation stop, 5 pcs/strip, 0.25 ... 0.5 mm²			
	light gray	**2004-171**	200 (8x25)
Insulation stop, 5 pcs/strip, 0.75 ... 1 mm²			
	dark gray	**2004-172**	200 (8x25)
Push-in type jumper bar, insulated, I_N 32 A, light gray			
	2-way	**2004-402**	200 (8x25)
	3-way	**2004-403**	200 (8x25)
	4-way	**2004-404**	100 (4x25)
	5-way	**2004-405**	100 (4x25)
	6-way	**2004-406**	100 (4x25)
	7-way	**2004-407**	100 (4x25)
	8-way	**2004-408**	100 (4x25)
	9-way	**2004-409**	100 (4x25)
	10-way	**2004-410**	100 (4x25)
Push-in type jumper bar, insulated, I_N 32 A, light gray			
	from 1 to 3	**2004-433**	200 (8x25)
	from 1 to 4	**2004-434**	200 (8x25)
	from 1 to 5	**2004-435**	100 (4x25)
	from 1 to 6	**2004-436**	100 (4x25)
	from 1 to 7	**2004-437**	100 (4x25)
	from 1 to 8	**2004-438**	100 (4x25)
	from 1 to 9	**2004-439**	100 (4x25)
	from 1 to 10	**2004-440**	100 (4x25)
Wire commoning chain, 50 connections, insulated, I_N 8 A			
	black	**210-103**	1
Wire commoning chain, 50 connections, insulated, I_N 8 A			
	blue	**210-123**	1

TOPJOB® S
Double-Deck Diode Terminal Blocks and LED Terminal Blocks
2.5 (4) mm², 2002 Series

1

0.25 … 2.5 (4) mm² ❶ | 22 … 12 AWG **U_N 250 V, U_{RM} 1000 V** **1N4007 - 0.5 A continuous current** **Terminal block width 5.2 mm / 0.205 inch** **10 … 12 mm / 0.39 … 0.47 inch**	**0.25 … 2.5 (4) mm² ❶ | 22 … 12 AWG** **U_N 250 V, U_{RM} 1000 V** **1N4007 - 0.5 A continuous current** **Terminal block width 5.2 mm / 0.205 inch** **10 … 12 mm / 0.39 … 0.47 inch**	**0.25 … 2.5 (4) mm² ❶ | 22 … 12 AWG** **24 VDC** **I_F 0.025 A max.** **Terminal block width 5.2 mm / 0.205 inch** **10 … 12 mm / 0.39 … 0.47 inch**

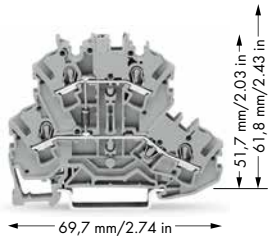

2002-2211/1000-410 2002-2211/1000-411

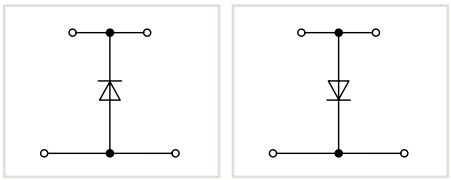

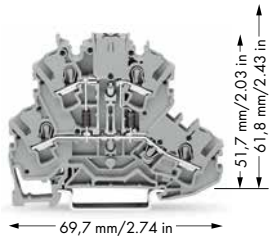

2002-2213/1000-487 2002-2213/1000-488

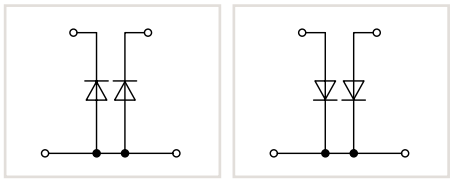

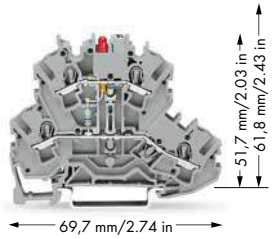

2002-2221/1000-434 2002-2221/1000-413

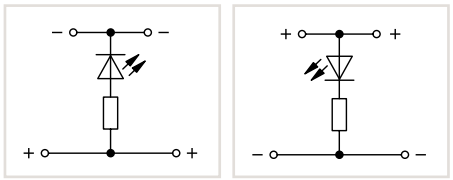

Item No.		Pack. Unit
Double-deck diode terminal block, with 1N4007 diode		
gray	**2002-2211/1000-410**	50
gray	**2002-2211/1000-411**	50

Item No.		Pack. Unit
Double-deck diode terminal block, with two 1N4007 diodes		
gray	**2002-2213/1000-487**	50
gray	**2002-2213/1000-488**	50

Item No.		Pack. Unit
Double-deck LED terminal block, with red LED		
gray	**2002-2221/1000-434**	50
gray	**2002-2221/1000-413**	50

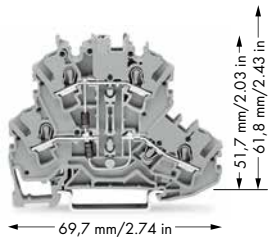

2002-2214/1000-492 2002-2214/1000-491

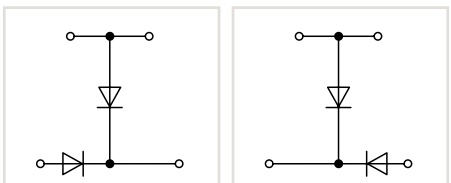

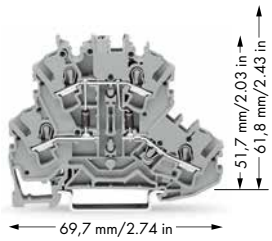

2002-2214/1000-489 2002-2214/1000-490

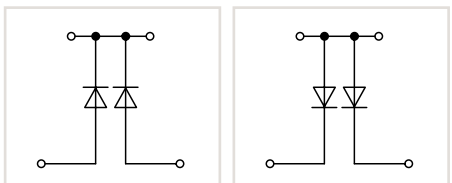

Item No.		Pack. Unit
Double-deck diode terminal block, with two 1N4007 diodes		
gray	**2002-2214/1000-492**	50
gray	**2002-2214/1000-491**	50

Item No.		Pack. Unit
Double-deck diode terminal block, with two 1N4007 diodes		
gray	**2002-2214/1000-489**	50
gray	**2002-2214/1000-490**	50

Through terminal blocks with same profile, see page 46

TOPJOB® S
Double-Deck Diode Terminal Blocks and LED Terminal Blocks
Circuit Configuration Examples

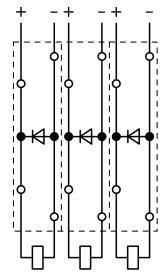

Recovery diodes can be created using the following terminal blocks:
2002-2211/1000-410 or 2002-2211/1000-411

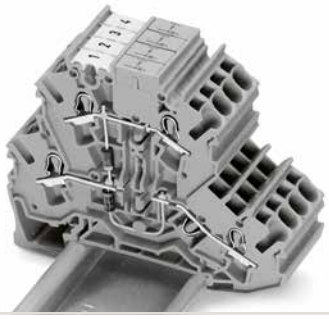

Double-deck diode terminal blocks were specifically developed for custom diode circuits, such as lamp test and collective fault signal circuits.
These terminal blocks provide high-density wiring in a width of just 5.2 mm.
Push-in type jumper bars provide additional options for custom circuit design.

❶ Conductor range: 0.25 … 4 mm² "s + f-st"; Push-in termination: 0.75 … 4 mm² "s" and 0.75 … 2.5 mm² "insulated ferrules, 12 mm"

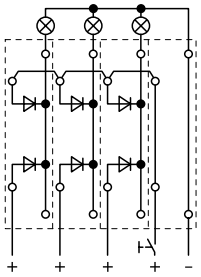

Lamp test circuits can be created using the following terminal blocks:
2002-2213/1000-487 or 2002-2213/1000-488

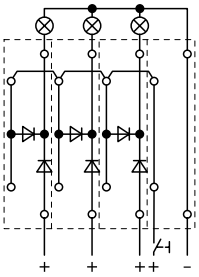

Lamp test circuits can be created using the following terminal blocks:
2002-2214/1000-492 or 2002-2214/1000-491

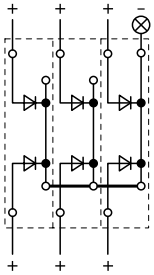

Collective fault signals can be created using the following terminal blocks:
2002-2214/1000-489 or 2002-2214/1000-490

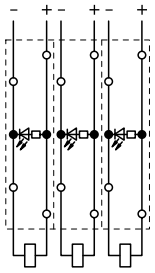

Circuit-related voltage indications can be created using the following terminal blocks:
2002-2221/1000-434 or 2002-2221/1000-413

2002 Series Accessories

Appropriate marking system (see Section 13)

End and intermediate plate, 0.8 mm thick			
	orange	**2002-2292**	100 (4x25)
	gray	**2002-2291**	100 (4x25)
Double-deck marker carrier, pivoting			
	gray	**2002-121**	50 (2x25)
Insulation stop, 5 pcs/strip, 0.25 … 0.5 mm²			
	light gray	**2002-171**	200 (8x25)
Insulation stop, 5 pcs/strip, 0.75 … 1 mm²			
	dark gray	**2002-172**	200 (8x25)
Push-in type jumper bar, insulated, I_N 25 A, light gray			
	2-way	**2002-402**	200 (8x25)
	3-way	**2002-403**	200 (8x25)
	4-way	**2002-404**	200 (8x25)
	5-way	**2002-405**	100 (4x25)
	6-way	**2002-406**	100 (4x25)
	7-way	**2002-407**	100 (4x25)
	8-way	**2002-408**	100 (4x25)
	9-way	**2002-409**	100 (4x25)
	10-way	**2002-410**	100 (4x25)
Push-in type jumper bar, insulated, I_N 25 A, light gray			
	from 1 to 3	**2002-433**	200 (8x25)
	from 1 to 4	**2002-434**	200 (8x25)
	from 1 to 5	**2002-435**	100 (4x25)
	from 1 to 6	**2002-436**	100 (4x25)
	from 1 to 7	**2002-437**	100 (4x25)
	from 1 to 8	**2002-438**	100 (4x25)
	from 1 to 9	**2002-439**	100 (4x25)
	from 1 to 10	**2002-440**	100 (4x25)

TOPJOB® S
Trible-Deck Diode Terminal Blocks and LED Terminal Blocks
2.5 (4) mm², 2002 Series

1

0.25 … 2.5 (4) mm² ❶ | 22 … 12 AWG U_N 250 V, U_{RM} 1000 V 1N4007 - 0.5 A continuous current Terminal block width 5.2 mm / 0.205 inch 10 … 12 mm / 0.39 … 0.47 inch	0.25 … 2.5 (4) mm² ❶ | 22 … 12 AWG U_N 250 V, U_{RM} 1000 V 1N4007 - 0.5 A continuous current Terminal block width 5.2 mm / 0.205 inch 10 … 12 mm / 0.39 … 0.47 inch	0.25 … 2.5 (4) mm² ❶ | 22 … 12 AWG 24 VDC I_F 0.025 A max. Terminal block width 5.2 mm / 0.205 inch 10 … 12 mm / 0.39 … 0.47 inch

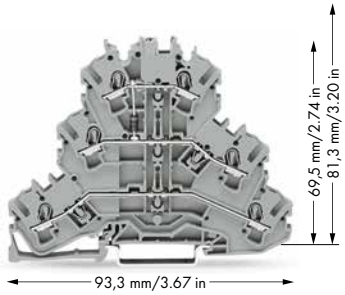

2002-3211/1000-410 2002-3211/1000-411

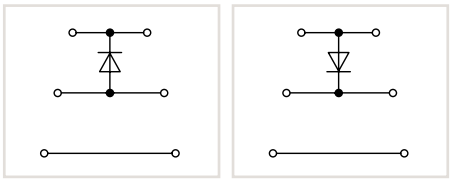

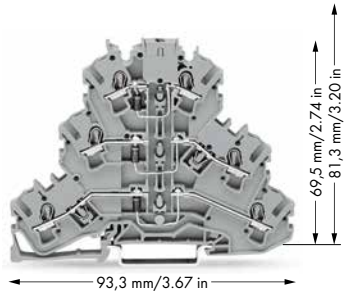

2002-3212/1000-673 2002-3212/1000-674

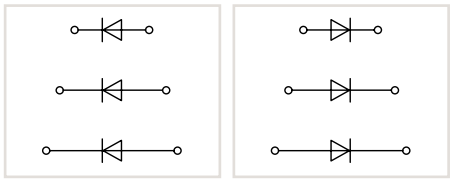

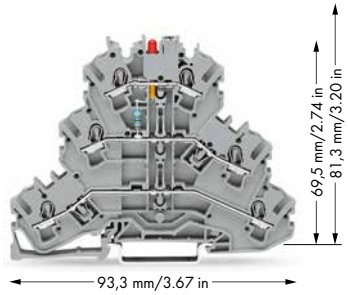

2002-3221/1000-434 2002-3221/1000-413

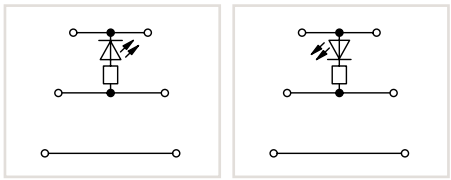

Item No.		Pack. Unit
Triple-deck diode terminal block, with 1N4007 diode		
gray	**2002-3211/1000-410**	50
gray	**2002-3211/1000-411**	50

Item No.		Pack. Unit
Triple-deck diode terminal block, with three 1N4007 diodes		
gray	**2002-3212/1000-673**	50
gray	**2002-3212/1000-674**	50

Item No.		Pack. Unit
Triple-deck LED terminal block, with red LED		
gray	**2002-3221/1000-434**	50
gray	**2002-3221/1000-413**	50

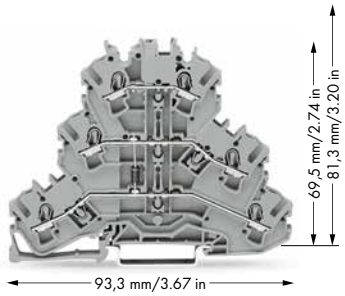

2002-3211/1000-675 2002-3211/1000-676

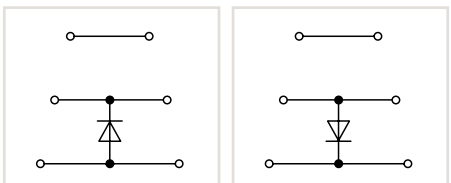

Item No.		Pack. Unit
Triple-deck diode terminal block, with 1N4007 diode		
gray	**2002-3211/1000-675**	50
gray	**2002-3211/1000-676**	50

Through terminal blocks with same profile,
see page 58

Overview of certification organizations, see page 654

PUSH-IN CAGE CLAMP®

TOPJOB® S
Triple-Deck Diode Terminal Blocks
Circuit Configuration Examples

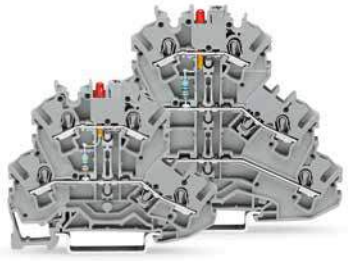

Double- and triple-deck LED terminal blocks
Designing monitoring units via LED terminal blocks (e.g., for control and operating circuits).

❶ Conductor range: 0.25 ... 4 mm² "s + f-st"; Push-in termination: 0.75 ... 4 mm² "s" and 0.75 ... 2.5 mm² "insulated ferrules, 12 mm"

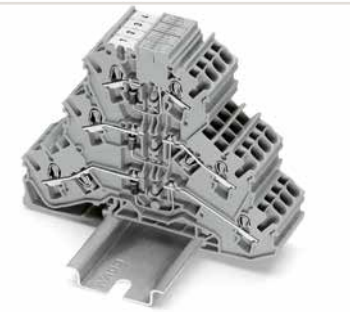

Triple-deck diode terminal blocks were specifically developed for custom diode circuits, such as lamp test and collective fault signal circuits.
These terminal blocks provide high-density wiring in a width of just 5.2 mm.
Push-in type jumper bars provide additional options for custom circuit design.

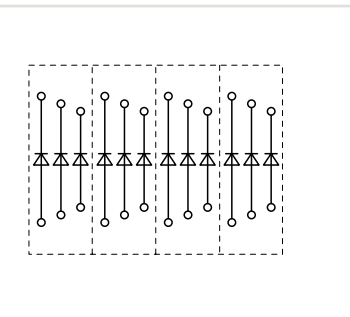

Open diode gates can be created and connected individually using the following terminal blocks:
2002-3212/1000-673 or 2002-3212/1000-674

Using push-in type jumper bars, individual levels can be turned into polarized diode gates.

2002 Series Accessories

Appropriate marking systems: WMB/WMB Inline/Marking strips (see Section 13)

End and intermediate plate, 0.8 mm thick

orange	**2002-3292**	100	(4x25)
gray	**2002-3291**	100	(4x25)

Triple-deck marker carrier, pivoting

gray	**2002-131**	50	(2x25)

Insulation stop, 5 pcs/strip, 0.25 ... 0.5 mm²

light gray	**2002-171**	200	(8x25)

Insulation stop, 5 pcs/strip, 0.75 ... 1 mm²

dark gray	**2002-172**	200	(8x25)

Push-in type jumper bar, insulated, I_N 25 A, light gray

2-way	**2002-402**	200	(8x25)
3-way	**2002-403**	200	(8x25)
4-way	**2002-404**	200	(8x25)
5-way	**2002-405**	100	(4x25)
6-way	**2002-406**	100	(4x25)
7-way	**2002-407**	100	(4x25)
8-way	**2002-408**	100	(4x25)
9-way	**2002-409**	100	(4x25)
10-way	**2002-410**	100	(4x25)

Push-in type jumper bar, insulated, I_N 25 A, light gray

from 1 to 3	**2002-433**	200	(8x25)
from 1 to 4	**2002-434**	200	(8x25)
from 1 to 5	**2002-435**	100	(4x25)
from 1 to 6	**2002-436**	100	(4x25)
from 1 to 7	**2002-437**	100	(4x25)
from 1 to 8	**2002-438**	100	(4x25)
from 1 to 9	**2002-439**	100	(4x25)
from 1 to 10	**2002-440**	100	(4x25)

Modular TOPJOB® S connector, snaps together, for jumper contact slot

gray	**2002-511**	100	(4x25)

Spacer module, snaps together, bridges commoned terminal blocks

gray	**2002-549**	100	(4x25)

End plate, for modular TOPJOB® S connector, 1.5 mm thick

gray	**2002-541**	100	(4x25)

Test plug, with 500 mm cable, 2 mm Ø, max. 42 V

red	**210-136**	50	

Test plug adapter, for 4 mm Ø test plug

gray	**2009-174**	100	(4x25)

Testing tap, for max. 2.5 mm²

gray	**2009-182**	100	(4x25)

Banana plug, for 4 mm socket diameter, color mixed, 10 x orange, white, black, blue, yellow

	215-111	50	

WMB Multi marking system, white, 10 strips with 10 markers per card, 5 ... 5.2 mm stretchable

plain	**793-5501**	5	

WMB Inline, plain, 1,500 WMB markers (5 mm) per reel, 5 ... 5.2 mm stretchable

white	**2009-115**	1	

Marking strip, plain, 11 mm wide, 50 m reel

white	**2009-110**	1	

TOPJOB® S group marker carrier, snap-on type for jumper slot, 5 mm wide

gray	**2009-191**	50	(2x25)

Screwless end stop, for DIN-35 rail, 6 mm wide

gray	**249-116**	100	(4x25)

Screwless end stop, for DIN-35 rail, 10 mm wide

gray	**249-117**	50	(2x25)

PUSH-IN CAGE CLAMP®

TOPJOB® S
Pluggable Diode Modules on Carrier Terminal Blocks, 2.5 (4) mm²
2002 Series

1

Diode module
with 1N4007 diode
U_N 250 V, U_{RM} 1000 V
I_N 1 A
Plug width 5.2 mm / 0.205 inch



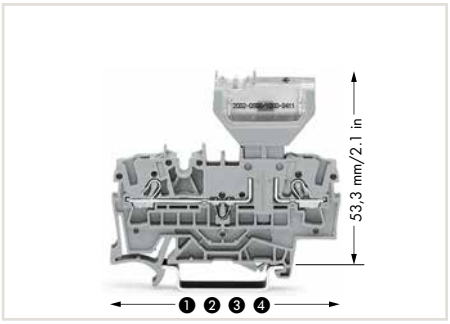

Dimensions of carrier terminal blocks with a pluggable diode module:
1 66.1 mm / 2.62 inch for 2002-1661
2 76.8 mm / 3.02 inch for 2002-1761
3 87.5 mm / 3.45 inch for 2002-1861
4 72.9 mm / 2.87 inch for 2002-1961

5 See application notes for:
Push-in type wire jumper, page 138
Colored push-in type jumper bar, page 134
Staggered jumper, page 136

2002-800/1000-411 2002-800/1000-410

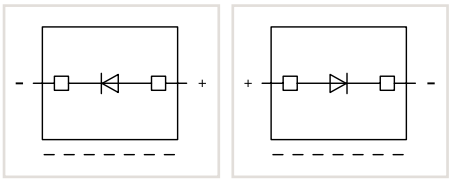

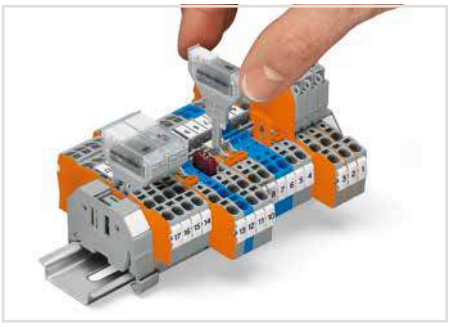

These diode modules are ideal for custom diode circuits (e.g., lamp test and collective fault signal circuits) and offer the following advantages:
- Separation into functional and wiring levels
- Polarized switching direction
- Quick and easy exchange of modules
- Terminal blocks/modules provide high-density wiring in a width of just 5.2 mm

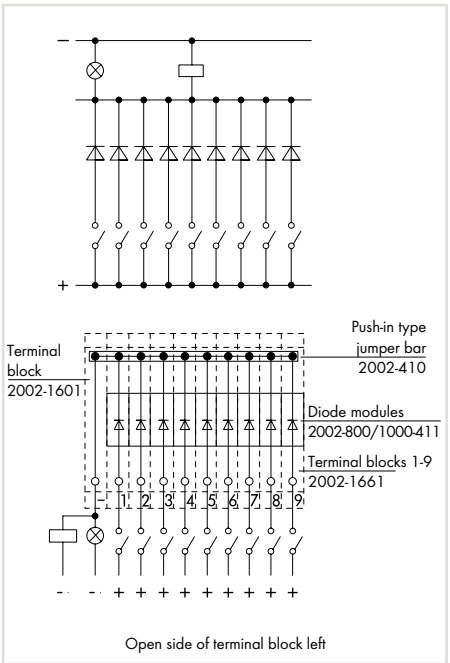

Diode module (2002-800/1000-411)
Diode gate for collective fault indication

	Item No.	Pack. Unit
Diode module, with 1N4007 diode, max. operating temperature: 85 °C, 5.2 mm wide		
gray	**2002-800/1000-411**	100
gray	**2002-800/1000-410**	100

Carrier Term. Blocks and Accessories

Appropriate marking system:
WMB/Marking strips

2-conductor carrier terminal block,			
1	0.25 ... 2.5 (4) mm² / 22 ... 12 AWG		
	Terminal block width 5.2 mm / 0.205 inch		
	gray	**2002-1661**	50
End and intermediate plate, 1 mm thick			
	orange	**2002-1692**	100 (4x25)
	gray	**2002-1691**	100 (4x25)
3-conductor carrier terminal block,			
2	0.25 ... 2.5 (4) mm² / 22 ... 12 AWG		
	Terminal block width 5.2 mm / 0.205 inch		
	gray	**2002-1761**	50
End and intermediate plate, 1 mm thick			
	orange	**2002-1792**	100 (4x25)
	gray	**2002-1791**	100 (4x25)
4-conductor carrier terminal block,			
3	0.25 ... 2.5 (4) mm² /22 ... 12 AWG		
	Terminal block width 5.2 mm / 0.205 inch		
	gray	**2002-1861**	50
End and intermediate plate, 1 mm thick			
	orange	**2002-1892**	100 (4x25)
	gray	**2002-1891**	100 (4x25)
2-conductor carrier terminal block,			
4	0.25 ... 2.5 (4) mm² / 22 ... 12 AWG		
	Terminal block width 5.2 mm / 0.205 inch		
	gray	**2002-1961**	50
End and intermediate plate, 1 mm thick			
	orange	**2002-1992**	100 (4x25)
	gray	**2002-1991**	100 (4x25)

Accessories

Push-in type wire jumper, insulated, wire size 1.5 mm², 5	I_N 18 A		
	L = 60 mm	**2009-412**	100 (10x10)
	L = 110 mm	**2009-414**	100 (10x10)
	L = 250 mm	**2009-416**	100 (10x10)
Push-in type jumper bar, insulated, I_N 25 A, light gray 5			
	2-way	**2002-402**	200 (8x25)
	3-way	**2002-403**	200 (8x25)
	4-way	**2002-404**	200 (8x25)
	5-way	**2002-405**	100 (4x25)
	6-way	**2002-406**	100 (4x25)
	7-way	**2002-407**	100 (4x25)
	8-way	**2002-408**	100 (4x25)
	9-way	**2002-409**	100 (4x25)
	10-way	**2002-410**	100 (4x25)
Push-in type jumper bar, insulated, I_N 25 A, light gray			
	from 1 to 3	**2002-433**	200 (8x25)
	from 1 to 4	**2002-434**	200 (8x25)
	from 1 to 5	**2002-435**	100 (4x25)
	from 1 to 6	**2002-436**	100 (4x25)
	from 1 to 7	**2002-437**	100 (4x25)
	from 1 to 8	**2002-438**	100 (4x25)
	from 1 to 9	**2002-439**	100 (4x25)
	from 1 to 10	**2002-440**	100 (4x25)
Staggered jumper, insulated, I_N 25 A, light gray 5			
	2-way	**2002-472**	100 (4x25)
	3-way	**2002-473**	100 (4x25)
	4-way	**2002-474**	100 (4x25)
	5-way	**2002-475**	50 (2x25)
	6-way	**2002-476**	50 (2x25)
	7-way	**2002-477**	50 (2x25)
	8-way	**2002-478**	50 (2x25)
	9-way	**2002-479**	50 (2x25)
	10-way	**2002-480**	50 (2x25)
	11-way	**2002-481**	50 (2x25)
	12-way	**2002-482**	50 (2x25)

PUSH-IN CAGE CLAMP®

TOPJOB® S – Pluggable Diode Modules and Empty Component Plug Housings on Through Terminal Blocks, 2.5 (4) mm²

2002 Series

Diode module
with 1N4007 diode as free-wheeling diode
U_N 250 V, U_{RM} 1000 V
I_N 1 A
Plug width 10.4 mm / 0.409 inch



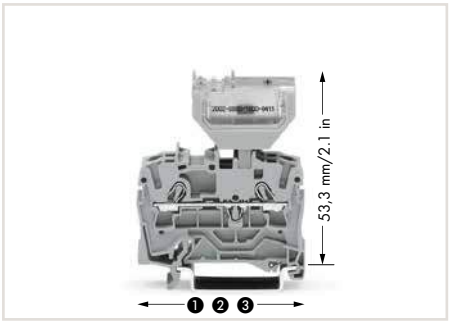

Dimensions of through terminal blocks with a plug-gable diode module:
1 48.5 mm / 1.91 inch for 2002-1201
2 59.2 mm / 2.33 inch for 2002-1301
3 69.9 mm / 2.75 inch for 2002-1401

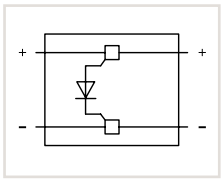

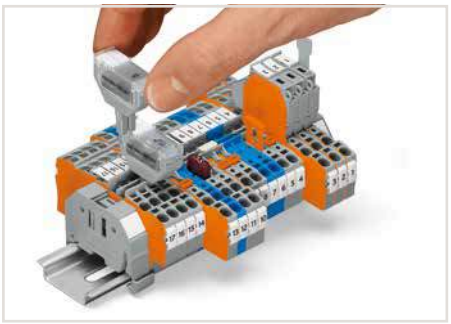

Similar to push-in type jumpers, these diode modules are simply pushed into the current bar's contact slots of two adjacent through terminal blocks, providing the following advantages:
- Compatible with all 2001 to 2006 Series Through Terminal Blocks equipped with jumper slots (note the module's width)
- Easily retrofit existing systems

Additional advantages:
- Separation into functional and wiring levels
- Fast replacement of other functional units
- Solder-free assembly of diodes, resistors, etc.



Opening the cover via operating tool (2.5 mm blade).

	Item No.	Pack. Unit
Diode module, with 1N4007 diode as free-wheeling diode, max. operating temperature: 85 °C, 10.4 mm wide		
gray	**2002-880/1000-411**	50
Empty component plug housing type 4, 2-pole, 10.4 mm wide		
gray	**2002-880**	50

Through Term. Blocks and Accessories

Appropriate marking system:
WMB/Marking strips

2-conductor through terminal block, 0.25 ... 2.5 (4) mm² / 22 ... 12 AWG, Terminal block width 5.2 mm / 0.205 inch			
1	gray	**2002-1201**	100
End and intermediate plate, 0.8 mm thick	orange	**2002-1292**	100 (4x25)
	gray	**2002-1291**	100 (4x25)
3-conductor through terminal block, 0.25 ... 2.5 (4) mm² / 22 ... 12 AWG, Terminal block width 5.2 mm / 0.205 inch			
2	gray	**2002-1301**	100
End and intermediate plate, 0.8 mm thick	orange	**2002-1392**	100 (4x25)
	gray	**2002-1391**	100 (4x25)
4-conductor through terminal block, 0.25 ... 2.5 (4) mm² / 22 ... 12 AWG, Terminal block width 5.2 mm / 0.205 inch			
3	gray	**2002-1401**	100
End and intermediate plate, 0.8 mm thick	orange	**2002-1492**	100 (4x25)
	gray	**2002-1491**	100 (4x25)
Insulation stop, 5 pcs/strip, 0.25 ... 0.5 mm²			
	light gray	**2002-171**	200 (8x25)

4 See application notes for:
Push-in type wire jumper, page 138
Colored push-in type jumper bar, page 134
Staggered jumper, page 136

Accessories

Insulation stop, 5 pcs/strip, 0.75 ... 1 mm²			
	dark gray	**2002-172**	200 (8x25)
Protective warning marker, with black high-voltage symbol, for 5 terminal blocks			
	yellow	**2002-115**	100 (4x25)
Push-in type wire jumper, insulated, wire size 1.5 mm², 4	I_N 18 A		
	L = 60 mm	**2009-412**	100 (10x10)
	L = 110 mm	**2009-414**	100 (10x10)
	L = 250 mm	**2009-416**	100 (10x10)
Push-in type jumper bar, insulated, I_N 25 A, light gray 4			
	2-way	**2002-402**	200 (8x25)
	3-way	**2002-403**	200 (8x25)
	4-way	**2002-404**	200 (8x25)
	5-way	**2002-405**	100 (4x25)
	6-way	**2002-406**	100 (4x25)
	7-way	**2002-407**	100 (4x25)
	8-way	**2002-408**	100 (4x25)
	9-way	**2002-409**	100 (4x25)
	10-way	**2002-410**	100 (4x25)
Push-in type jumper bar, insulated, I_N 25 A, light gray			
	from 1 to 3	**2002-433**	200 (8x25)
	from 1 to 4	**2002-434**	200 (8x25)
	from 1 to 5	**2002-435**	100 (4x25)
	from 1 to 6	**2002-436**	100 (4x25)
	from 1 to 7	**2002-437**	100 (4x25)
	from 1 to 8	**2002-438**	100 (4x25)
	from 1 to 9	**2002-439**	100 (4x25)
	from 1 to 10	**2002-440**	100 (4x25)
Staggered jumper, insulated, I_N 25 A, light gray 4			
	2-way	**2002-472**	100 (4x25)
	3-way	**2002-473**	100 (4x25)
	4-way	**2002-474**	100 (4x25)
	5-way	**2002-475**	50 (2x25)

TOPJOB® S
Pluggable LED Modules on Carrier Terminal Blocks, 2.5 (4) mm²
2002 Series

1

LED module
$I_N \leq 3$ mA

Plug width 5.2 mm / 0.205 inch



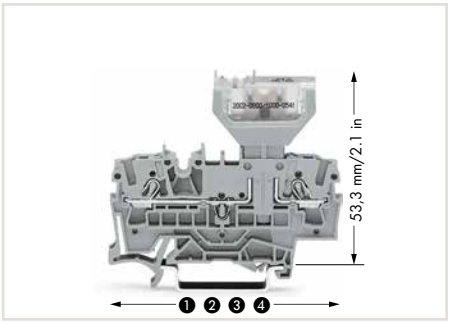

Dimensions of carrier terminal blocks with a pluggable LED module:
1 66.1 mm / 2.62 inch for 2002-1661
2 76.8 mm / 3.02 inch for 2002-1761
3 87.5 mm / 3.45 inch for 2002-1861
4 72.9 mm / 2.87 inch for 2002-1961

5 See application notes for:
Push-in type wire jumper, page 138
Colored push-in type jumper bar, page 134
Staggered jumper, page 136

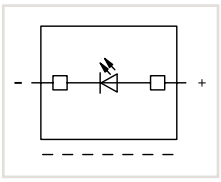

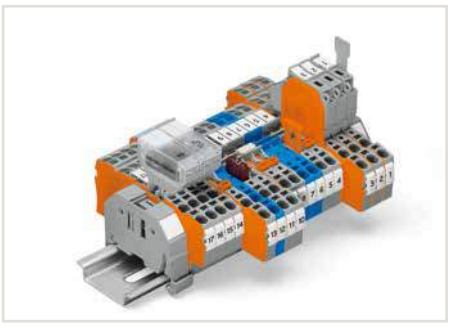

The monitoring of control and operating current circuits with LED modules on rail-mount terminal blocks provides several advantages:
- No additional cost for assembly and wiring
- Separation into functional and wiring levels
- Fast and easy replacement of other functional units

Additional advantages:
- Polarized switching direction
- Terminal blocks/modules provide high-density wiring in a width of just 5.2 mm

	Item No.	Pack. Unit
LED module, with red LED, max. operating temperature: 85 °C, 5.2 mm wide		
◯ 12 ... 30 V	**2002-800/1000-541**	100
◯ 30 ... 65 V	**2002-800/1000-542**	100
◯ 230 V	**2002-800/1000-836**	100

Carrier Term. Blocks and Accessories

Appropriate marking system:
WMB/Marking strips

2-conductor carrier terminal block,			
1	0.25 ... 2.5 (4) mm² / 22 ... 12 AWG		
	Terminal block width 5.2 mm / 0.205 inch		
	gray	**2002-1661**	50
End and intermediate plate, 1 mm thick			
	orange	**2002-1692**	100 (4x25)
	gray	**2002-1691**	100 (4x25)
32-conductor carrier terminal block,			
2	0.25 ... 2.5 (4) mm² / 22 ... 12 AWG		
	Terminal block width 5.2 mm / 0.205 inch		
	gray	**2002-1761**	50
End and intermediate plate, 1 mm thick			
	orange	**2002-1792**	100 (4x25)
	gray	**2002-1791**	100 (4x25)
4-conductor carrier terminal block,			
3	0.25 ... 2.5 (4) mm² / 22 ... 12 AWG		
	Terminal block width 5.2 mm / 0.205 inch		
	gray	**2002-1861**	50
End and intermediate plate, 1 mm thick			
	orange	**2002-1892**	100 (4x25)
	gray	**2002-1891**	100 (4x25)
2-conductor carrier terminal block,			
4	0.25 ... 2.5 (4) mm² / 22 ... 12 AWG		
	Terminal block width 5.2 mm / 0.205 inch		
	gray	**2002-1961**	50
End and intermediate plate, 1 mm thick			
	orange	**2002-1992**	100 (4x25)
	gray	**2002-1991**	100 (4x25)

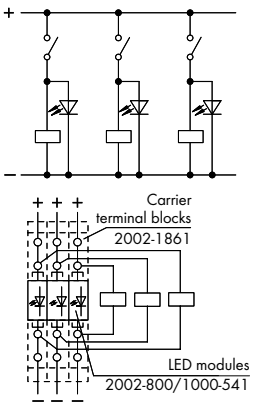

Open side of terminal block right

LED module (2002-800/1000-541)
Voltage control refers to current circuits.

Accessories

Push-in type wire jumper, insulated, wire size 1.5 mm², 5	I_N 18 A		
	L = 60 mm	**2009-412**	100 (10x10)
	L = 110 mm	**2009-414**	100 (10x10)
	L = 250 mm	**2009-416**	100 (10x10)
Push-in type jumper bar, insulated, I_N 25 A, light gray 5			
	2-way	**2002-402**	200 (8x25)
	3-way	**2002-403**	200 (8x25)
	4-way	**2002-404**	200 (8x25)
	5-way	**2002-405**	100 (4x25)
	6-way	**2002-406**	100 (4x25)
	7-way	**2002-407**	100 (4x25)
	8-way	**2002-408**	100 (4x25)
	9-way	**2002-409**	100 (4x25)
	10-way	**2002-410**	100 (4x25)
Push-in type jumper bar, insulated, I_N 25 A, light gray			
	from 1 to 3	**2002-433**	200 (8x25)
	from 1 to 4	**2002-434**	200 (8x25)
	from 1 to 5	**2002-435**	100 (4x25)
	from 1 to 6	**2002-436**	100 (4x25)
	from 1 to 7	**2002-437**	100 (4x25)
	from 1 to 8	**2002-438**	100 (4x25)
	from 1 to 9	**2002-439**	100 (4x25)
	from 1 to 10	**2002-440**	100 (4x25)
Staggered jumper, insulated, I_N 25 A, light gray 5			
	2-way	**2002-472**	100 (4x25)
	3-way	**2002-473**	100 (4x25)
	4-way	**2002-474**	100 (4x25)
	5-way	**2002-475**	50 (2x25)
	6-way	**2002-476**	50 (2x25)
	7-way	**2002-477**	50 (2x25)
	8-way	**2002-478**	50 (2x25)
	9-way	**2002-479**	50 (2x25)
	10-way	**2002-480**	50 (2x25)
	11-way	**2002-481**	50 (2x25)
	12-way	**2002-482**	50 (2x25)

TOPJOB® S
Pluggable LED Modules on Through Terminal Blocks, 2.5 (4) mm²
2002 Series

LED module
I_N ≤ 3 mA

Plug width 10.4 mm / 0.409 inch





Dimensions of through terminal blocks with a pluggable LED module:
1 48.5 mm / 1.91 inch for 2002-1201
2 59.2 mm / 2.33 inch for 2002-1301
3 69.9 mm / 2.75 inch for 2002-1401

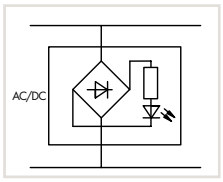



Labelling via WMB Multi markers and marking strips.



Testing can also be performed via 2-pole test plugs.

	Item No.	Pack. Unit
LED module, with red LED, max. operating temperature: 85 °C, 10.4 mm wide		
◯ 12 ... 30 V	**2002-880/1000-541**	50
◯ 30 ... 65 V	**2002-880/1000-542**	50
◯ 230 V	**2002-880/1000-836**	50

Through Term. Blocks and Accessories
Appropriate marking system:
WMB/Marking strips

2-conductor through terminal block,			
❶	0.25 ... 2.5 (4) mm² / 22 ... 12 AWG		
	Terminal block width 5.2 mm / 0.205 inch		
	gray	**2002-1201**	100
End and intermediate plate, 0.8 mm thick			
	orange	**2002-1292**	100 (4x25)
	gray	**2002-1291**	100 (4x25)
3-conductor through terminal block,			
❷	0.25 ... 2.5 (4) mm² / 22 ... 12 AWG		
	Terminal block width 5.2 mm / 0.205 inch		
	gray	**2002-1301**	100
End and intermediate plate, 0.8 mm thick			
	orange	**2002-1392**	100 (4x25)
	gray	**2002-1391**	100 (4x25)
4-conductor through terminal block,			
❸	0.25 ... 2.5 (4) mm² / 22 ... 12 AWG		
	Terminal block width 5.2 mm / 0.205 inch		
	gray	**2002-1401**	100
End and intermediate plate, 0.8 mm thick			
	orange	**2002-1492**	100 (4x25)
	gray	**2002-1491**	100 (4x25)
Insulation stop, 5 pcs/strip, 0.25 ... 0.5 mm²			
	light gray	**2002-171**	200 (8x25)
Insulation stop, 5 pcs/strip, 0.75 ... 1 mm²			
	dark gray	**2002-172**	200 (8x25)

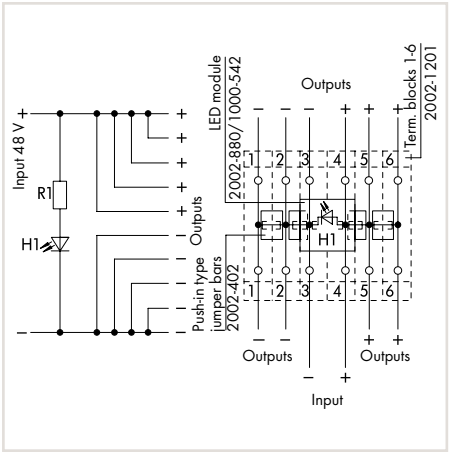

LED module (2002-880/1000-541)
Multiple outputs with indicator lamp

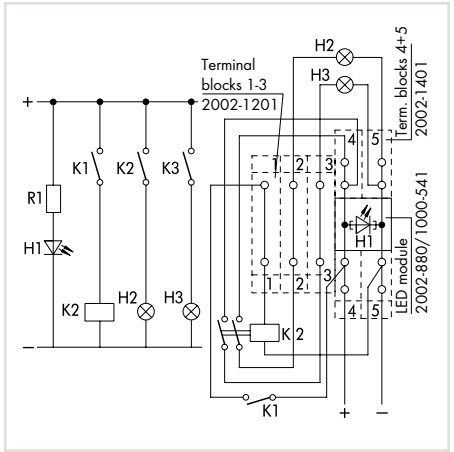

LED module (2002-880/1000-541)
Control unit

PUSH-IN CAGE CLAMP®

TOPJOB® S
Empty Component Plug Housings on Carrier Terminal Blocks, 2.5 (4) mm²
2002 Series

1

Empty component plug housing Plug width 5.2 mm / 0.205 inch	Empty component plug housing Plug width 10.4 mm / 0.409 inch





❺ See application notes for:
Push-in type wire jumper, page 138
Colored push-in type jumper bar, page 134
Staggered jumper, page 10

	Item No.	Pack. Unit
Empty component plug housing type 1, 2-pole, 5.2 mm wide		
gray	**2002-800**	100

	Item No.	Pack. Unit
Empty component plug housing type 2, 2-pole, 10.4 mm wide		
gray	**2002-810**	50
Empty component plug housing type 3, 4-pole, 10.4 mm wide		
gray	**2002-820**	50

Carrier Term. Blocks and Accessories

Appropriate marking system: WMB/Marking strips (see Section 13)

❶ 2-conductor carrier terminal block,
0.25 … 2.5 (4) mm² / 22 … 12 AWG
Terminal block width 5.2 mm / 0.205 inch



gray	**2002-1661**	50

End and intermediate plate, 1 mm thick



orange	**2002-1692**	100 (4x25)
gray	**2002-1691**	100 (4x25)

❷ 3-conductor carrier terminal block,
0.25 … 2.5 (4) mm² / 22 … 12 AWG
Terminal block width 5.2 mm / 0.205 inch



gray	**2002-1761**	50

End and intermediate plate, 1 mm thick



orange	**2002-1792**	100 (4x25)
gray	**2002-1791**	100 (4x25)

❸ 4-conductor carrier terminal block,
0.25 … 2.5 (4) mm² / 22 … 12 AWG
Terminal block width 5.2 mm / 0.205 inch



gray	**2002-1861**	50

End and intermediate plate, 1 mm thick



orange	**2002-1892**	100 (4x25)
gray	**2002-1891**	100 (4x25)

❹ 2-conductor carrier terminal block,
0.25 … 2.5 (4) mm² / 22 … 12 AWG
Terminal block width 5.2 mm / 0.205 inch



gray	**2002-1961**	50

End and intermediate plate, 1 mm thick



orange	**2002-1992**	100 (4x25)
gray	**2002-1991**	100 (4x25)

Protective warning marker, with black high-voltage symbol, for 5 terminal blocks



yellow	**2002-115**	100 (4x25)

Push-in type wire jumper, insulated, wire size 1.5 mm², I_N 18 A



L = 60 mm	**2009-412**	100 (10x10)
L = 110 mm	**2009-414**	100 (10x10)
L = 250 mm	**2009-416**	100 (10x10)

Push-in type jumper bar, insulated, I_N 25 A, light gray



2-way	**2002-402**	200 (8x25)
3-way	**2002-403**	200 (8x25)
4-way	**2002-404**	200 (8x25)
5-way	**2002-405**	100 (4x25)
6-way	**2002-406**	100 (4x25)
7-way	**2002-407**	100 (4x25)
8-way	**2002-408**	100 (4x25)
9-way	**2002-409**	100 (4x25)
10-way	**2002-410**	100 (4x25)

Push-in type jumper bar, insulated, I_N 25 A, light gray



from 1 to 3	**2002-433**	200 (8x25)
from 1 to 4	**2002-434**	200 (8x25)
from 1 to 5	**2002-435**	100 (4x25)
from 1 to 6	**2002-436**	100 (4x25)
from 1 to 7	**2002-437**	100 (4x25)
from 1 to 8	**2002-438**	100 (4x25)
from 1 to 9	**2002-439**	100 (4x25)
from 1 to 10	**2002-440**	100 (4x25)

Multi-purpose operating tool, for component plugs

	2002-116	5

Accessories

Staggered jumper, insulated, I_N 25 A, light gray

❺



2-way	**2002-472**	100 (4x25)
3-way	**2002-473**	100 (4x25)
4-way	**2002-474**	100 (4x25)
5-way	**2002-475**	50 (2x25)
6-way	**2002-476**	50 (2x25)
7-way	**2002-477**	50 (2x25)
8-way	**2002-478**	50 (2x25)
9-way	**2002-479**	50 (2x25)
10-way	**2002-480**	50 (2x25)
11-way	**2002-481**	50 (2x25)
12-way	**2002-482**	50 (2x25)

WMB Multi marking system, white, 10 strips with 10 markers per card, 5 … 5.2 mm stretchable

plain	**793-5501**	5

WMB Multi marking system, plain, 10 strips with 10 markers per card, 5 … 5.2 mm stretchable



yellow	**793-5501/000-002**	
red	**793-5501/000-005**	
blue	**793-5501/000-006**	
gray	**793-5501/000-007**	
orange	**793-5501/000-012**	
light green	**793-5501/000-017**	
green	**793-5501/000-023**	
violet	**793-5501/000-024**	
		5

Overview of certification organizations, see page 654

Technical Information

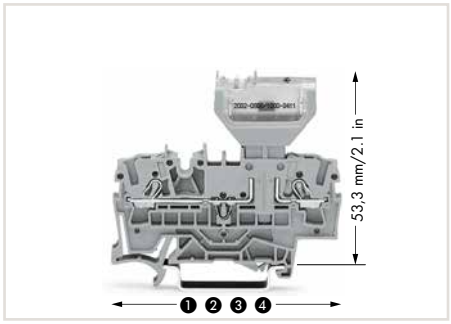

Dimensions of carrier terminal blocks with a pluggable diode module:
1 66.1 mm / 2.62 inch for 2002-1661
2 76.8 mm / 3.02 inch for 2002-1761
3 87.5 mm / 3.45 inch for 2002-1861
4 72.9 mm / 2.87 inch for 2002-1961

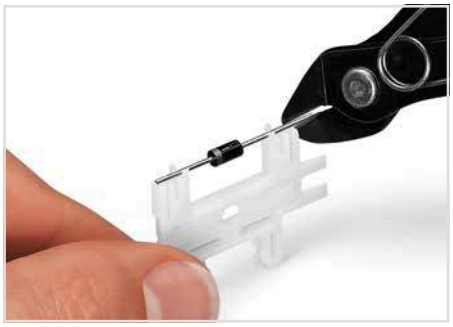

Cutting component to the proper length.



Pressing component into plug contact via operating tool.

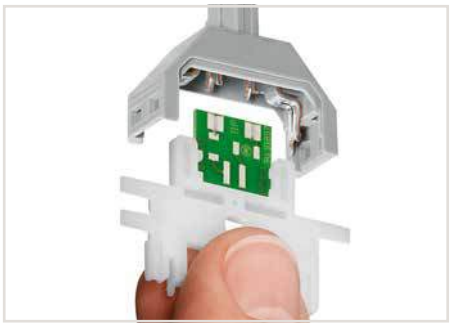

Pushing PCB into plug contact via operating tool.

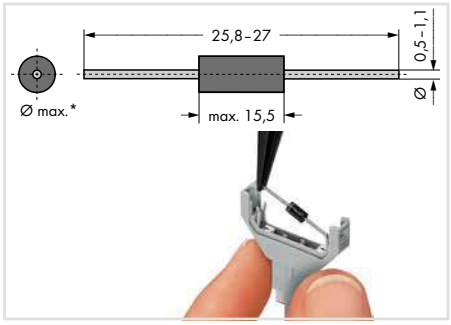

*max. 3.4 mm Ø at 5.2 mm module width and
*max. 5.4 mm Ø at 10.4 mm module width
Notice: Reconnection only possible with similar or larger wire diameter.
Solder-free assembly of diodes, resistors, etc.
Illustration shows a 1N4007 diode.



Component plugs for building custom circuits – solder-free assembly of diodes, resistors, etc.
Illustration shows a 1N4007 diode.

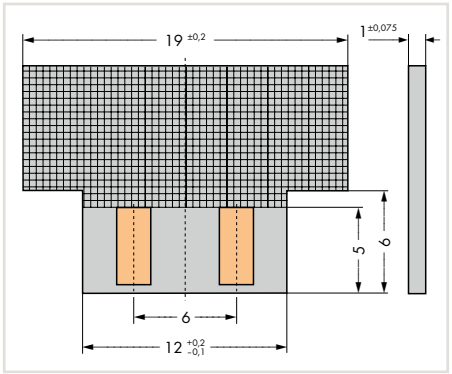

Dimensions of self-assembled PCBs:
Module height: 2 mm at 5.2 mm module width
Module height: 3.3 mm at 10.4 mm module width



When closing the cover, please insert cover as shown in the illustration.



Opening the cover via operating tool (2.5 mm blade).



Opening the cover via multi-purpose operating tool for component plugs.

PUSH-IN CAGE CLAMP®

TOPJOB® S
Component Plugs on Carrier Terminal Blocks 2.5 (4) mm²
2042 Series

1

Component plug	Component plug
Plug width 20.7 mm / 0.815 inch	**Plug width 25.9 mm / 1.02 inch**





❶ Length of 2002-1661: 66.5 mm / 2.62 inch 2-conductor carrier terminal block
❷ Length of 2002-1761: 76.8 mm / 3.02 inch 3-conductor carrier terminal block
❸ Length of 2002-1861: 87.5 mm / 3.45 inch 4-conductor carrier terminal block
❹ Length of 2002-1961: 72.9 mm / 2.87 inch 2-conductor carrier terminal block, with additional jumper position
❺ See application notes for:
Push-in type wire jumper, page 138
Colored push-in type jumper bar, page 134
Staggered jumper, page 136

	Item No.	Pack. Unit
Component plug, with fiber optics, 8-pole, 20.7 mm wide		
◯	**2042-341**	5

	Item No.	Pack. Unit
Component plug, with fiber optics, 10-pole, 25.9 mm wide		
◯	**2042-351**	5

Accessories for Carrier Terminal Blocks

Appropriate marking system: WMB/Mini-WSB/Marking strips (see Section 13)

2-conductor carrier terminal block,

❶ 

0.25 ... 2.5 (4) mm² / 22 ... 12 AWG
Terminal block width 5.2 mm / 0.205 inch

gray	**2002-1661**	50

End and intermediate plate, 1 mm thick



orange	**2002-1692**	100 (4x25)
gray	**2002-1691**	100 (4x25)

3-conductor carrier terminal block,

❷ 

0.25 ... 2.5 (4) mm² / 22 ... 12 AWG
Terminal block width 5.2 mm / 0.205 inch

gray	**2002-1761**	50

End and intermediate plate, 1 mm thick



orange	**2002-1792**	100 (4x25)
gray	**2002-1791**	100 (4x25)

4-conductor carrier terminal block,

❸ 

0.25 ... 2.5 (4) mm² / 22 ... 12 AWG
Terminal block width 5.2 mm / 0.205 inch

gray	**2002-1861**	50

End and intermediate plate, 1 mm thick



orange	**2002-1892**	100 (4x25)
gray	**2002-1891**	100 (4x25)

2-conductor carrier terminal block,

❹ 

0.25 ... 2.5 (4) mm² / 22 ... 12 AWG
Terminal block width 5.2 mm / 0.205 inch

gray	**2002-1961**	50

End and intermediate plate, 1 mm thick



orange	**2002-1992**	100 (4x25)
gray	**2002-1991**	100 (4x25)

Protective warning marker, with black high-voltage symbol, for 5 terminal blocks



yellow	**2002-115**	100 (4x25)

Push-in type wire jumper, insulated, wire size 1.5 mm², I_N 18 A

❺ 

L = 60 mm	**2009-412**	100 (10x10)
L = 110 mm	**2009-414**	100 (10x10)
L = 250 mm	**2009-416**	100 (10x10)

Push-in type jumper bar, insulated, I_N 25 A, light gray

❺ 

2-way	**2002-402**	200 (8x25)
3-way	**2002-403**	200 (8x25)
4-way	**2002-404**	200 (8x25)
5-way	**2002-405**	100 (4x25)
6-way	**2002-406**	100 (4x25)
7-way	**2002-407**	100 (4x25)
8-way	**2002-408**	100 (4x25)
9-way	**2002-409**	100 (4x25)
10-way	**2002-410**	100 (4x25)

Push-in type jumper bar, insulated, I_N 25 A, light gray



from 1 to 3	**2002-433**	200 (8x25)
from 1 to 4	**2002-434**	200 (8x25)
from 1 to 5	**2002-435**	100 (4x25)
from 1 to 6	**2002-436**	100 (4x25)
from 1 to 7	**2002-437**	100 (4x25)
from 1 to 8	**2002-438**	100 (4x25)
from 1 to 9	**2002-439**	100 (4x25)
from 1 to 10	**2002-440**	100 (4x25)

Multi-purpose operating tool, for component plugs

	2002-116	5

Staggered jumper, insulated, I_N 25 A, light gray

❺ 

2-way	**2002-472**	100 (4x25)
3-way	**2002-473**	100 (4x25)
4-way	**2002-474**	100 (4x25)
5-way	**2002-475**	50 (2x25)
6-way	**2002-476**	50 (2x25)
7-way	**2002-477**	50 (2x25)
8-way	**2002-478**	50 (2x25)
9-way	**2002-479**	50 (2x25)
10-way	**2002-480**	50 (2x25)
11-way	**2002-481**	50 (2x25)
12-way	**2002-482**	50 (2x25)

WMB Multi marking system, white, 10 strips with 10 markers per card, 5 ... 5.2 mm stretchable

plain	**793-5501**	5

WMB Multi marking system, plain, 10 strips with 10 markers per card, 5 ... 5.2 mm stretchable



yellow	**793-5501/000-002**	
red	**793-5501/000-005**	
blue	**793-5501/000-006**	
gray	**793-5501/000-007**	
orange	**793-5501/000-012**	
light green	**793-5501/000-017**	
green	**793-5501/000-023**	
violet	**793-5501/000-024**	

5

Overview of certification organizations, see page 654

TOPJOB® S
Modular Connectors and Connector Strips
1 (1.5) mm², 2000 Series and 1.5 (2.5) mm², 2001 Series and 2.5 (4) mm², 2002 Series

1

1.14 … 1 (1.5) mm² ❶ | 24 … 16 AWG 500 V/6 kV/3 ❹ I_N 13.5 A Terminal block width 3.5 mm / 0.138 inch 9 … 11 mm / 0.35 … 0.43 inch	0.25 … 1.5 (2.5) mm² ❷ | 22 … 14 AWG 500 V/6 kV/3 ❹ | 300 V, 15 A I_N 18 A Terminal block width 4.2 mm / 0.165 inch 9 … 11 mm / 0.35 … 0.43 inch ❺	0.25 … 2.5 (4) mm² ❸ | 22 … 12 AWG 500 V/6 kV/3 ❹ | 300 V, 20 A I_N 24 A Terminal block width 5.2 mm / 0.205 inch 10 … 12 mm / 0.39 … 0.47 inch ❺





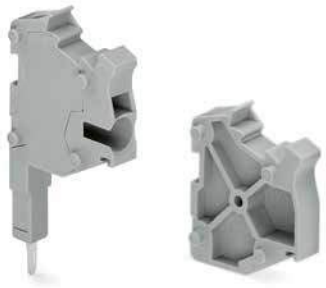

	Item No.	Pack. Unit
Modular TOPJOB® S connector, for jumper contact slot, snaps together, gray		
1-pole	**2000-510**	100 (4x25)
Modular TOPJOB® S connector, for jumper contact slot, snaps together, gray Terminal block width: 5 mm / 0.197 inch		
1-pole	**2000-511**	100 (4x25)
Spacer module, snaps together, bridges commoned terminal blocks		
gray	**2000-549**	100 (4x25)
TOPJOB® S connector strip, for jumper contact slot, gray		
2-pole	**2000-552**	25
3-pole	**2000-553**	25
4-pole	**2000-554**	25
5-pole	**2000-555**	10
6-pole	**2000-556**	10
7-pole	**2000-557**	10
8-pole	**2000-558**	10
9-pole	**2000-559**	10
10-pole	**2000-560**	10
Item-Specific Accessories		
End plate, for modular TOPJOB® S connector, 1.5 mm thick		
gray	**2002-541**	100 (4x25)
WMB Inline, plain, 2,300 WMB markers (3.5 mm) per reel		
white	**2009-113**	1
WMB Multi marking system, white, 10 strips with 10 markers per card, for 3.5 mm terminal block width		
plain	**793-3501**	5

	Item No.	Pack. Unit
Modular TOPJOB® S connector, for jumper contact slot, snaps together, gray		
1-pole	**2001-511**	100 (4x25)
Spacer module, snaps together, bridges commoned terminal blocks		
gray	**2001-549**	100 (4x25)
TOPJOB® S connector strip, for jumper contact slot, gray		
2-pole	**2001-552**	25
3-pole	**2001-553**	25
4-pole	**2001-554**	25
5-pole	**2001-555**	10
6-pole	**2001-556**	10
7-pole	**2001-557**	10
8-pole	**2001-558**	10
9-pole	**2001-559**	10
10-pole	**2001-560**	10
Item-Specific Accessories		
End plate, for modular TOPJOB® S connector, 1.5 mm thick		
gray	**2002-541**	100 (4x25)
WMB Inline, plain, 2,000 WMB markers (4 mm) per reel, 4 … 4.2 mm stretchable		
white	**2009-114**	1
WMB Multi marking system, white, 10 strips with 10 markers per card, 4 … 4.2 mm stretchable		
plain	**793-4501**	5
WMB Multi marking system, plain, 10 strips with 10 markers per card, 4 … 4.2 mm stretchable		
yellow	**793-4501/000-002**	
red	**793-4501/000-005**	
blue	**793-4501/000-006**	
gray	**793-4501/000-007**	
orange	**793-4501/000-012**	
light green	**793-4501/000-017**	
green	**793-4501/000-023**	
violet	**793-4501/000-024**	
		5

	Item No.	Pack. Unit
Modular TOPJOB® S connector, for jumper contact slot, snaps together, gray		
1-pole	**2002-511**	100 (4x25)
Spacer module, snaps together, bridges commoned terminal blocks		
gray	**2002-549**	100 (4x25)
TOPJOB® S connector strip, for jumper contact slot, gray		
2-pole	**2002-552**	25
3-pole	**2002-553**	25
4-pole	**2002-554**	25
5-pole	**2002-555**	10
6-pole	**2002-556**	10
7-pole	**2002-557**	10
8-pole	**2002-558**	10
9-pole	**2002-559**	10
10-pole	**2002-560**	10
Item-Specific Accessories		
End plate, for modular TOPJOB® S connector, 1.5 mm thick		
gray	**2002-541**	100 (4x25)
WMB Inline, plain, 1,500 WMB markers (5 mm) per reel, 5 … 5.2 mm stretchable		
white	**2009-115**	1
WMB Multi marking system, white, 10 strips with 10 markers per card, 5 … 5.2 mm stretchable		
plain	**793-5501**	5
WMB Multi marking system, plain, 10 strips with 10 markers per card, 5 … 5.2 mm stretchable		
yellow	**793-5501/000-002**	
red	**793-5501/000-005**	
blue	**793-5501/000-006**	
gray	**793-5501/000-007**	
orange	**793-5501/000-012**	
light green	**793-5501/000-017**	
green	**793-5501/000-023**	
violet	**793-5501/000-024**	
		5

Overview of certification organizations, see page 654

TOPJOB® S
Modular Connectors and Connector Strips
Installation

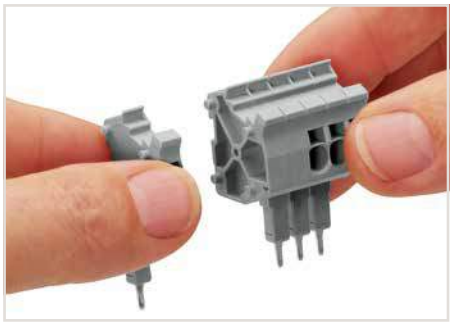

Snapping connectors and spacers together to assemble a multipole connector.

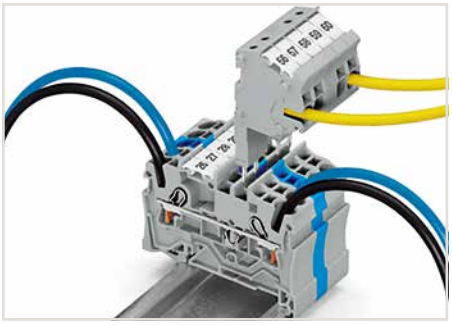

The modular TOPJOB® S connectors also connect conductors of the same size as the terminal blocks being used.

❶ Conductor range: 0.14 … 1.5 mm² "s + f-st";
Push-in termination: 0.5 … 1.5 mm² "s"
and 0.5 … 0.75 mm²
"insulated ferrule, 10 mm"

❷ Conductor range: 0.25 … 2.5 mm² "s + f-st";
Push-in termination: 0.5 … 2.5 mm² "s"
and 0.75 … 1.5 mm²
"insulated ferrule, 12 mm"

❸ Conductor range: 0.25 … 4 mm² "s + f-st";
Push-in termination: 0.75 … 4 mm² "s"
and 0.75 … 2.5 mm²
"insulated ferrule, 12 mm"

❹ 500 V = rated voltage
6 kV = rated surge voltage
3 = pollution degree
(see Section 14)

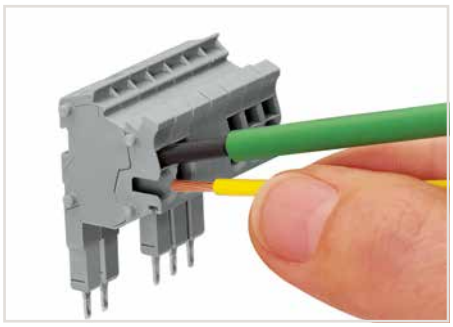

Conductor termination via:
- Operating tool for fine-stranded conductors without ferrules
- Push-in connection of solid conductors

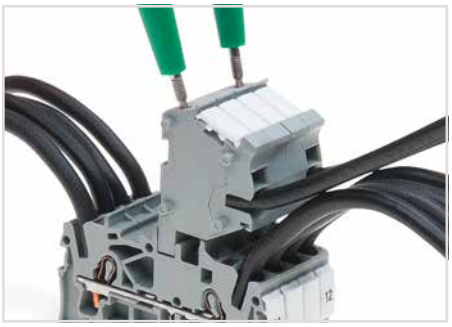

TOPJOB® S Connectors with a 2 mm Ø test socket for testing voltage via 2-pole voltage tester

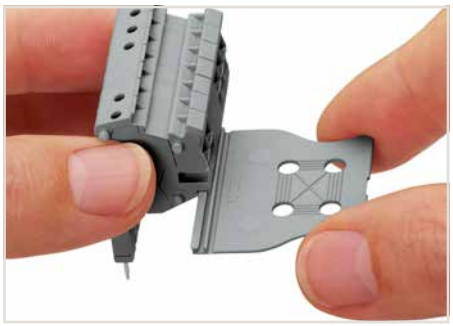

Snapping on a strain relief plate.

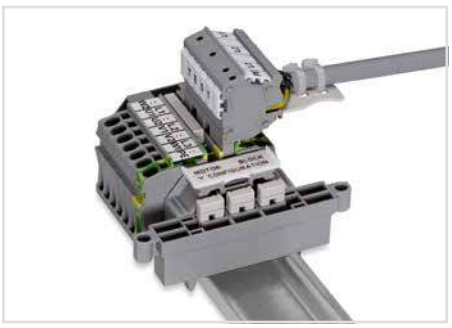

Rail-mount terminal block assembly for electric motor wiring

Note:
According to EN 61984, pluggable connectors without current interrupting capacity shall not be mated and unmated when live or under load.

Accessories

Appropriate marking systems:
WMB/Marking

Test plug, with 500 mm cable, 2.3 mm Ø, max. 42 V			
	yellow	**210-137**	50
Test plug, with 500 mm cable, 2 mm Ø, max. 42 V			
	red	**210-136**	50
Strain relief plate, gray			
	35 mm wide	**734-326**	100 (4x25)
	6 mm wide	**734-327**	100 (4x25)
	12.5 mm wide	**734-328**	100 (4x25)
	25 mm wide	**734-329**	100 (4x25)
Marking strip, plain, 11 mm wide, 50 m reel			
	white	**2009-110**	1

TOPJOB® S
Modular Connectors and Connector Strips
4 (6) mm², 2004, 2006, 2010 and 2016 Series

1

0.5 … 4 (6) mm² ❶ | 20 … 10 AWG 500 V/6 kV/3 ❷ I_N 32 A Terminal block width 6.2 mm / 0.244 inch 11 … 13 mm / 0.43 … 0.51 inch	0.5 … 4 (6) mm² ❶ | 20 … 10 AWG 500 V/6 kV/3 ❷ I_N 32 A Terminal block width 7.5 mm / 0.295 inch 11 … 13 mm / 0.43 … 0.51 inch	0.5 … 4 (6) mm² ❶ | 20 … 10 AWG 500 V/6 kV/3 ❷ I_N 32 A Terminal block width 10 mm / 0.394 inch 11 … 13 mm / 0.43 … 0.51 inch







	Item No.	Pack. Unit
Modular TOPJOB® S connector, for jumper contact slot, snaps together, gray		
1-pole	**2004-511**	100 (4x25)
Spacer module, snaps together, bridges commoned terminal blocks		
gray	**2004-549**	100 (4x25)
TOPJOB® S connector strip, for jumper contact slot, gray		
2-pole	**2004-552**	25
3-pole	**2004-553**	25
4-pole	**2004-554**	25
5-pole	**2004-555**	10

	Item No.	Pack. Unit
Modular TOPJOB® S connector, for jumper contact slot, snaps together, gray		
1-pole	**2006-511**	50 (2x25)
Spacer module, snaps together, bridges commoned terminal blocks		
gray	**2006-549**	50 (2x25)

	Item No.	Pack. Unit
Modular TOPJOB® S connector, for jumper contact slot, snaps together, gray		
1-pole	**2010-511**	50 (2x25)
Spacer module, snaps together, bridges commoned terminal blocks		
gray	**2010-549**	50 (2x25)

Item-Specific Accessories

Test plug, with 500 mm cable, 2.3 mm Ø, max. 42 V



yellow **210-137** 50

Accessories

Appropriate marking systems: WMB/Marking strips (see Section 13)

End plate, for modular TOPJOB® S connector, 1.5 mm thick



gray **2004-541** 100 (4x25)

Test plug, with 500 mm cable, 2 mm Ø, max. 42 V



red **210-136** 50

Strain relief plate, gray



35 mm wide	**734-326**	100 (4x25)
6 mm wide	**734-327**	100 (4x25)
12.5 mm wide	**734-328**	100 (4x25)
25 mm wide	**734-329**	100 (4x25)

Marking strip, plain, 11 mm wide, 50 m reel



white **2009-110** 1

WMB Multi marking system, white, 10 strips with 10 markers per card, 5 … 5.2 mm stretchable

plain **793-5501** 5

Overview of certification organizations, see page 654

0.5 ... 4 (6) mm² ❶ | 20 ... 10 AWG
500 V/6 kV/3 ❷
I_N 32 A

Terminal block width 12 mm / 0.472 inch
11 ... 13 mm / 0.43 ... 0.51 inch



❶ Conductor range: 0.5 ... 6 mm² "s + f-st"; Push-in termination: 1 ... 6 mm² "s" and 0.75 ... 4 mm² "insulated ferrule, 12 mm"

❷ 500 V = rated voltage
6 kV = rated surge voltage
3 = pollution degree
(see Section 14)

	Item No.	Pack. Unit
Modular TOPJOB® S connector, for jumper contact slot, snaps together, gray		
◯ 1-pole	**2016-511**	50 (2x25)
Spacer module, snaps together, bridges commoned terminal blocks		
◯ gray	**2016-549**	50 (2x25)

Note:
According to EN 61984, pluggable connectors without current interrupting capacity shall not be mated and unmated when live or under load.

TOPJOB® S – L-Type Test Plug Modules for Testing Rail-Mount Terminal Blocks Terminal Block Width 5.2 mm via Conductor Wire Opening

2.5 (4) mm², 2002 Series

1

0.25 … 2.5 (4) mm² ❶ | 22 … 12 AWG
500 V/6 kV/3 ❷
I_N 18 A

Terminal block width 5.2 mm / 0.205 inch
10 … 12 mm / 0.39 … 0.47 inch



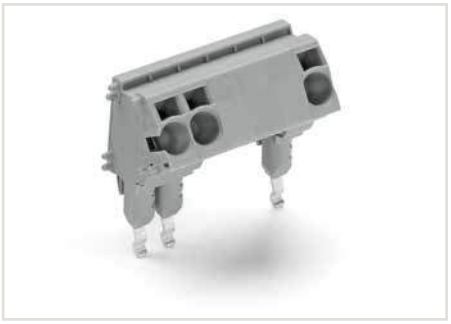

TOPJOB® S L-type test plug assembly:
- L-type test plug modules
- L-type spacer modules (max. 10-pole) to skip terminal blocks

❶ Conductor range: 0.25 … 4 mm² "s + f-st"; Push-in termination: 0.75 … 4 mm² "s" and 0.75 … 2.5 mm² "insulated ferrule, 12 mm"

❷ 500 V = rated voltage
6 kV = rated surge voltage
3 = pollution degree
(see Section 14)

	Item No.	Pack. Unit
TOPJOB® S L-type test plug module, snaps together, gray According to EN 61984, pluggable connectors without current interrupting capacity shall not be mated and unmated when live or under load.		
1-pole	**2002-611**	100 (4x25)
TOPJOB® S L-type spacer module, snaps together, bridges commoned terminal blocks		
gray	**2002-649**	100 (4x25)



L-type test plug modules fitted in a triple-deck terminal block



TOPJOB® S L-type test plugs for testing rail-mount terminal blocks via conductor entries

Accessories L-Type Test Plug Modules

Appropriate marking systems:
WMB/WMB Inline/Mini-WSB

		Item No.	Pack. Unit
End plate, for modular TOPJOB® S test plugs, 1.5 mm thick			
	gray	**2002-641**	100 (4x25)
Test plug, with 500 mm cable, 2 mm Ø, max. 42 V			
	red	**210-136**	50
Test plug, with 500 mm cable, 2.3 mm Ø, max. 42 V			
	yellow	**210-137**	50
Strain relief plate, gray			
	35 mm wide	**734-326**	100 (4x25)
	6 mm wide	**734-327**	100 (4x25)
	12.5 mm wide	**734-328**	100 (4x25)
	25 mm wide	**734-329**	100 (4x25)
WMB Inline, plain, 1,500 WMB markers (5 mm) per reel, 5 … 5.2 mm stretchable			
	white	**2009-115**	1
WMB Multi marking system, white, 10 strips with 10 markers per card, 5 … 5.2 mm stretchable			
	plain	**793-5501**	5

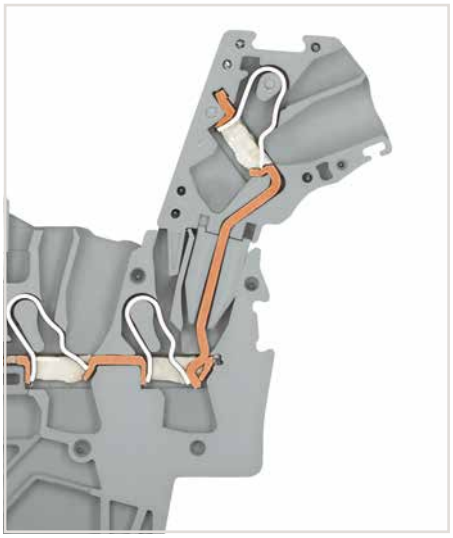

L-type test plug module – cross-sectional view of contacts

Overview of certification organizations, see page 654

PUSH-IN CAGE CLAMP®

TOPJOB® S
Test Plug Adapter and Testing Tap
2009 Series

Test plug adapter	Testing tap	





	Item No.	Pack. Unit		Item No.	Pack. Unit	
Test plug adapter, for 4 mm Ø test plug			Testing tap, for max. 2.5 mm² (14 AWG)			
○ gray	**2009-174**	100 (4x25)	○ gray	**2009-182**	100 (4x25)	
Note: Power must be switched off when installing the test plug adapter. The guidelines rules for working on live installations must be observed.			**Note:** Power must be switched off when installing the test plug adapter. The guidelines rules for working on live installations must be observed.			

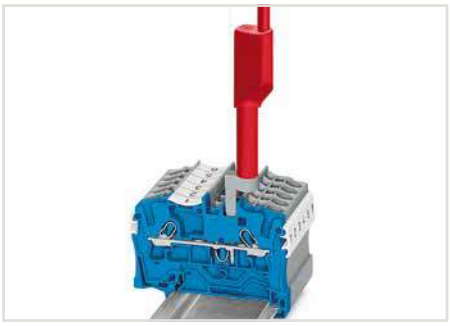

Test plug adapter (2009-174, CAT I) for 4 mm Ø plugs – compatible with 2000 to 2016 Series



Testing tap (2009-182) for tool-free connection of test cables up to 2.5 mm² (12 AWG) – compatible with 2000 to 2016 Series

TOPJOB® S
Colored Push-In Type Jumper Bars
2000 Series and 2002 Series

Push-in type jumper bar	Push-in type jumper bar	Push-in type jumper bar







	Item No.	Pack. Unit		Item No.	Pack. Unit		Item No.	Pack. Unit
Push-in type jumper bar, insulated, I_N 14 A, red			**Push-in type jumper bar,** insulated, I_N 14 A, blue			Push-in type jumper bar, insulated, I_N 25 A, green-yellow		
2-way	**2000-402/000-005**	200 (8x25)	2-way	**2000-402/000-006**	200 (8x25)	2-way	**2000-402/000-018**	200 (8x25)
3-way	**2000-403/000-005**	200 (8x25)	3-way	**2000-403/000-006**	200 (8x25)			
4-way	**2000-404/000-005**	200 (8x25)	4-way	**2000-404/000-006**	200 (8x25)			
5-way	**2000-405/000-005**	100 (4x25)	5-way	**2000-405/000-006**	100 (4x25)			
6-way	**2000-406/000-005**	100 (4x25)	6-way	**2000-406/000-006**	100 (4x25)			
7-way	**2000-407/000-005**	100 (4x25)	7-way	**2000-407/000-006**	100 (4x25)			
8-way	**2000-408/000-005**	100 (4x25)	8-way	**2000-408/000-006**	100 (4x25)			
9-way	**2000-409/000-005**	100 (4x25)	9-way	**2000-409/000-006**	100 (4x25)			
10-way	**2000-410/000-005**	100 (4x25)	10-way	**2000-410/000-006**	100 (4x25)			
Push-in type jumper bar, insulated, I_N 25 A, red			Push-in type jumper bar, insulated, I_N 25 A, blue					
2-way	**2002-402/000-005**	200 (8x25)	2-way	**2002-402/000-006**	200 (8x25)			
3-way	**2002-403/000-005**	200 (8x25)	3-way	**2002-403/000-006**	200 (8x25)			
4-way	**2002-404/000-005**	200 (8x25)	4-way	**2002-404/000-006**	200 (8x25)			
5-way	**2002-405/000-005**	100 (4x25)	5-way	**2002-405/000-006**	100 (4x25)			
6-way	**2002-406/000-005**	100 (4x25)	6-way	**2002-406/000-006**	100 (4x25)			
7-way	**2002-407/000-005**	100 (4x25)	7-way	**2002-407/000-006**	100 (4x25)			
8-way	**2002-408/000-005**	100 (4x25)	8-way	**2002-408/000-006**	100 (4x25)			
9-way	**2002-409/000-005**	100 (4x25)	9-way	**2002-409/000-006**	100 (4x25)			
10-way	**2002-410/000-005**	100 (4x25)	10-way	**2002-410/000-006**	100 (4x25)			



An application example: colored push-in type jumper bars are used with sensor terminal blocks.

TOPJOB® S
Star Point Jumpers and Delta Jumpers

Star point jumper 800 V/8 kV/3 I_N = I_N terminal block	Delta jumper 800 V/8 kV/3 I_N = I_N terminal block



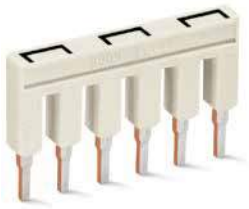

Item No.	Pack. Unit	Item No.	Pack. Unit
Star point jumper, insulated, 1-3-5, light gray		Delta jumper, insulated, 1-2 3-4 5-6, light gray	
2000-405/011-000	100 (4x25)	**2000-406/020-000**	100 (4x25)
2001-405/011-000	100 (4x25)	**2001-406/020-000**	100 (4x25)
2002-405/011-000	100 (4x25)	**2002-406/020-000**	100 (4x25)
2004-405/011-000	100 (4x25)	**2004-406/020-000**	100 (4x25)
2006-405/011-000	50 (2x25)		
2010-405/011-000	50 (2x25)		
2016-405/011-000	50 (2x25)		

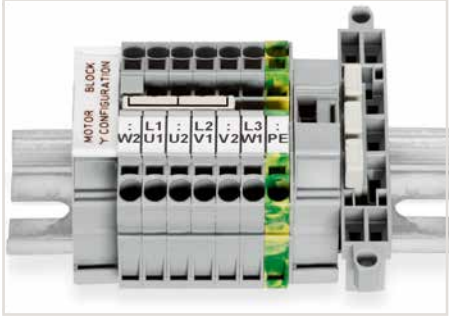

This star point jumper has been specially developed to create a "star point" and is used on motor terminal boards equipped with TOPJOB® S rail-mount terminal blocks.



This delta jumper has been specially developed to create a delta configuration and is used on motor terminal boards equipped with TOPJOB® S rail-mount terminal blocks.

TOPJOB® S
Staggered Jumpers
2002 Series

1

Staggered jumper
400 V/6 kV/3
I_N 25 A



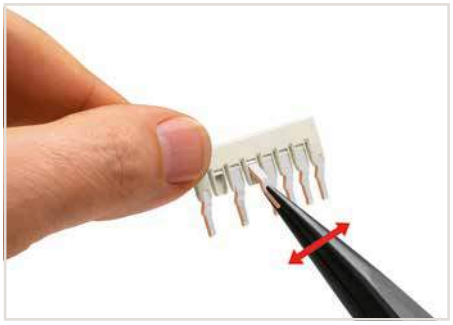

Staggered jumper (seven contacts)
Individual jumper contacts can be broken off by bending them. The remaining piece of insulation will meet requirements for clearances and creepage distances.



Staggered jumpers (seven contacts)

	Item No.	Pack. Unit
Staggered jumper, insulated, for 2002, 2003 and 2022 Series rail-mount terminal blocks, light gray		
◯ 2-way	**2002-472**	100 (4x25)
◯ 3-way	**2002-473**	100 (4x25)
◯ 4-way	**2002-474**	100 (4x25)
◯ 5-way	**2002-475**	50 (2x25)
◯ 6-way	**2002-476**	50 (2x25)
◯ 7-way	**2002-477**	50 (2x25)
◯ 8-way	**2002-478**	50 (2x25)
◯ 9-way	**2002-479**	50 (2x25)
◯ 10-way	**2002-480**	50 (2x25)
◯ 11-way	**2002-481**	50 (2x25)
◯ 12-way	**2002-482**	50 (2x25)

Commoning using staggered jumpers
Individual jumper contacts can be broken off by bending them. The remaining piece of insulation will meet the requirements for clearances and creepage distances.
This makes it possible to create custom staggered jumpers, e.g. for bridging over a terminal block with a different potential. When creating the jumpers, ensure only one contact lug is in contact with the terminal block.
The contact lugs of the customized staggered jumpers contact the terminal blocks via the gaps created in the second jumper. Insert and press jumper into the jumper slot until it hits the backstop.

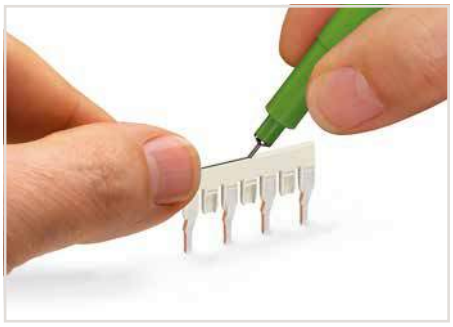

Marking a staggered jumper using a felt-tip pen.

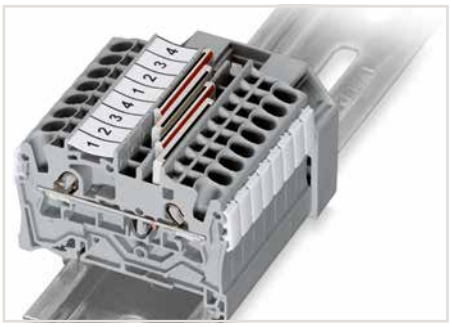

Locate red stripes of the staggered jumpers on the inside. Insert staggered jumper and push down until it hits backstop.

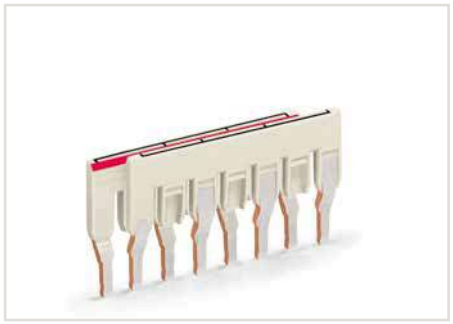

Staggering jumpers in a single jumper slot.
When creating custom staggered jumpers (e.g., for bridging over a terminal block with a different potential), make sure that only one contact lug is in contact with the terminal block.
The contact lugs of the customized staggered jumpers contact the terminal blocks via the gaps created in the second jumper.
Insert and press the ready-made jumper assembly into the jumper slot until it hits backstop.

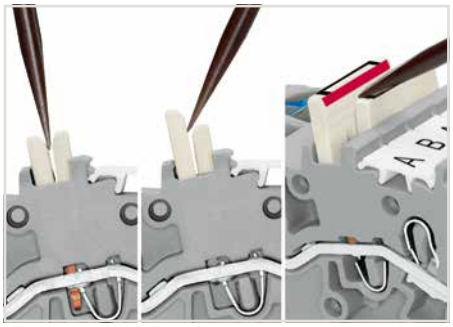

Removing a staggered jumper:
Insert the operating tool between the staggered jumpers, then lift up the jumper.

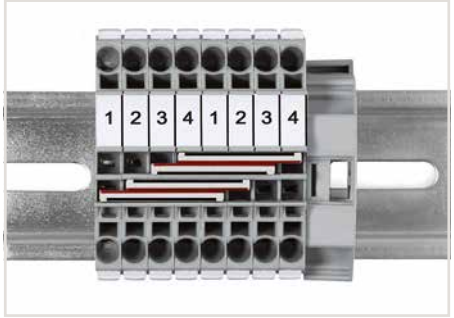

Commoning two potentials in one single jumper slot via extremely slim staggered jumpers.

TOPJOB® S
Adjacent Jumpers for Continuous Commoning and Collective Jumper Carrier
2002 Series and 2009 Series

Adjacent jumper for continuous commoning	Adjacent jumper for continuous commoning	Collective jumper carrier







	Item No.	Pack. Unit		Item No.	Pack. Unit		Item No.	Pack. Unit
Adjacent jumper for continuous commoning, insulated, I_N 25 A, light gray			Adjacent jumper for continuous commoning, insulated, I_N 25 A, 1 to 3			Collective jumper carrier, for DIN-35 rail, compatible with 2000 to 2016 Series jumpers		
○ 2-way	**2002-400**	100 (4x25)	○ light gray	**2002-423**	100 (4x25)	○ gray	**2009-180**	25
			red	**2002-423/000-005**	100 (4x25)			
			blue	**2002-423/000-006**	100 (4x25)			

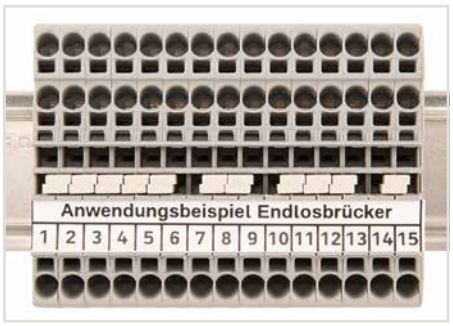

Continuous jumpers (2002 Series) readily connect an endless number of terminal blocks to each other via a single jumper slot. Use the second jumper slot for additional commoning or testing.



The 1-to-3 adjacent jumper for continuous commoning enables every other terminal block to be commoned. For example, positive and negative potentials can be accommodated alongside each other.



Collective carrier for TOPJOB® S jumpers

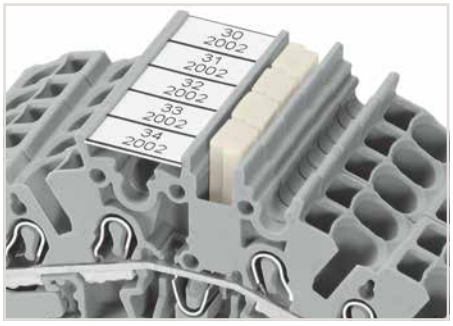

Adjacent jumpers for continuous commoning (2002-400)

TOPJOB® S
Push-In Type Wire Jumpers
2009 Series

1

Push-in type wire jumper	Push-in type wire jumper
I_N 9 A Conductor size 0.75 mm²	I_N 18 A Conductor size 1.5 mm²





	Item No.	Pack. Unit		Item No.	Pack. Unit
Push-in type wire jumper, insulated, wire size 0.75 mm², for 2000 and 2020 Series rail-mount terminal blocks			Push-in type wire jumper, insulated, wire size 1.5 mm², for 2001, 2002, 2003 and 2022 Series rail-mount terminal blocks		
L = 60 mm	**2009-402**	100 (10x10)	L = 60 mm	**2009-412**	100 (10x10)
L = 110 mm	**2009-404**	100 (10x10)	L = 110 mm	**2009-414**	100 (10x10)
L = 250 mm	**2009-406**	100 (10x10)	L = 250 mm	**2009-416**	100 (10x10)



Push-in type wire jumpers common terminal blocks over longer distances and across multiple levels.

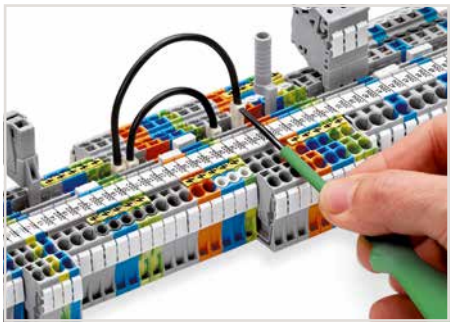

Push down the wire jumper until fully inserted. Lift the jumper with an operating tool for rewiring.

TOPJOB® S
Vertical Jumpers
2000 Series and 2002 Series

Double-deck vertical jumper 500 V/6 kV/3 I_N 13.5 A	Double-deck vertical jumper 500 V/6 kV/3 I_N 24 A	Triple-deck vertical jumper 500 V/6 kV/3 I_N 24 A







	Item No.	Pack. Unit
Double-deck vertical jumper, insulated		
◯ light gray	**2000-492**	100 (4x25)

	Item No.	Pack. Unit
Double-deck vertical jumper, insulated		
◯ light gray	**2002-492**	100 (4x25)
● orange	**2002-492/000-012**	100 (4x25)

	Item No.	Pack. Unit
Triple-deck vertical jumper, insulated		
◯ light gray	**2002-493**	100 (4x25)



Created for double- and triple-deck TOPJOB® S Terminal Blocks, the vertical jumpers can common two or three levels. Clearly marked numerals (“2” and “3”) distinguish the double-deck (2002-492) and triple-deck vertical jumpers (2002-493), even when inserted.

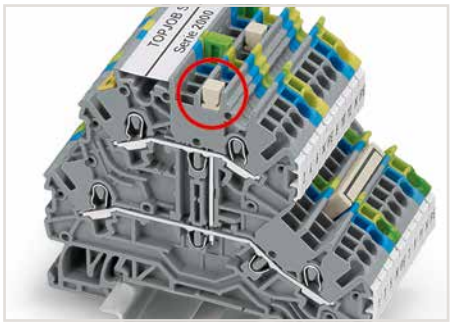

Commoning two levels via double-deck vertical jumper (2000-492).

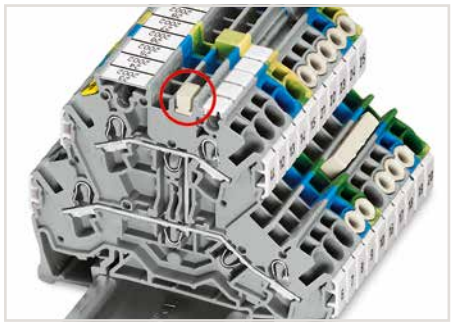

Commoning two levels via double-deck vertical jumper (2002-492).



Commoning three levels via triple-deck vertical jumper (2002-493).

TOPJOB® S
Disconnect Plugs and Blind Plugs for Carrier Terminal Blocks
2002 Series and 2006 Series

1

Disconnect plug for carrier terminal blocks 400 V/6 kV/3 I_N 10 A	Disconnect plug for carrier terminal blocks 800 V/8 kV/3 I_N 30 A	Blind plug for carrier terminal blocks







	Item No.	Pack. Unit
Disconnect plug for carrier terminal blocks, suitable when using a carrier terminal block as disconnect terminal block		
orange	**2002-401**	100 (4x25)

	Item No.	Pack. Unit
Disconnect plug for carrier terminal blocks, suitable when using a carrier terminal block as disconnect terminal block		
orange	**2006-401**	100 (4x25)
white	**2006-401/000-050**	100 (4x25)

	Item No.	Pack. Unit
Blind plug for carrier terminal blocks, indicates a disconnection		
orange	**2006-451**	100 (4x25)



Carrier terminal block (2002-1661) with disconnect plug (2002-401) in operating position

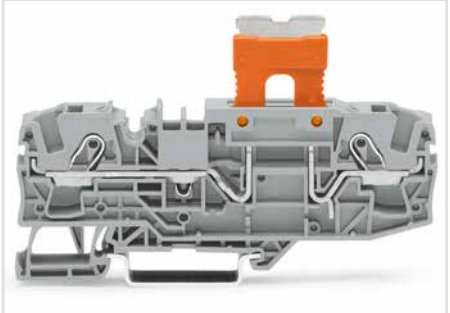

Carrier terminal block (2006-401) with disconnect plug (2006-1661) in parked position

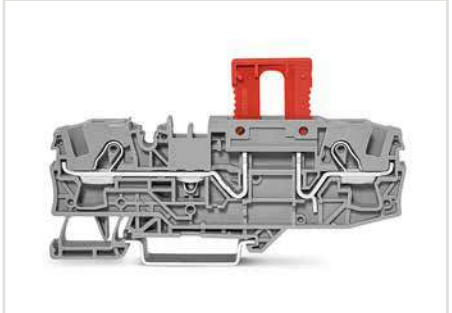

Carrier terminal block with blind plug (2006-451) in disconnect position

TOPJOB® S
Lockout Caps
2006 Series

Lockout cap

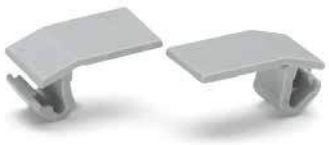

	Item No.	Pack. Unit
Lockout cap, for conductor entry and operating slot		
gray	**2006-191**	25



Lockout cap (2006-191) seals unused conductor entry.

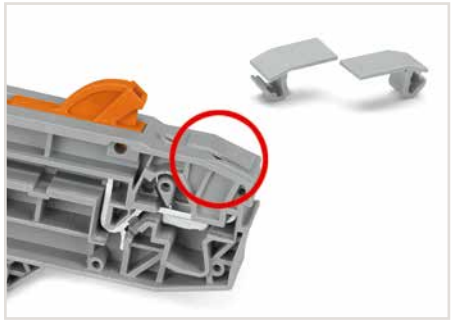

Lockout cap (2006-191) seals unused conductor entry.

TOPJOB® S
WMB Inline, Mini-WSB Inline and Marking Strips
2009 Series

WMB Inline	Mini-WSB Inline	Marking strip







	Item No.	Pack. Unit
WMB Inline, plain, 1,500 WMB markers (5 mm) per reel, 5 ... 5.2 mm stretchable		
◯ white	**2009-115**	1
WMB Inline, plain, 2,000 WMB markers (4 mm) per reel, 4 ... 4.2 mm stretchable		
◯ white	**2009-114**	1
WMB Inline, plain, 2,300 WMB markers (3.5 mm) per reel		
◯ white	**2009-113**	1

	Item No.	Pack. Unit
Mini-WSB Inline, plain, 1,700 WMB markers, 5 mm, on roll, 5 ... 5.2 mm stretchable		
◯ white	**2009-145**	1

	Item No.	Pack. Unit
Marking strip, plain, 11 mm wide, white		
◯ 50 m reel	**2009-110**	1

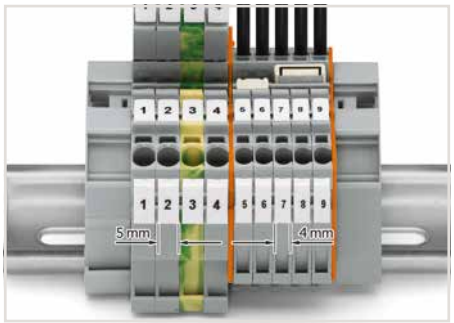

WMB Inline markers
2009-115 Markers for 5 ... 5.2 mm wide terminal blocks compared to 2009-114 Markers for 4 ... 4.2 mm wide terminal blocks



Printing WMB markers via ***smart***PRINTER.

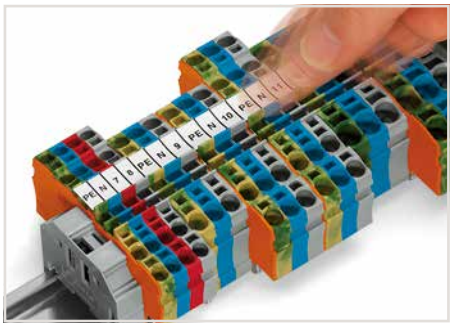

Marking strips:
Snapping a strip into the marker slots.

TOPJOB® S
Group Marker Carriers and Marker Carriers

Group marker carrier	Marker carrier





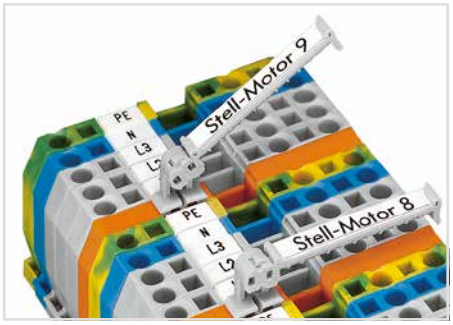

This pivoting group marker carrier has been developed for group marking of rail-mount terminal blocks to satisfy several customer requirements:
- Can be used in all multiprofile marker slots for rail-mount terminal bocks from 5 mm on or in spacer housings as shown above.
- Improves marking visibility due to difficult mounting conditions by pivoting into one of seven stable positions.

	Item No.	Pack. Unit
TOPJOB® S group marker carrier, snap-on type for jumper slot, gray		
◯ 5 mm wide	**2009-191**	50 (2x25)
◯ 10 mm wide	**2009-192**	50 (2x25)
◯ 15 mm wide	**2009-193**	50 (2x25)
TOPJOB® S group marker carrier, snap-on type for jumper slot, gray		
◯ 10 mm wide	**2009-196**	50 (2x25)

	Item No.	Pack. Unit
Marker carrier, for jumper slots 2002 Series, 5 mm wide		
◯ gray	**2002-161**	100 (4x25)



Using marker carriers for marking strips (2002-161) in jumper slots.

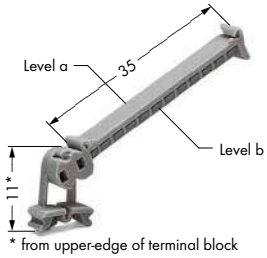

* from upper-edge of terminal block



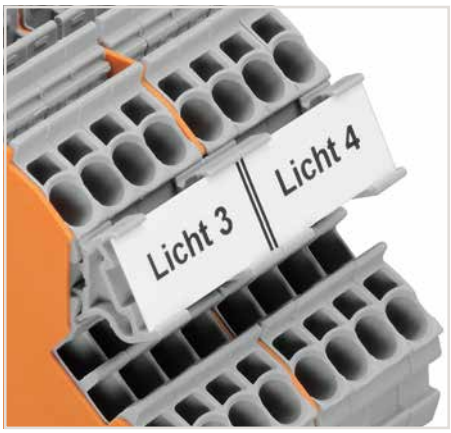

Using marker carriers for marking strips (2009-198) in lateral marker slots.

	Item No.	Pack. Unit
Pivoting group marker carrier		
◯ gray	**249-105**	50 (2x25)
Marker card, 4 x 30 markers/sheet		
◯ white	**209-183**	1
Protection marker cover		
transparent	**209-184**	50

	Item No.	Pack. Unit
Marker carrier, for lateral marker receptacle, 5 mm wide		
◯ gray	**2009-198**	200 (8x25)

TOPJOB® S
Crimping Tools

1

Variocrimp 4 crimping tool for insulated and uninsulated ferrules 0.25 … 4 mm² / 24 … 12 AWG	Variocrimp 16 crimping tool for insulated and uninsulated ferrules 6 … 16 mm² / 10 … 6 AWG





Item No.	Pack. Unit	Item No.	Pack. Unit
"Variocrimp 4" crimping tool, 0.25 … 4 mm² / 24 … 12 AWG		"Variocrimp 16" crimping tool, 6 … 16 mm² / 10 … 6 AWG	
206-204	1	**206-216**	1
Return spring for Variocrimp 4		Return spring for Variocrimp 16	
206-203	1	**206-213**	1
Ratchet spring		Ratchet spring	
206-210	1	**206-210**	1



Insert the ferruled conductor into the crimping station.



Squeeze handles until ratchet mechanism is released.

TOPJOB® S
Ferrules for Rail-mount Terminal Blocks



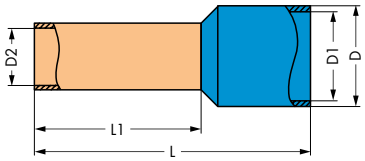

Ferrule, insulated, electro-tin-plated, electrolytic copper, gastight crimped, per DIN 46288, Part 4/09.09									
Conductor Size	Color	Strip Length	L	L 1	D	D 1	D 2	**Item No.**	Pack. Unit
0.5 mm² / 20 AWG	white	12 mm / 0.47 inch	16	10	3,1	2,6	1	**216-241**	1000
0.75 mm² / 18 AWG	gray	12 mm / 0.47 inch	16	10	3,3	2,8	1,2	**216-242**	1000
0.75 mm² / 18 AWG	gray	14 mm / 0.55 inch	18	12	3,3	2,8	1,2	**216-262**	1000
1 mm² / 18 AWG	red	12 mm / 0.47 inch	16	10	3,5	3	1,4	**216-243**	1000
1 mm² / 18 AWG	red	14 mm / 0.55 inch	18	12	3,5	3	1,4	**216-263**	1000
1.5 mm² / 16 AWG	black	12 mm / 0.47 inch	16	10	4	3,5	1,7	**216-244**	1000
1.5 mm² / 16 AWG	black	14 mm / 0.55 inch	18	12	4	3,5	1,7	**216-264**	1000
1.5 mm² / 16 AWG	black	20 mm / 0.79 inch	24	18	4	3,5	1,7	**216-284**	1000
2.5 mm² / 14 AWG	blue	12 mm / 0.47 inch	17	10	4,7	4,2	2,2	**216-246**	1000
2.5 mm² / 14 AWG	blue	14 mm / 0.55 inch	19	12	4,7	4,2	2,2	**216-266**	1000
2.5 mm² / 14 AWG	blue	20 mm / 0.79 inch	25	18	4,7	4,2	2,2	**216-286**	500
4 mm² / 12 AWG	gray	14 mm / 0.55 inch	20	12	5,4	4,8	2,8	**216-267**	500
4 mm² / 12 AWG	gray	20 mm / 0.79 inch	26	18	5,4	4,8	2,8	**216-287**	100
6 mm² / 10 AWG	yellow	14 mm / 0.55 inch	20	12	6,5	6,3	3,5	**216-208**	100
6 mm² / 10 AWG	yellow	20 mm / 0.79 inch	26	18	6,9	6,3	3,5	**216-288**	100
10 mm² / 8 AWG	blue	20 mm / 0.79 inch	28	18	8,4	7,6	4,5	**216-289**	100
16 mm² / 6 AWG	blue	23 mm / 0.91 inch	28	18	9,6	8,8	5,8	**216-210**	100

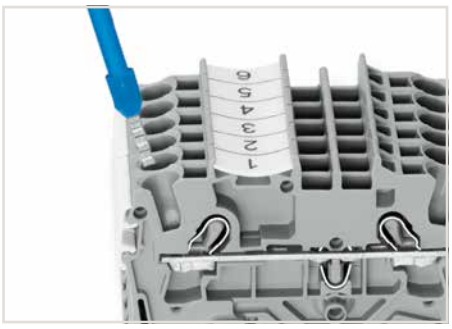

Fine-stranded conductors with ferrules from at least two sizes below the rated cross-section up to the rated cross-section can also be simply pushed in – without tools.

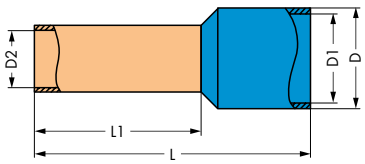

Dimensions in mm

Application notes:

- With "Variocrimp 4," the built-in crimping pressure control automatically adjusts force to the conductor cross section used. With "Variocrimp 16," it is necessary to select the wire gauge on the tool before crimping.
- Only one crimping station is needed to handle the specified conductor size range.
- Uniform compact crimping from all four sides for high conductor retention.
- No need to center the conductor into the ferrule.
- Conductor and ferrule insertion possible from both sides (for left- and right-handers).
- Built-in ratchet mechanism ensures gastight crimp connection.
- Crimping tools open automatically after crimping operation is complete.
- Comfortable handles for operator.

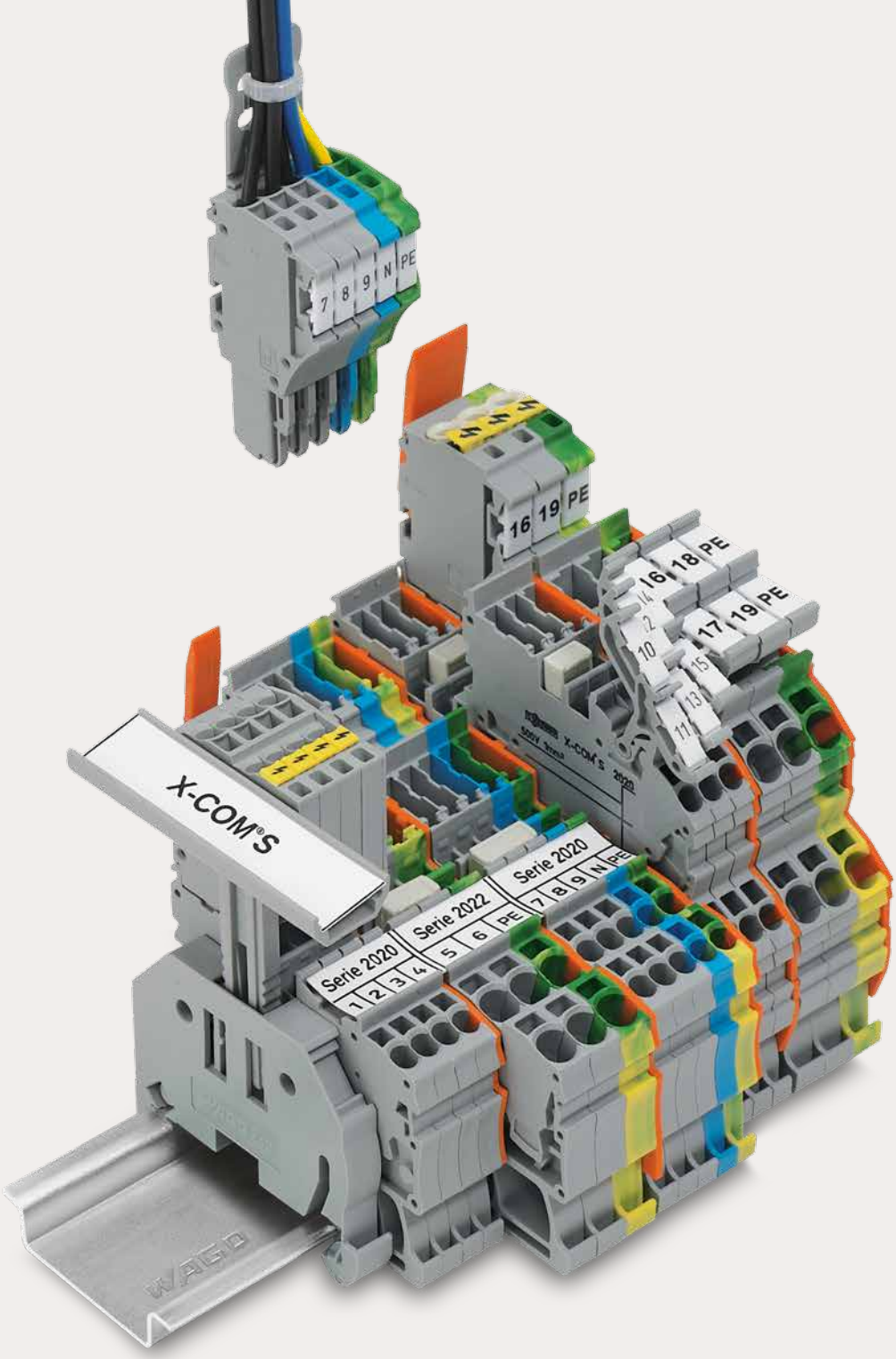

Rail-Mount Terminal Blocks with a Pluggable Connector, X-COM®S-SYSTEM

PUSH-IN CAGE CLAMP®

Rail-Mount Terminal Blocks with a Pluggable Connector, X-COM®S-SYSTEM with Push-in CAGE CLAMP® Connection

Front-Entry Wiring

			Page
	**X-COM®S-SYSTEM-MINI** **Through and Ground Conductor Carrier Terminal Blocks** 0.14 … 1 (1.5) mm² (24 … 16 AWG)	2020 Series	150
	**Double-Deck Carrier Terminal Blocks** 0.14 … 1 (1.5) mm² (24 … 16 AWG)	2020 Series	152
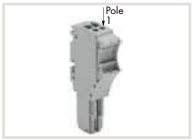	**1- and 2-Conductor Female Plugs** 0.14 … 1 (1.5) mm² (24 … 16 AWG)	2020 Series	154
	**Female Plugs for Self-Assembly** 0.14 … 1 (1.5) mm² (24 … 16 AWG)	2020 Series	156
	**1- and 2- Conductor Female Plugs with Locking Levers and Strain Relief Plates** 0.14 … 1 (1.5) mm² (24 … 16 AWG)	2020 Series	162
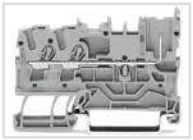	**X-COM®S-SYSTEM** **Through and Ground Conductor Carrier Terminal Blocks** 0.25 … 2.5 (4) mm² (22 … 12 AWG)	2022 Series	166
	**Double-Deck Carrier Terminal Blocks** 0.25 … 2.5 (4) mm² (22 … 12 AWG)	2022 Series	168
	**1-Conductor Female Plugs** 0.25 … 2.5 (4) mm² (22 … 12 AWG)	2022 Series	170
	**Female Plugs for Self-Assembly** 0.25 … 2.5 (4) mm² (22 … 12 AWG)	2022 Series	172
	**1-Conductor Female Plugs with Locking Levers and Strain Relief Plates** 0.25 … 2.5 (4) mm² (22 … 12 AWG)	2022 Series	176
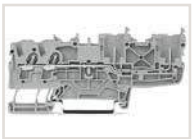	**X-COM®S-SYSTEM, for Ex Applications** **Through/Ground Conductor Carrier Terminal Blocks and Double-Deck Carrier Terminal Blocks** 0.25 … 2.5 (4) mm² (22 … 12 AWG)	2022 Series	178
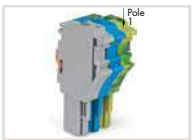	**1-Conductor Female Plugs** 0.25 … 2.5 (4) mm² (22 … 12 AWG)	2022 Series	182

2

PUSH-IN CAGE CLAMP®

X-COM®S-SYSTEM-MINI, 2020 Series
X-COM®S-SYSTEM, 2022 Series
Description and Installation

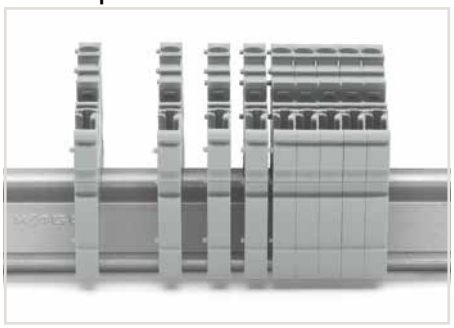

Snap individual carrier terminal blocks onto the carrier rail and slide together.



Open the assembly by laterally sliding a block via operating tool (3.5 x 0.5 mm blade).

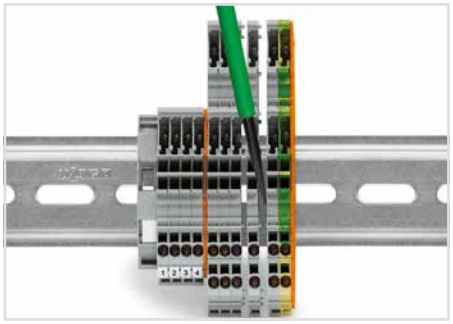

Separate terminal block assembly and slide individual terminal blocks laterally using an operating tool.

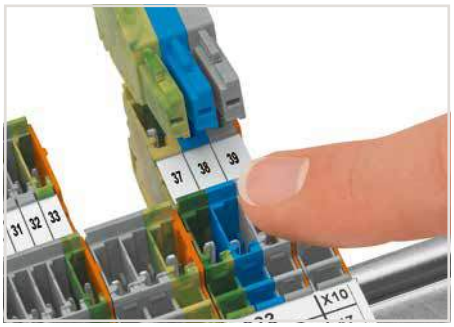

Carrier terminal blocks and female plugs are touch-proof.

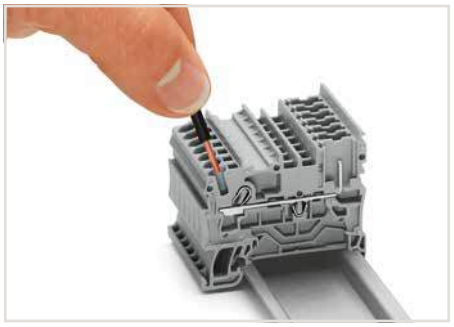

Push-in CAGE CLAMP® enables solid conductors and fine-stranded conductors with ferrules to be connected by simply pushing them into the unit.

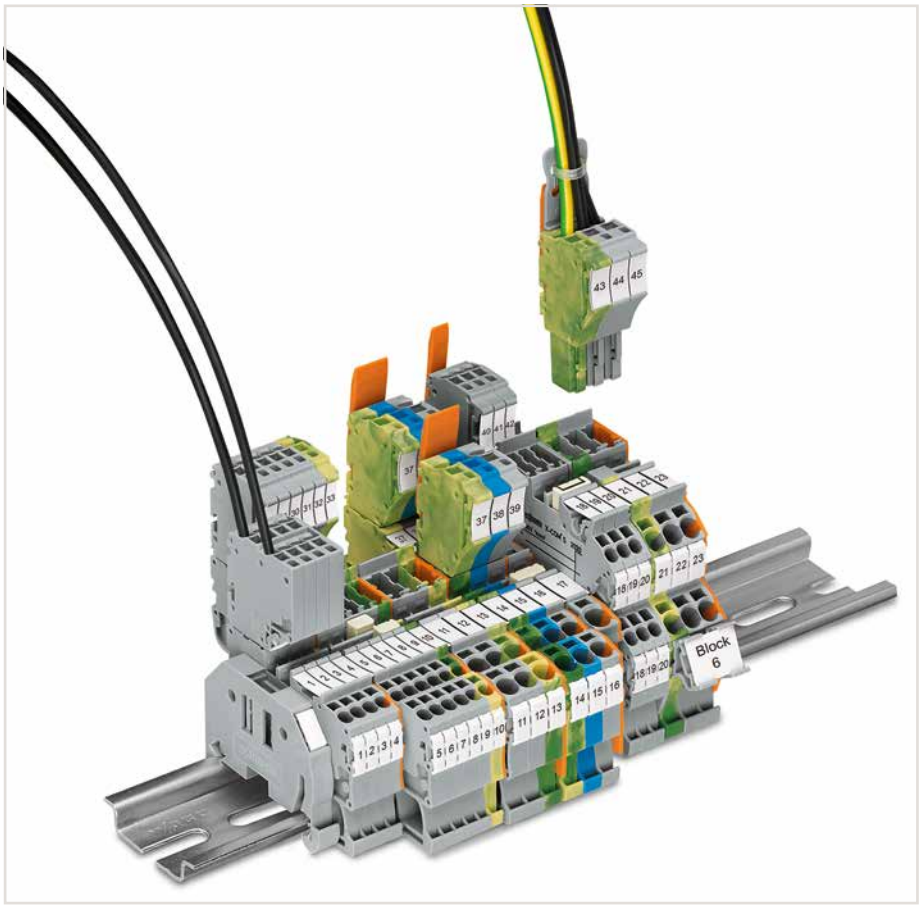

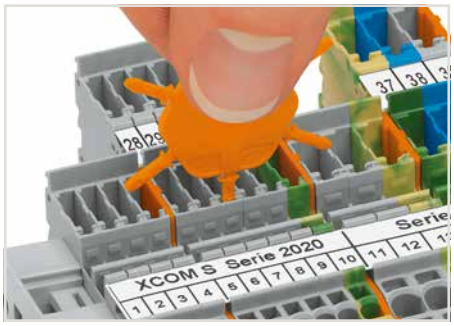

Insert coding pin into the corresponding slot and twist it off.



Coding a female plug: remove coding finger using a suitable tool.

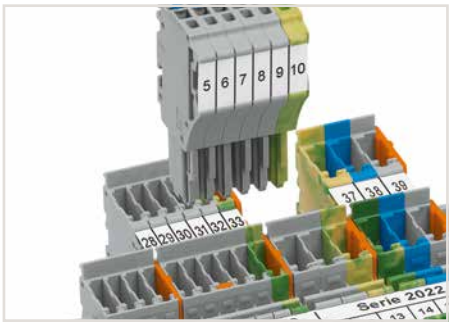

Insert coded female connector into X-COM®S-SYSTEM terminal block assembly.



Push-in CAGE CLAMP® terminates the following copper conductors:
solid



stranded



fine-stranded, also with tinned single strands

PUSH-IN CAGE CLAMP®

X-COM®S-SYSTEM-MINI, 2020 Series
X-COM®S-SYSTEM, 2022 Series
Installation

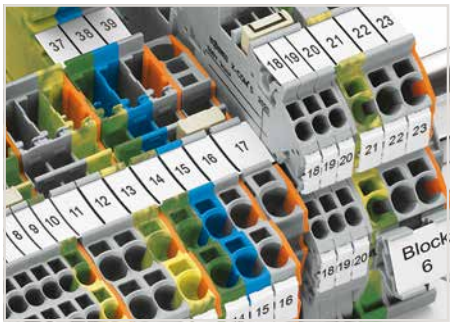

Commoning X-COM®S-SYSTEM Terminal Blocks using jumpers for TOPJOB® S Terminal Blocks. An end plate provides connection to TOPJOB® S Terminal Blocks. 2020 and 2022 Series Terminal Blocks are combinable. Jumper slots are on the same level for both series.

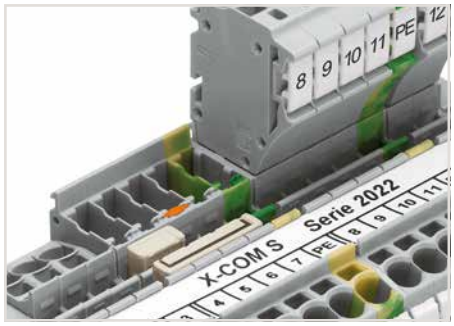

Pairing push-in comb style jumpers.

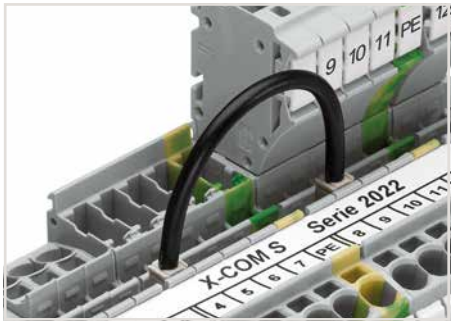

Commoning with push-in type wire jumper.

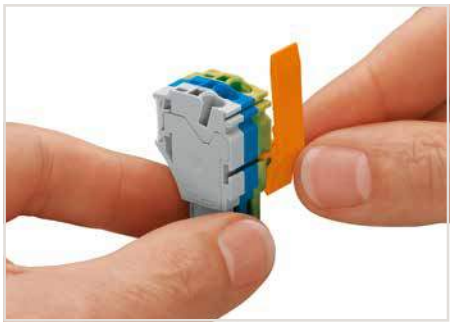

Slide the locking lever into position.

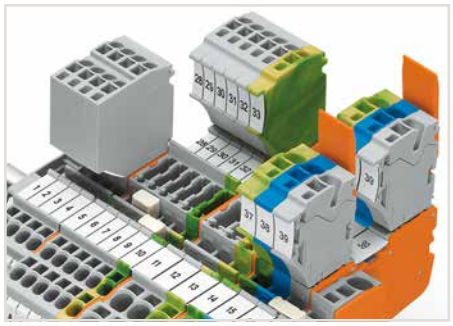

Female plugs can be individually locked.

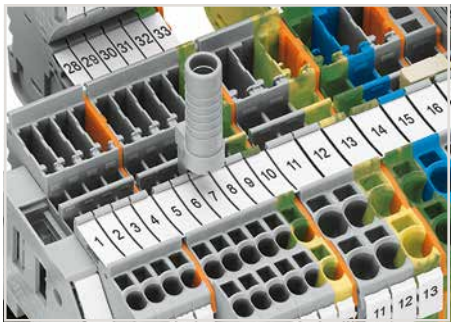

Test plug adapter (2009-174) for 4 mm test plugs or banana plugs – also suitable for X-COM®S-SYSTEM-MINI Terminal Blocks.

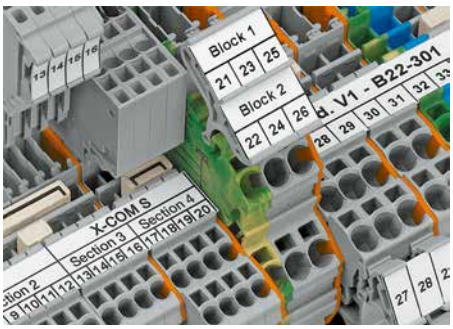

Clear marking via large marking area

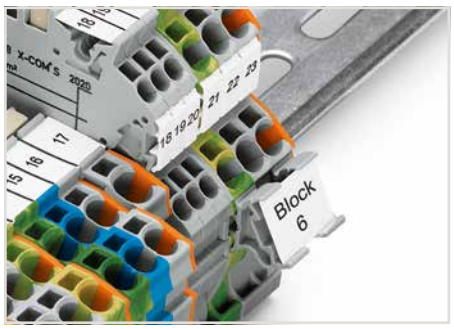

Marker carrier (2009-198)



fine-stranded, tip-bonded



fine-stranded, with ferrule (gastight crimped)



fine-stranded, with pin terminal (gastight crimped)

X-COM®S-SYSTEM-MINI – 1-Conductor/1-Pin, 2-Conductor/1-Pin and 2-Conductor/2-Pin Carrier Terminal Blocks

1 (1.5) mm², 2020 Series

2

0.14 … 1 (1.5) mm² ❶ 500 V/6 kV/3 ❷ I_N 13.5 A ❸	24 … 16 AWG 300 V, 10 A 300 V, 10 A	0.14 … 1 (1.5) mm² ❶ 500 V/6 kV/3 ❷ I_N 13.5 A ❸	24 … 16 AWG 300 V, 10 A 300 V, 10 A	0.14 … 1 (1.5) mm² ❶ 500 V/6 kV/3 ❷ I_N 13.5 A ❸	24 … 16 AWG 300 V, 10 A 300 V, 10 A
Terminal block width 3.5 mm / 0.138 inch 9 … 11 mm / 0.35 … 0.43 inch		Terminal block width 3.5 mm / 0.138 inch 9 … 11 mm / 0.35 … 0.43 inch		Terminal block width 3.5 mm / 0.138 inch 9 … 11 mm / 0.35 … 0.43 inch	

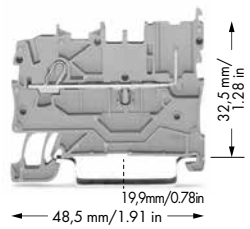

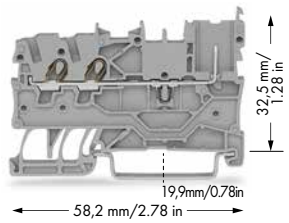

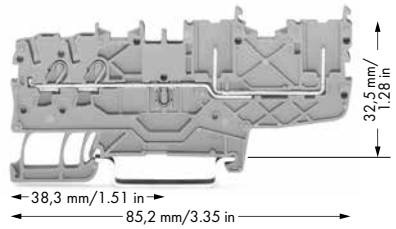

	Item No.	Pack. Unit
1-conductor/1-pin carrier terminal block		
gray	**2020-1201**	50
blue	**2020-1204**	50
1-conductor/1-pin ground carrier terminal block		
green-yellow	**2020-1207**	50

	Item No.	Pack. Unit
2-conductor/1-pin carrier terminal block		
gray	**2020-1301**	50
blue	**2020-1304**	50
2-conductor/1-pin ground carrier terminal block		
green-yellow	**2020-1307**	50

	Item No.	Pack. Unit
2-conductor/2-pin carrier terminal block		
gray	**2020-1401**	50
blue	**2020-1404**	50
2-conductor/2-pin ground carrier terminal block		
green-yellow	**2020-1407**	50

Item-Specific Accessories

End and intermediate plate, 1 mm thick



orange	**2020-1292**	100 (4x25)
gray	**2020-1291**	100 (4x25)

Item-Specific Accessories

End and intermediate plate, 1 mm thick



orange	**2020-1392**	100 (4x25)
gray	**2020-1391**	100 (4x25)

Item-Specific Accessories

End and intermediate plate, 1 mm thick



orange	**2020-1492**	100 (4x25)
gray	**2020-1491**	100 (4x25)

2020 Series Accessories

Appropriate marking systems: WMB/WMB Inline/Marking strips (see Section 13)

Push-in type jumper bar, insulated, I_N 14 A, light gray ❹



2-way	**2000-402**	200 (8x25)
3-way	**2000-403**	200 (8x25)
4-way	**2000-404**	200 (8x25)
5-way	**2000-405**	100 (4x25)
6-way	**2000-406**	100 (4x25)
7-way	**2000-407**	100 (4x25)
8-way	**2000-408**	100 (4x25)
9-way	**2000-409**	100 (4x25)
10-way	**2000-410**	100 (4x25)

Push-in type jumper bar, insulated, I_N 14 A, light gray



from 1 to 3	**2000-433**	200 (8x25)
from 1 to 4	**2000-434**	200 (8x25)
from 1 to 5	**2000-435**	100 (4x25)
from 1 to 6	**2000-436**	100 (4x25)
from 1 to 7	**2000-437**	100 (4x25)
from 1 to 8	**2000-438**	100 (4x25)
from 1 to 9	**2000-439**	100 (4x25)
from 1 to 10	**2000-440**	100 (4x25)

Delta jumper, insulated, I_N = I_N terminal block, light gray ❹



1-2 3-4 5-6	**2000-406/020-000**	100 (4x25)

Star point jumper, insulated, I_N = I_N terminal block, light ❹



gray		
1-3-5	**2000-405/011-000**	100 (4x25)

Push-in type wire jumper, insulated, wire size 0.75 mm², I_N 9 A ❹



L = 60 mm	**2009-402**	100 (10x10)
L = 110 mm	**2009-404**	100 (10x10)
L = 250 mm	**2009-406**	100 (10x10)

Protective warning marker, with black high-voltage symbol, for 5 terminal blocks



yellow	**2000-115**	100 (4x25)

Carrier with 6 coding pins, for coding female plugs



orange	**2020-100**	100 (4x25)

Test pin, 1 mm Ø



	859-500	1

Test plug adapter, for 4 mm Ø test plug



gray	**2009-174**	100 (4x25)

Banana plug, for 4 mm socket diameter, color mixed, 10 x ❹



orange, white, black, blue, yellow		
	215-111	50

Testing tap, for max. 2.5 mm²



gray	**2009-182**	100 (4x25)

1-conductor female plug



gray	**2020-102**	100

2-conductor female plug



gray	**2020-202**	100

Overview of certification organizations, see page 654

Note:
When used as intended, female plugs shall not be connected/disconnected when live or under load.

An appropriate end plate must be applied to the carrier terminal blocks after each female plug (2020 Series).

❶ Conductor range: 0.14 … 1.5 mm² “s + f-st”;
Push-in termination: 0.5 … 1.5 mm² “s”
and 0.5 … 0.75 mm²
“insulated ferrule, 10 mm”

❷ 500 V = rated voltage
6 kV = rated surge voltage
3 = pollution degree
(see Section 14)

❸ Current-carrying capacity curves upon request

❹ See application notes for:
Colored push-in type jumper bar, page 134
Star point jumper, page 135
Delta jumper, page 135
Banana plug, page 330

Accessories

WMB Inline, plain, 2,300 WMB markers (3.5 mm) per reel			
	white	**2009-113**	1
WMB Multi marking system, white, 10 strips with 10 markers per card, for 3.5 mm terminal block width			
	plain	**793-3501**	5
Marking strip, plain, 11 mm wide, 50 m reel			
	white	**2009-110**	1
Screwless end stop, for DIN-35 rail, 6 mm wide			
	gray	**249-116**	100 (4x25)
Screwless end stop, for DIN-35 rail, 10 mm wide			
	gray	**249-117**	50 (2x25)

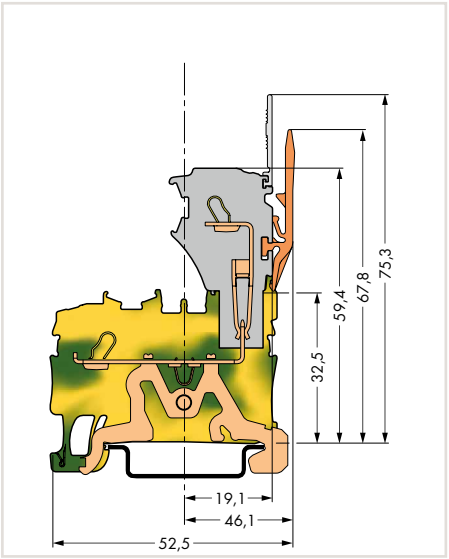

Ground carrier terminal block

X-COM®S-SYSTEM-MINI
1-Conductor/1-Pin Double-Deck Carrier Terminal Blocks
1 (1.5) mm², 2020 Series

2

0.14 … 1 (1.5) mm² ❶ 500 V/6 kV/3 ❷ I_N 13.5 A ❸	24 … 16 AWG 300 V, 10 A 300 V, 10 A	
Terminal block width 3.5 mm / 0.138 inch 9 … 11 mm / 0.35 … 0.43 inch		

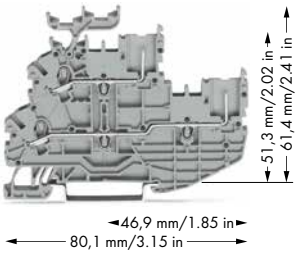

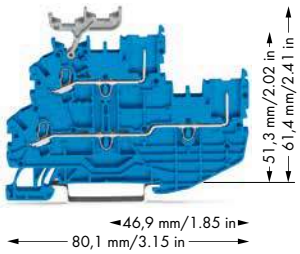

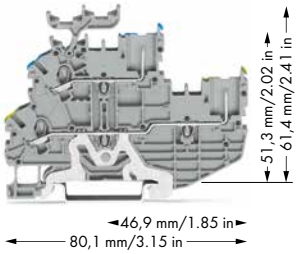

	Item No.	Pack. Unit
1-conductor/1-pin double-deck carrier terminal block, through/through terminal block, with marker carrier, gray housing		
L/L	**2020-2231**	50
N/L	**2020-2232**	50
L/N	**2020-2233**	50
1-conductor/1-pin double-deck carrier terminal block, through/through terminal block, without marker carrier, gray housing		
L/L	**2020-2201**	50
N/L	**2020-2202**	50
L/N	**2020-2203**	50

	Item No.	Pack. Unit
1-conductor/1-pin double-deck carrier terminal block, through/through terminal block, with marker carrier, blue housing		
N/N	**2020-2234**	50
1-conductor/1-pin double-deck carrier terminal block, through/through terminal block, without marker carrier, blue housing		
N/N	**2020-2204**	50

	Item No.	Pack. Unit
1-conductor/1-pin double-deck carrier terminal block, ground conductor/through terminal block, with marker carrier, gray housing		
PE/N	**2020-2247**	50
PE/L	**2020-2257**	50
1-conductor/1-pin double-deck carrier terminal block, ground conductor/through terminal block, without marker carrier, gray housing		
PE/N	**2020-2217**	50
PE/L	**2020-2227**	50

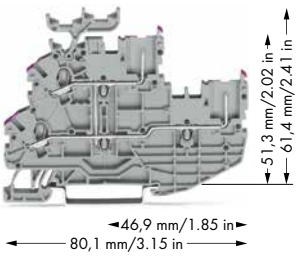

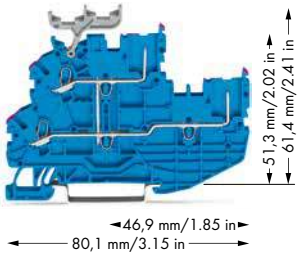

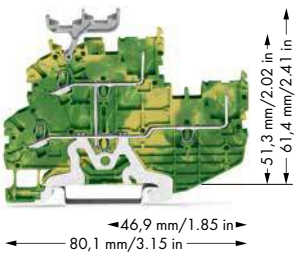

	Item No.	Pack. Unit
2-conductor/2-pin double-deck carrier terminal block, 2-conductor/2-pin through terminal block, with marker carrier, internally commoned, violet conductor entry, gray housing		
L	**2020-2238**	50
2-conductor/2-pin double-deck carrier terminal block, 2-conductor/2-pin through terminal block, without marker carrier, internally commoned, violet conductor entry, gray housing		
L	**2020-2208**	50

	Item No.	Pack. Unit
2-conductor/2-pin double-deck carrier terminal block, 2-conductor/2-pin through terminal block, with marker carrier, internally commoned, violet conductor entry, blue housing		
N	**2020-2239**	50
2-conductor/2-pin double-deck carrier terminal block, 2-conductor/2-pin through terminal block, without marker carrier, internally commoned, violet conductor entry, blue housing		
N	**2020-2209**	50

	Item No.	Pack. Unit
2-conductor/2-pin double-deck carrier terminal block, 2-conductor/2-pin ground conductor terminal block, with marker carrier, internally commoned, green-yellow housing		
PE	**2020-2237**	50
2-conductor/2-pin double-deck carrier terminal block, 2-conductor/2-pin ground conductor terminal block, without marker carrier, internally commoned, green-yellow housing		
PE	**2020-2207**	50

Overview of certification organizations, see page 654

Note:
When used as intended, female plugs shall not be connected/disconnected when live or under load.

An appropriate end plate must be applied to the carrier terminal blocks after each female plug (2020 Series).

❶ Conductor range: 0.14 … 1.5 mm² "s + f-st"; Push-in termination: 0.5 … 1.5 mm² "s" and 0.5 … 0.75 mm² "insulated ferrule, 10 mm"

❷ 500 V = rated voltage
6 kV = rated surge voltage
3 = pollution degree
(see Section 14)

❸ Current-carrying capacity curves upon request

❹ See application notes for:
Colored push-in type jumper bar, page 134
Vertical jumper, page 139
Banana plug, page 330

2020 Series Accessories

Appropriate marking systems: WMB/WMB Inline/Marking strips (see Section 13)

End and intermediate plate, 1 mm thick



orange	**2020-2292**	100 (4x25)
gray	**2020-2291**	100 (4x25)

Push-in type jumper bar, insulated, I_N 14 A, light gray ❹



2-way	**2000-402**	200 (8x25)
3-way	**2000-403**	200 (8x25)
4-way	**2000-404**	200 (8x25)
5-way	**2000-405**	100 (4x25)
6-way	**2000-406**	100 (4x25)
7-way	**2000-407**	100 (4x25)
8-way	**2000-408**	100 (4x25)
9-way	**2000-409**	100 (4x25)
10-way	**2000-410**	100 (4x25)

Push-in type jumper bar, insulated, I_N 14 A, light gray



from 1 to 3	**2000-433**	200 (8x25)
from 1 to 4	**2000-434**	200 (8x25)
from 1 to 5	**2000-435**	100 (4x25)
from 1 to 6	**2000-436**	100 (4x25)
from 1 to 7	**2000-437**	100 (4x25)
from 1 to 8	**2000-438**	100 (4x25)
from 1 to 9	**2000-439**	100 (4x25)
from 1 to 10	**2000-440**	100 (4x25)

Double-deck vertical jumper, insulated, I_N 13.5 A ❹

light gray	**2000-492**	100 (4x25)

Protective warning marker, with black high-voltage symbol, for 5 terminal blocks



yellow	**2000-115**	100 (4x25)

Carrier with 6 coding pins, for coding female plugs



orange	**2020-100**	100 (4x25)

Test pin, 1 mm Ø



	859-500	1

1-conductor female plug



gray	**2020-102**	100

2-conductor female plug



gray	**2020-202**	100

Test plug adapter, for 4 mm Ø test plug



gray	**2009-174**	100 (4x25)

Banana plug, for 4 mm socket diameter, color mixed, 10 x ❹



orange, white, black, blue, yellow	**215-111**	50

Testing tap, for max. 2.5 mm²



gray	**2009-182**	100 (4x25)

Test plug, with 500 mm cable, 2 mm Ø, max. 42 V



red	**210-136**	50

Test plug, with 500 mm cable, 2.3 mm Ø, max. 42 V



yellow	**210-137**	50

Double-deck marker carrier, pivoting



gray	**2000-121**	50 (2x25)

WMB Inline, plain, 2,300 WMB markers (3.5 mm) per reel



white	**2009-113**	1

WMB Multi marking system, white, 10 strips with 10 markers per card, for 3.5 mm terminal block width

plain	**793-3501**	5

Marking strip, plain, 11 mm wide, 50 m reel



white	**2009-110**	1



Size comparison:
Double-deck carrier terminal blocks with 3.5 mm and 5.2 mm terminal block width

PUSH-IN CAGE CLAMP®

X-COM®S-SYSTEM-MINI
1- and 2-Conductor Female Plugs
1 (1.5) mm², 2020 Series

2

0.14 … 1 (1.5) mm² ❶	24 … 16 AWG
500 V/6 kV/3 ❷	300 V, 10 A
I_N 13.5 A ❸	300 V, 10 A
Module width 3.5 mm / 0.138 inch	
9 … 11 mm / 0.35 … 0.43 inch	

0.14 … 1 (1.5) mm² ❶	24 … 16 AWG
500 V/6 kV/3 ❷	300 V, 10 A
I_N 13.5 A ❸	300 V, 10 A
Module width 3.5 mm / 0.138 inch	
9 … 11 mm / 0.35 … 0.43 inch	





❶ Conductor range: 0.14 … 1.5 mm² "s + f-st"; Push-in termination: 0.5 … 1.5 mm² "s" and 0.5 … 0.75 mm² "insulated ferrule, 10 mm"

❷ 500 V = rated voltage
6 kV = rated surge voltage
3 = pollution degree
(see Section 14)

❸ Current-carrying capacity curves upon request

❹ Item-no. suffix
blue **…/000-006**
green-yellow **…/000-016**

Pole No.	Item No.	Pack. Unit
1-conductor female plug, for insertion into carrier terminal blocks, with coding fingers, gray		
According to EN 61984, connectors without current interrupting capacity shall not be mated and unmated when live or under load.		
2	**2020-102**	100
3	**2020-103**	50
4	**2020-104**	50
5	**2020-105**	50
6	**2020-106**	50
7	**2020-107**	25
8	**2020-108**	25
9	**2020-109**	25
10	**2020-110**	25
11	**2020-111**	20
12	**2020-112**	20
13	**2020-113**	10
14	**2020-114**	10
15	**2020-115**	10
Notice:		
An end plate must be applied to the carrier terminal blocks after each female plug.		

Pole No.	Item No.	Pack. Unit
2-conductor female plug, for insertion into carrier terminal blocks, with coding fingers, gray		
According to EN 61984, connectors without current interrupting capacity shall not be mated and unmated when live or under load.		
2	**2020-202**	100
3	**2020-203**	50
4	**2020-204**	50
5	**2020-205**	50
6	**2020-206**	25
7	**2020-207**	25
8	**2020-208**	25
9	**2020-209**	25
10	**2020-210**	25
11	**2020-211**	20
12	**2020-212**	20
13	**2020-213**	10
14	**2020-214**	10
15	**2020-215**	10
Notice:		
An end plate must be applied to the carrier terminal blocks after each female plug.		



X-COM®S-SYSTEM-MINI terminal block assembly



X-COM®S-SYSTEM-MINI terminal block assembly

Accessories Female Plugs

Appropriate marking systems: WMB/WMB Inline/Marking strips (see Section 13)

Locking lever, 4.8 mm wide			
orange	**2022-142**	100 (4x25)	
gray	**2022-141**	100 (4x25)	

Locking lever, 9.6 mm wide			
orange	**2022-152**	100 (4x25)	
gray	**2022-151**	100 (4x25)	

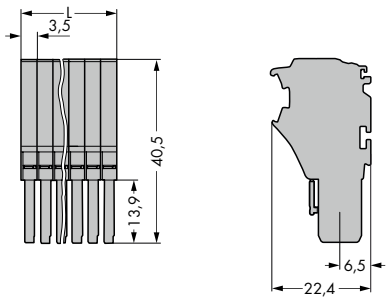

L = (pole no. x module width) + 0.7 mm

Dimensions in mm

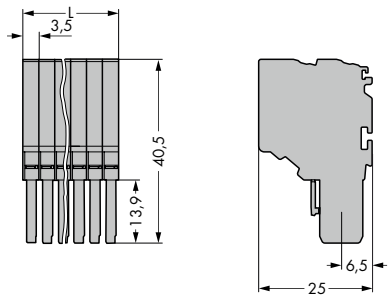

L = (pole no. x module width) + 0.7 mm

Dimensions in mm

PUSH-IN CAGE CLAMP®

X-COM®S-SYSTEM-MINI
Carrier Terminal Blocks and 1-/2-Conductor Female Plugs
Assembly Types



1-conductor female plug
Carrier terminal blocks can be commoned via 2000 Series Push-In Type Jumper Bars and tested via 859-500 Test Pin.

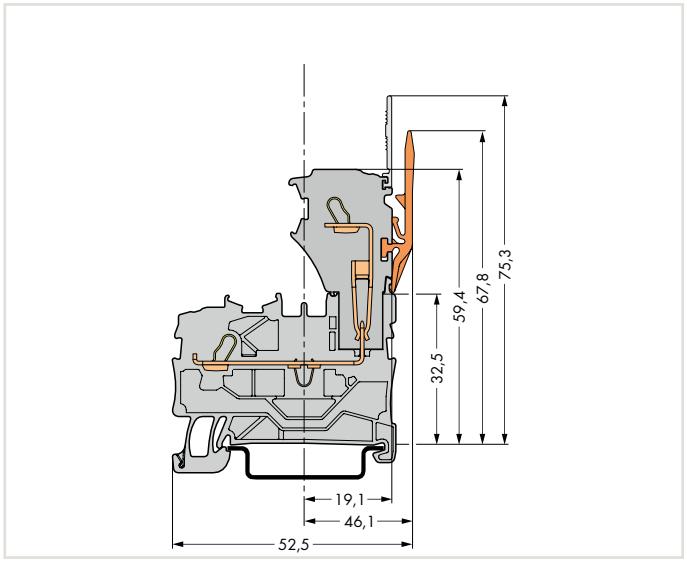

Carrier terminal block

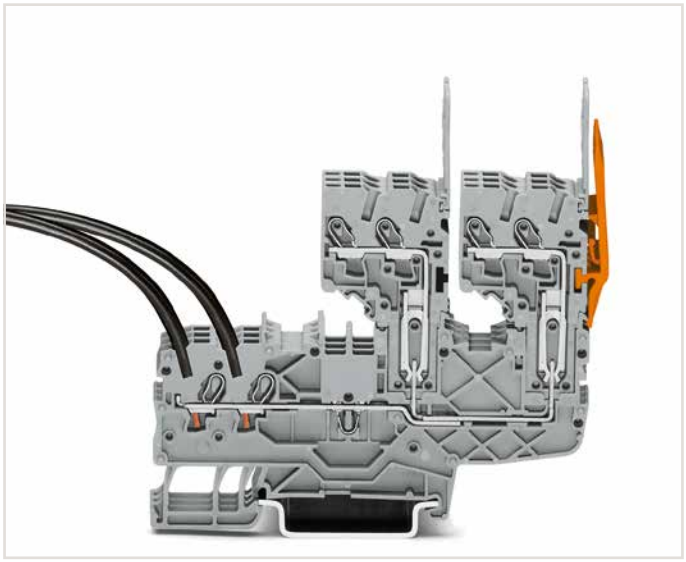

2-conductor female connector
Carrier terminal blocks can be commoned via 2000 Series Push-In Type Jumper Bars and tested via 859-500 Test Pin.

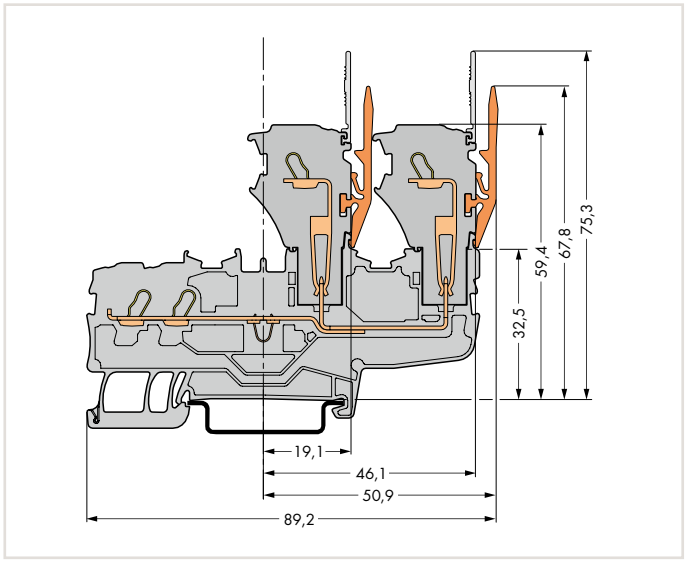

Carrier terminal block

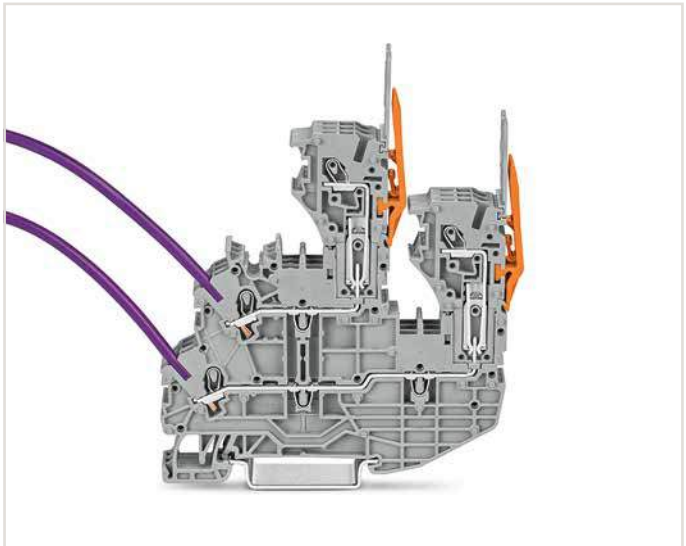

1-conductor female plug
Double-deck carrier terminal blocks can be commoned via 2000 Series Push-In Type Jumper Bars and tested via 859-500 Test Pin.

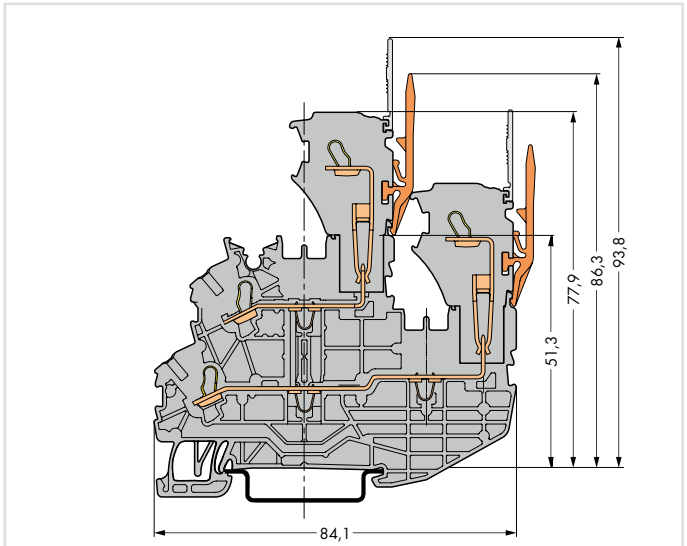

Double-deck carrier terminal block

X-COM®S-SYSTEM-MINI
Female Plugs for Self-Assembly
1 (1.5) mm², 2020 Series

2

0.14 … 1 (1.5) mm² ❶	24 … 16 AWG
500 V/6 kV/3 ❷	300 V, 10 A
I_N 13.5 A ❸	300 V, 10 A
Terminal block width 3.5 mm / 0.138 inch	
9 … 11 mm / 0.35 … 0.43 inch	

0.14 … 1 (1.5) mm² ❶	24 … 16 AWG
500 V/6 kV/3 ❷	300 V, 10 A
I_N 13.5 A ❸	300 V, 10 A
Terminal block width 3.5 mm / 0.138 inch	
9 … 11 mm / 0.35 … 0.43 inch	





	Item No.	Pack. Unit
1-conductor end module, with coding fingers		
gray	**2020-181**	250
blue	**2020-184**	250
green-yellow	**2020-187**	250
1-conductor base module with end plate, with coding fingers		
gray	**2020-161**	250
blue	**2020-164**	250
green-yellow	**2020-167**	250

	Item No.	Pack. Unit
2-conductor end module, with coding fingers		
gray	**2020-281**	250
blue	**2020-284**	250
green-yellow	**2020-287**	250
2-conductor base module with end plate, with coding fingers		
gray	**2020-261**	250
blue	**2020-264**	250
green-yellow	**2020-267**	250

Accessories Female Plugs

Appropriate marking systems: WMB/WMB Inline/Marking strips (see Section 13)

Protective warning marker, with black high-voltage symbol, for 5 terminal blocks			
	yellow	**2000-115**	100 (4x25)
Locking lever, 9.6 mm wide			
	orange	**2022-152**	100 (4x25)
	gray	**2022-151**	100 (4x25)
Locking lever, 4.8 mm wide			
	orange	**2022-142**	100 (4x25)
	gray	**2022-141**	100 (4x25)
Strain relief plate, gray			
	35 mm wide	**734-326**	100 (4x25)
	6 mm wide	**734-327**	100 (4x25)
	12.5 mm wide	**734-328**	100 (4x25)
	25 mm wide	**734-329**	100 (4x25)
WMB Inline, plain, 2,300 WMB markers (3.5 mm) per reel			
	white	**2009-113**	1
WMB Multi marking system, white, 10 strips with 10 markers per card, for 3.5 mm terminal block width			
	plain	**793-3501**	5
Marking strip, plain, 11 mm wide, 50 m reel			
	white	**2009-110**	1

Overview of certification organizations, see page 654

Customizing Modular Female Plugs
WAGO's modular X-COM®S-SYSTEM female plugs can be customized for applications requiring varying numbers of poles (e.g., when designing prototypes).

Modules and Pole Numbers
A customized X-COM®S-SYSTEM-MINI female plug consists of:
- One base module with end plate
- Up to 14 end modules

Intended Use
According to EN 61984, pluggable connectors without current interrupting capacity shall not be mated and unmated when live or under load.

Assembly
The appropriate mounting tool shall be used in order to guarantee that the individual modules are properly attached to each other without damaging the locking latches.

❶ Conductor range: 0.14 … 1.5 mm² "s + f-st"; Push-in termination: 0.5 … 1.5 mm² "s" and 0.5 … 0.75 mm² "insulated ferrule, 10 mm"

❷ 500 V = rated voltage
6 kV = rated surge voltage
3 = pollution degree
(see Section 14)

❸ Current-carrying capacity curves upon request


End module

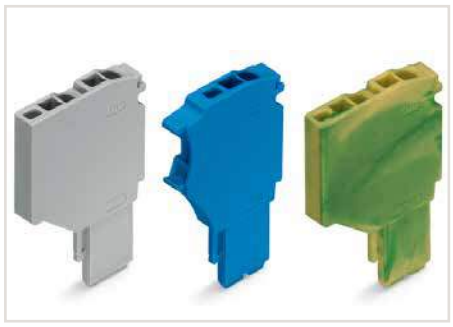
Base module

Example: 5-Pole, 1-Conductor Female Plug

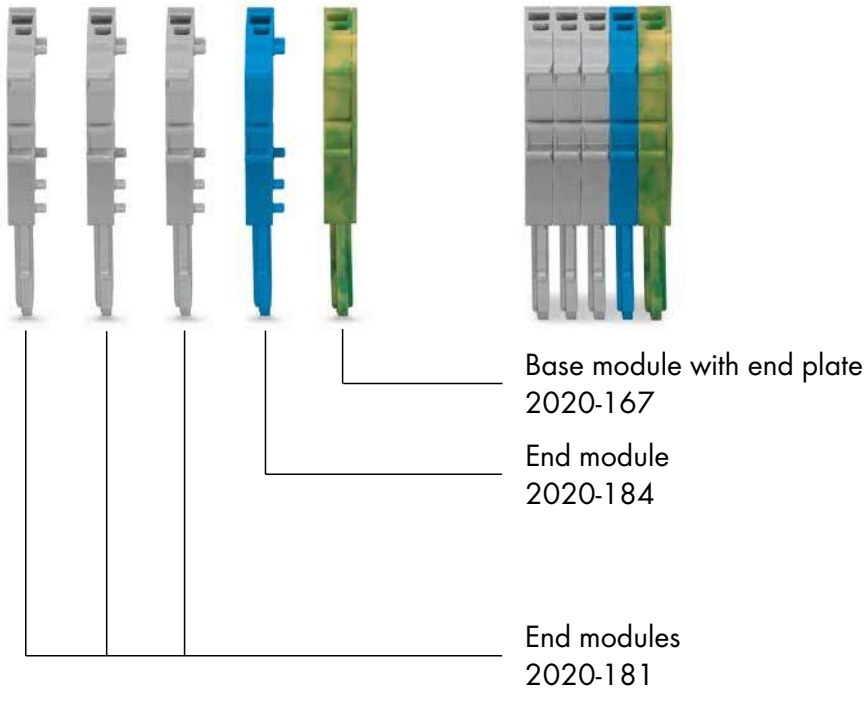

X-COM®S-SYSTEM-MINI
Pre-Assembled 1-Conductor Female Plugs
1 (1.5) mm², 2020 Series

2

0.14 … 1 (1.5) mm² ❶	24 … 16 AWG	
500 V/6 kV/3 ❷	300 V, 10 A	
I_N 13.5 A ❸	300 V, 10 A	
Module width 3.5 mm / 0.138 inch		
9 … 11 mm / 0.35 … 0.43 inch		

0.14 … 1 (1.5) mm² ❶	24 … 16 AWG	
500 V/6 kV/3 ❷	300 V, 10 A	
I_N 13.5 A ❸	300 V, 10 A	
Module width 3.5 mm / 0.138 inch		
9 … 11 mm / 0.35 … 0.43 inch		

0.14 … 1 (1.5) mm² ❶	24 … 16 AWG	
500 V/6 kV/3 ❷	300 V, 10 A	
I_N 13.5 A ❸	300 V, 10 A	
Module width 3.5 mm / 0.138 inch		
9 … 11 mm / 0.35 … 0.43 inch		





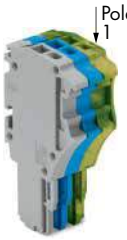

Pole No.	Item No.	Pack. Unit
1-conductor female plug, with ground base module (green-yellow), for insertion into carrier terminal blocks, with coding fingers		
3	**2020-103/000-036**	50
4	**2020-104/000-036**	50
5	**2020-105/000-036**	50
6	**2020-106/000-036**	50
7	**2020-107/000-036**	25
8	**2020-108/000-036**	25
9	**2020-109/000-036**	25
10	**2020-110/000-036**	25
11	**2020-111/000-036**	20
12	**2020-112/000-036**	20
13	**2020-113/000-036**	10
14	**2020-114/000-036**	10
15	**2020-115/000-036**	10

Pole No.	Item No.	Pack. Unit
1-conductor female plug, with ground end module (green-yellow), for insertion into carrier terminal blocks, with coding fingers		
3	**2020-103/000-037**	50
4	**2020-104/000-037**	50
5	**2020-105/000-037**	50
6	**2020-106/000-037**	50
7	**2020-107/000-037**	25
8	**2020-108/000-037**	25
9	**2020-109/000-037**	25
10	**2020-110/000-037**	25
11	**2020-111/000-037**	20
12	**2020-112/000-037**	20
13	**2020-113/000-037**	10
14	**2020-114/000-037**	10
15	**2020-115/000-037**	10

Pole No.	Item No.	Pack. Unit
1-conductor female plug, with ground base module (green-yellow), for insertion into carrier terminal blocks, with coding fingers		
3	**2020-103/000-038**	50
4	**2020-104/000-038**	50
5	**2020-105/000-038**	50
6	**2020-106/000-038**	50
7	**2020-107/000-038**	25
8	**2020-108/000-038**	25
9	**2020-109/000-038**	25
10	**2020-110/000-038**	25
11	**2020-111/000-038**	20
12	**2020-112/000-038**	20
13	**2020-113/000-038**	10
14	**2020-114/000-038**	10
15	**2020-115/000-038**	10

Accessories Female Plugs

Appropriate marking systems: WMB/WMB Inline/Marking strips
(see Section 13)

Protective warning marker, with black high-voltage symbol, for 5 terminal blocks



yellow	**2000-115**	100 (4x25)

Locking lever, 9.6 mm wide



orange	**2022-152**	100 (4x25)
gray	**2022-151**	100 (4x25)

Locking lever, 4.8 mm wide



orange	**2022-142**	100 (4x25)
gray	**2022-141**	100 (4x25)

Strain relief plate, gray



35 mm wide	**734-326**	100 (4x25)
6 mm wide	**734-327**	100 (4x25)
12.5 mm wide	**734-328**	100 (4x25)
25 mm wide	**734-329**	100 (4x25)

WMB Inline, plain, 2,300 WMB markers (3.5 mm) per reel



white	**2009-113**	1

WMB Multi marking system, white, 10 strips with 10 markers per card, for 3.5 mm terminal block width

plain	**793-3501**	5

Marking strip, plain, 11 mm wide, 50 m reel



white	**2009-110**	1

Overview of certification organizations, see page 654

0.14 … 1 (1.5) mm² ❶	24 … 16 AWG
500 V/6 kV/3 ❷	300 V, 10 A
I_N 13.5 A ❸	300 V, 10 A

Module width 3.5 mm / 0.138 inch

9 … 11 mm / 0.35 … 0.43 inch



❶ Conductor range: 0.14 … 1.5 mm² "s + f-st"; Push-in termination: 0.5 … 1.5 mm² "s" and 0.5 … 0.75 mm² "insulated ferrule, 10 mm"

❷ 500 V = rated voltage
6 kV = rated surge voltage
3 = pollution degree
(see Section 14)

❸ Current-carrying capacity curves upon request

Pole No.	Item No.	Pack. Unit
1-conductor female plug, with ground end module (green-yellow), for insertion into carrier terminal blocks, with coding fingers		
3	**2020-103/000-039**	50
4	**2020-104/000-039**	50
5	**2020-105/000-039**	50
6	**2020-106/000-039**	50
7	**2020-107/000-039**	25
8	**2020-108/000-039**	25
9	**2020-109/000-039**	25
10	**2020-110/000-039**	25
11	**2020-111/000-039**	20
12	**2020-112/000-039**	20
13	**2020-113/000-039**	10
14	**2020-114/000-039**	10
15	**2020-115/000-039**	10

X-COM®S-SYSTEM-MINI
Pre-Assembled 2-Conductor Female Plugs
1 (1.5) mm², 2020 Series

2

0.14 … 1 (1.5) mm² ❶	24 … 16 AWG	
500 V/6 kV/3 ❷	300 V, 10 A	
I_N 13.5 A ❸	300 V, 10 A	
Module width 3.5 mm / 0.138 inch		
9 … 11 mm / 0.35 … 0.43 inch		

0.14 … 1 (1.5) mm² ❶	24 … 16 AWG	
500 V/6 kV/3 ❷	300 V, 10 A	
I_N 13.5 A ❸	300 V, 10 A	
Module width 3.5 mm / 0.138 inch		
9 … 11 mm / 0.35 … 0.43 inch		

0.14 … 1 (1.5) mm² ❶	24 … 16 AWG	
500 V/6 kV/3 ❷	300 V, 10 A	
I_N 13.5 A ❸	300 V, 10 A	
Module width 3.5 mm / 0.138 inch		
9 … 11 mm / 0.35 … 0.43 inch		







Pole No.	Item No.	Pack. Unit
2-conductor female plug, with ground base module (green-yellow), for insertion into carrier terminal blocks, with coding fingers		
3	**2020-203/000-036**	50
4	**2020-204/000-036**	50
5	**2020-205/000-036**	50
6	**2020-206/000-036**	25
7	**2020-207/000-036**	25
8	**2020-208/000-036**	25
9	**2020-209/000-036**	25
10	**2020-210/000-036**	25
11	**2020-211/000-036**	20
12	**2020-212/000-036**	20
13	**2020-213/000-036**	10
14	**2020-214/000-036**	10
15	**2020-215/000-036**	10

Pole No.	Item No.	Pack. Unit
2-conductor female plug, with ground end module (green-yellow), for insertion into carrier terminal blocks, with coding fingers		
3	**2020-203/000-037**	50
4	**2020-204/000-037**	50
5	**2020-205/000-037**	50
6	**2020-206/000-037**	25
7	**2020-207/000-037**	25
8	**2020-208/000-037**	25
9	**2020-209/000-037**	25
10	**2020-210/000-037**	25
11	**2020-211/000-037**	20
12	**2020-212/000-037**	20
13	**2020-213/000-037**	10
14	**2020-214/000-037**	10
15	**2020-215/000-037**	10

Pole No.	Item No.	Pack. Unit
2-conductor female plug, with ground base module (green-yellow), for insertion into carrier terminal blocks, with coding fingers		
3	**2020-203/000-038**	50
4	**2020-204/000-038**	50
5	**2020-205/000-038**	50
6	**2020-206/000-038**	25
7	**2020-207/000-038**	25
8	**2020-208/000-038**	25
9	**2020-209/000-038**	25
10	**2020-210/000-038**	25
11	**2020-211/000-038**	20
12	**2020-212/000-038**	20
13	**2020-213/000-038**	10
14	**2020-214/000-038**	10
15	**2020-215/000-038**	10

Accessories Female Plugs

Appropriate marking systems: WMB/WMB Inline/Marking strips (see Section 13)

Protective warning marker, with black high-voltage symbol, for 5 terminal blocks



yellow	**2000-115**	100 (4x25)

Locking lever, 9.6 mm wide



orange	**2022-152**	100 (4x25)
gray	**2022-151**	100 (4x25)

Locking lever, 4.8 mm wide



orange	**2022-142**	100 (4x25)
gray	**2022-141**	100 (4x25)

Strain relief plate, gray



35 mm wide	**734-326**	100 (4x25)
6 mm wide	**734-327**	100 (4x25)
12.5 mm wide	**734-328**	100 (4x25)
25 mm wide	**734-329**	100 (4x25)

WMB Inline, plain, 2,300 WMB markers (3.5 mm) per reel



white	**2009-113**	1

WMB Multi marking system, white, 10 strips with 10 markers per card, for 3.5 mm terminal block width

plain	**793-3501**	5

Marking strip, plain, 11 mm wide, 50 m reel



white	**2009-110**	1

Overview of certification organizations, see page 654

0.14 … 1 (1.5) mm² ❶	24 … 16 AWG
500 V/6 kV/3 ❷	300 V, 10 A
I_N 13.5 A ❸	300 V, 10 A

Module width 3.5 mm / 0.138 inch

9 … 11 mm / 0.35 … 0.43 inch



Pole No.	Item No.	Pack. Unit
2-conductor female plug, with ground end module (green-yellow), for insertion into carrier terminal blocks, with coding fingers		
3	**2020-203/000-039**	50
4	**2020-204/000-039**	50
5	**2020-205/000-039**	50
6	**2020-206/000-039**	25
7	**2020-207/000-039**	25
8	**2020-208/000-039**	25
9	**2020-209/000-039**	25
10	**2020-210/000-039**	25
11	**2020-211/000-039**	20
12	**2020-212/000-039**	20
13	**2020-213/000-039**	10
14	**2020-214/000-039**	10
15	**2020-215/000-039**	10

❶ Conductor range: 0.14 … 1.5 mm² "s + f-st"; Push-in termination: 0.5 … 1.5 mm² "s" and 0.5 … 0.75 mm² "insulated ferrule, 10 mm"

❷ 500 V = rated voltage
6 kV = rated surge voltage
3 = pollution degree
(see Section 14)

❸ Current-carrying capacity curves upon request

X-COM®S-SYSTEM-MINI
1-Conductor Female Plugs with Locking Levers and Strain Relief Plates
1 (1.5) mm², 2020 Series

2

0.14 … 1 (1.5) mm² ❶	24 … 16 AWG	
500 V/6 kV/3 ❷	300 V, 10 A	
I_N 13.5 A ❸	300 V, 10 A	
Module width 3.5 mm / 0.138 inch		
9 … 11 mm / 0.35 … 0.43 inch		

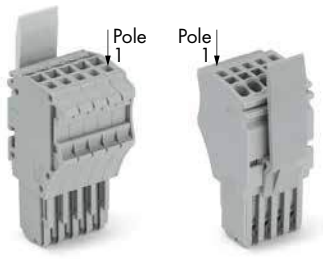

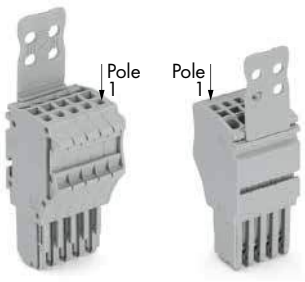

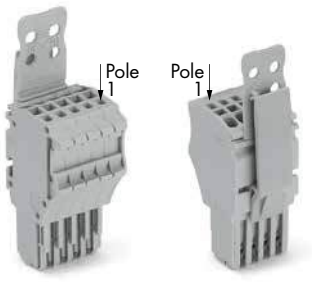

Pole No.	Item No.	Pack. Unit
1-conductor female plug, with locking lever, for insertion into carrier terminal blocks, with coding fingers, gray		
According to EN 61984, connectors without current interrupting capacity shall not be mated and unmated when live or under load.		
2	**2020-102/122-000**	100
3	**2020-103/122-000**	50
4	**2020-104/124-000**	50
5	**2020-105/124-000**	50
6	**2020-106/124-000**	25
7	**2020-107/124-000**	25
8	**2020-108/124-000**	25
9	**2020-109/124-000**	25
10	**2020-110/125-000**	25
11	**2020-111/125-000**	20
12	**2020-112/125-000**	20
13	**2020-113/125-000**	10
14	**2020-114/125-000**	10
15	**2020-115/125-000**	10

Pole No.	Item No.	Pack. Unit
1-conductor female plug, with strain relief plate, for insertion into carrier terminal blocks, with coding fingers, gray		
According to EN 61984, connectors without current interrupting capacity shall not be mated and unmated when live or under load.		
2	**2020-102/132-000**	100
3	**2020-103/132-000**	50
4	**2020-104/133-000**	50
5	**2020-105/133-000**	50
6	**2020-106/133-000**	25
7	**2020-107/134-000**	25
8	**2020-108/134-000**	25
9	**2020-109/134-000**	25
10	**2020-110/135-000**	25
11	**2020-111/135-000**	20
12	**2020-112/135-000**	20
13	**2020-113/135-000**	10
14	**2020-114/135-000**	10
15	**2020-115/135-000**	10

Pole No.	Item No.	Pack. Unit
1-conductor female plug, with strain relief plate and locking lever, for insertion into carrier terminal blocks, with coding fingers, gray		
According to EN 61984, connectors without current interrupting capacity shall not be mated and unmated when live or under load.		
2	**2020-102/142-000**	100
3	**2020-103/142-000**	50
4	**2020-104/143-000**	50
5	**2020-105/143-000**	50
6	**2020-106/143-000**	25
7	**2020-107/144-000**	25
8	**2020-108/144-000**	25
9	**2020-109/144-000**	25
10	**2020-110/145-000**	25
11	**2020-111/145-000**	20
12	**2020-112/145-000**	20
13	**2020-113/145-000**	10
14	**2020-114/145-000**	10
15	**2020-115/145-000**	10

Accessories Female Plugs

Appropriate marking systems: WMB/WMB Inline/Marking strips (see Section 13)

Protective warning marker, with black high-voltage symbol, for 5 terminal blocks



yellow	**2000-115**	100 (4x25)

Locking lever, 9.6 mm wide



orange	**2022-152**	100 (4x25)
gray	**2022-151**	100 (4x25)

Locking lever, 4.8 mm wide



orange	**2022-142**	100 (4x25)
gray	**2022-141**	100 (4x25)

Strain relief plate, gray



35 mm wide	**734-326**	100 (4x25)
6 mm wide	**734-327**	100 (4x25)
12.5 mm wide	**734-328**	100 (4x25)
25 mm wide	**734-329**	100 (4x25)

WMB Inline, plain, 2,300 WMB markers (3.5 mm) per reel



white	**2009-113**	1

WMB Multi marking system, white, 10 strips with 10 markers per card, for 3.5 mm terminal block width

plain	**793-3501**	5

Marking strip, plain, 11 mm wide, 50 m reel



white	**2009-110**	1

Overview of certification organizations, see page 654

❶ Conductor range: 0.14 … 1.5 mm² "s + f-st"; Push-in termination: 0.5 … 1.5 mm² "s" and 0.5 … 0.75 mm² "insulated ferrule, 10 mm"

❷ 500 V = rated voltage
6 kV = rated surge voltage
3 = pollution degree
(see Section 14)

❸ Current-carrying capacity curves upon request

Strain Relief Plate (SRP), Gray			Assembled	Locking Lever (LL), Gray		Assembled		SRP and LL, Gray Assembled
SRP				Pole No.	Quantity	1-Way	2-Way	
			Item No. Suffix			Item No. Suffix		Item No. Suffix
Item No.	Color	Width						
734-327	gray	6mm	/132-0xx	2 to 3	1	/122-0xx	–	/142-0xx
734-328	gray	12.5mm	/133-0xx	4 to 6	1	–	/124-0xx	/143-0xx
734-329	gray	25mm	/134-0xx	7 to 9	1	–	/124-0xx	/144-0xx
734-326	gray	35mm	/135-0xx	10 to 15	2	–	/125-0xx	/145-0xx

For colored female plugs, the item number suffix "xx" must be replaced by the blue "-006" and the green-yellow "-016" color suffix.

Dimensions of locking levers

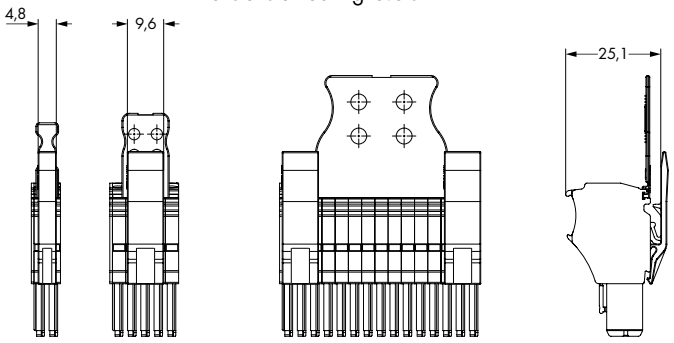

Description	Color	Item No.	Suffix No.
1-conductor female plug 2- to 15-pole	gray	2020-102	none
	blue	to	/000-006
	green-yellow	2020-115	/000-016

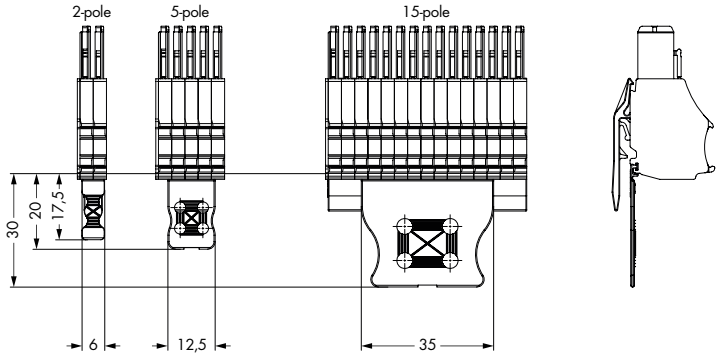

Dimensions of strain relief plates

X-COM®S-SYSTEM-MINI
2-Conductor Female Plugs with Locking Levers and Strain Relief Plates
1 (1.5) mm², 2020 Series

2

0.14 … 1 (1.5) mm² ❶	24 … 16 AWG	
500 V/6 kV/3 ❷	300 V, 10 A	
I_N 13.5 A ❸	300 V, 10 A	
Module width 3.5 mm / 0.138 inch		
9 … 11 mm / 0.35 … 0.43 inch		

0.14 … 1 (1.5) mm² ❶	24 … 16 AWG	
500 V/6 kV/3 ❷	300 V, 10 A	
I_N 13.5 A ❸	300 V, 10 A	
Module width 3.5 mm / 0.138 inch		
9 … 11 mm / 0.35 … 0.43 inch		

0.14 … 1 (1.5) mm² ❶	24 … 16 AWG	
500 V/6 kV/3 ❷	300 V, 10 A	
I_N 13.5 A ❸	300 V, 10 A	
Module width 3.5 mm / 0.138 inch		
9 … 11 mm / 0.35 … 0.43 inch		

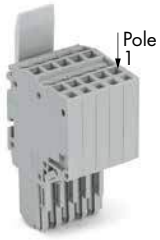







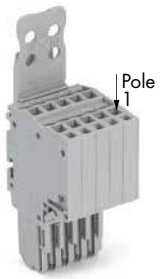

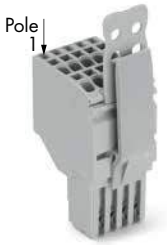

Pole No.	Item No.	Pack. Unit
2-conductor female plug, with locking lever, for insertion into carrier terminal blocks, with coding fingers, gray		
According to EN 61984, connectors without current interrupting capacity shall not be mated and unmated when live or under load.		
2	**2020-202/122-000**	100
3	**2020-203/122-000**	50
4	**2020-204/124-000**	50
5	**2020-205/124-000**	50
6	**2020-206/124-000**	25
7	**2020-207/124-000**	25
8	**2020-208/124-000**	25
9	**2020-209/124-000**	25
10	**2020-210/125-000**	25
11	**2020-211/125-000**	20
12	**2020-212/125-000**	20
13	**2020-213/125-000**	10
14	**2020-214/125-000**	10
15	**2020-215/125-000**	10

Pole No.	Item No.	Pack. Unit
2-conductor female plug, with strain relief plate, for insertion into carrier terminal blocks, with coding fingers, gray		
According to EN 61984, connectors without current interrupting capacity shall not be mated and unmated when live or under load.		
2	**2020-202/132-000**	100
3	**2020-203/132-000**	50
4	**2020-204/133-000**	50
5	**2020-205/133-000**	50
6	**2020-206/133-000**	25
7	**2020-207/134-000**	25
8	**2020-208/134-000**	25
9	**2020-209/134-000**	25
10	**2020-210/135-000**	25
11	**2020-211/135-000**	20
12	**2020-212/135-000**	20
13	**2020-213/135-000**	10
14	**2020-214/135-000**	10
15	**2020-215/135-000**	10

Pole No.	Item No.	Pack. Unit
2-conductor female plug, with strain relief plate and locking lever, for insertion into carrier terminal blocks, with coding fingers, gray		
According to EN 61984, connectors without current interrupting capacity shall not be mated and unmated when live or under load.		
2	**2020-202/142-000**	100
3	**2020-203/142-000**	50
4	**2020-204/143-000**	50
5	**2020-205/143-000**	50
6	**2020-206/143-000**	25
7	**2020-207/144-000**	25
8	**2020-208/144-000**	25
9	**2020-209/144-000**	25
10	**2020-210/145-000**	25
11	**2020-211/145-000**	20
12	**2020-212/145-000**	20
13	**2020-213/145-000**	10
14	**2020-214/145-000**	10
15	**2020-215/145-000**	10

Accessories Female Plugs

Appropriate marking systems: WMB/WMB Inline/Marking strips (see Section 13)

Protective warning marker, with black high-voltage symbol, for 5 terminal blocks



yellow	**2000-115**	100 (4x25)

Locking lever, 9.6 mm wide



orange	**2022-152**	100 (4x25)
gray	**2022-151**	100 (4x25)

Locking lever, 4.8 mm wide



orange	**2022-142**	100 (4x25)
gray	**2022-141**	100 (4x25)

Strain relief plate, gray



35 mm wide	**734-326**	100 (4x25)
25 mm wide	**734-329**	100 (4x25)
6 mm wide	**734-327**	100 (4x25)
12.5 mm wide	**734-328**	100 (4x25)

WMB Inline, plain, 2,300 WMB markers (3.5 mm) per reel



white	**2009-113**	1

WMB Multi marking system, white, 10 strips with 10 markers per card, for 3.5 mm terminal block width

plain	**793-3501**	5

Marking strip, plain, 11 mm wide, 50 m reel



white	**2009-110**	1

Overview of certification organizations, see page 654

❶ Conductor range: 0.14 … 1.5 mm² "s + f-st"; Push-in termination: 0.5 … 1.5 mm² "s" and 0.5 … 0.75 mm² "insulated ferrule, 10 mm"

❷ 500 V = rated voltage
6 kV = rated surge voltage
3 = pollution degree
(see Section 14)

❸ Current-carrying capacity curves upon request

Strain Relief Plate (SRP), Gray			Assembled	Locking Lever (LL), Gray		Assembled		SRP and LL, Gray Assembled
SRP				Pole No.	Quantity	1-Way	2-Way	
			Item No. Suffix			Item No. Suffix		Item No. Suffix
Item No.	Color	Width						
734-327	gray	6mm	/132-0xx	2 to 3	1	/122-0xx	–	/142-0xx
734-328	gray	12.5mm	/133-0xx	4 to 6	1	–	/124-0xx	/143-0xx
734-329	gray	25mm	/134-0xx	7 to 9	1	–	/124-0xx	/144-0xx
734-326	gray	35mm	/135-0xx	10 to 15	2	–	/125-0xx	/145-0xx

For colored female plugs, the item number suffix "xx" must be replaced by the blue "-006" and the green-yellow "-016" color suffix.

Dimensions of locking levers

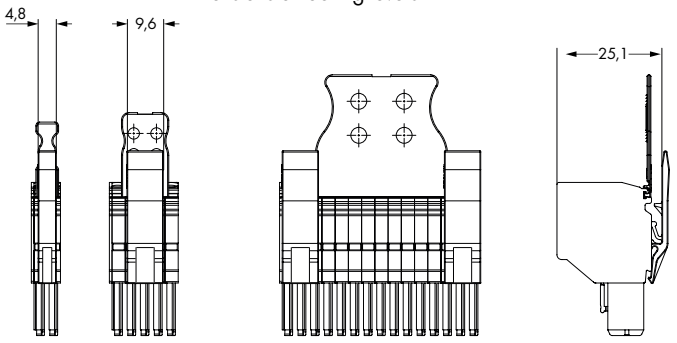

Description	Color	Item No.	Suffix No.
2-conductor female plug 2- to 15-pole	gray	2020-202 to 2020-215	none
	blue		/000-006
	green-yellow		/000-016

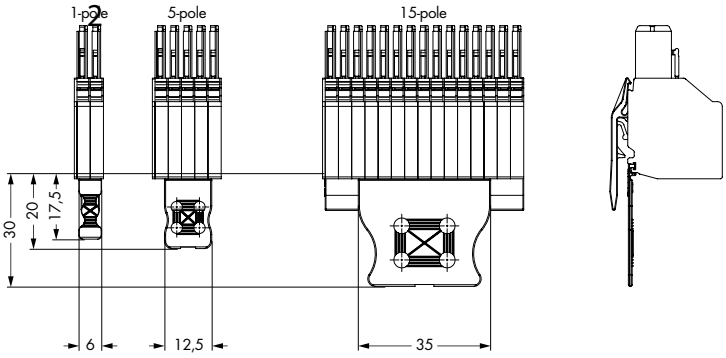

Dimensions of strain relief plates

X-COM®S-SYSTEM-MINI – 1-Conductor/1-Pin, 2-Conductor/1-Pin and 2-Conductor/2-Pin Carrier Terminal Blocks

2.5 (4) mm², 2022 Series

2

0.25 … 2.5 (4) mm² ❶	22 … 12 AWG	
690 V/6 kV/3 ❷	600 V, 20 A	
I_N 24 A (32 A) ❸	600 V, 20 A	
Terminal block width 5.2 mm / 0.205 inch		
10 … 12 mm / 0.39 … 0.47 inch		

0.25 … 2.5 (4) mm² ❶	22 … 12 AWG	
690 V/6 kV/3 ❷	600 V, 20 A	
I_N 24 A (32 A) ❸	600 V, 20 A	
Terminal block width 5.2 mm / 0.205 inch		
10 … 12 mm / 0.39 … 0.47 inch		

0.25 … 2.5 (4) mm² ❶	22 … 12 AWG	
690 V/6 kV/3 ❷	600 V, 20 A	
I_N 24 A (32 A) ❸	600 V, 20 A	
Terminal block width 5.2 mm / 0.205 inch		
10 … 12 mm / 0.39 … 0.47 inch		

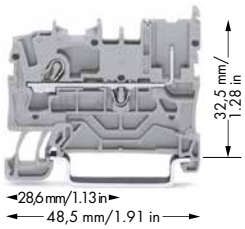

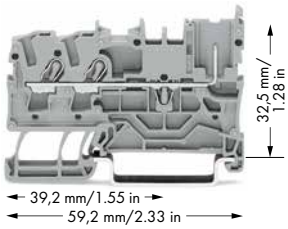

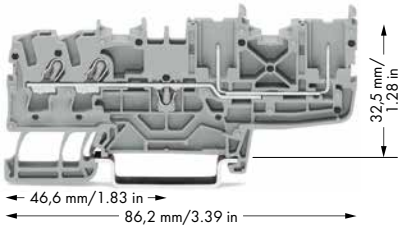

	Item No.	Pack. Unit
1-conductor/1-pin carrier terminal block		
gray	**2022-1201**	100
blue	**2022-1204**	100
orange	**2022-1202**	100
1-conductor/1-pin ground carrier terminal block		
green-yellow	**2022-1207**	100

	Item No.	Pack. Unit
2-conductor/1-pin carrier terminal block		
gray	**2022-1301**	100
blue	**2022-1304**	100
orange	**2022-1302**	100
2-conductor/1-pin ground carrier terminal block		
green-yellow	**2022-1307**	100

	Item No.	Pack. Unit
2-conductor/2-pin carrier terminal block		
gray	**2022-1401**	50
blue	**2022-1404**	50
orange	**2022-1402**	50
2-conductor/2-pin ground carrier terminal block		
green-yellow	**2022-1407**	50

Item-Specific Accessories

End and intermediate plate, 1 mm thick



orange	**2022-1292**	100 (4x25)
gray	**2022-1291**	100 (4x25)

Item-Specific Accessories

End and intermediate plate, 1 mm thick



orange	**2022-1392**	100 (4x25)
gray	**2022-1391**	100 (4x25)

Item-Specific Accessories

End and intermediate plate, 1 mm thick



orange	**2022-1492**	100 (4x25)
gray	**2022-1491**	100 (4x25)

2022 Series Accessories

Appropriate marking systems: WMB/WMB Inline/Marking strips (see Section 13)

Insulation stop, 5 pcs/strip, 0.25 … 0.5 mm²



light gray	**2002-171**	200 (8x25)

Insulation stop, 5 pcs/strip, 0.75 … 1 mm²



dark gray	**2002-172**	200 (8x25)

Push-in type jumper bar, insulated, I_N 25 A, light gray ❹



2-way	**2002-402**	200 (8x25)
3-way	**2002-403**	200 (8x25)
4-way	**2002-404**	200 (8x25)
5-way	**2002-405**	100 (4x25)
6-way	**2002-406**	100 (4x25)
7-way	**2002-407**	100 (4x25)
8-way	**2002-408**	100 (4x25)
9-way	**2002-409**	100 (4x25)
10-way	**2002-410**	100 (4x25)

Delta jumper, insulated, I_N = I_N terminal block, light gray ❹



1-2 3-4 5-6	**2002-406/020-000**	100 (4x25)

Star point jumper, insulated, I_N = I_N terminal block, light gray ❹



1-3-5	**2002-405/011-000**	100 (4x25)

Push-in type jumper bar, insulated, I_N 25 A, light gray



from 1 to 3	**2002-433**	200 (8x25)
from 1 to 4	**2002-434**	200 (8x25)
from 1 to 5	**2002-435**	100 (4x25)
from 1 to 6	**2002-436**	100 (4x25)
from 1 to 7	**2002-437**	100 (4x25)
from 1 to 8	**2002-438**	100 (4x25)
from 1 to 9	**2002-439**	100 (4x25)
from 1 to 10	**2002-440**	100 (4x25)

Staggered jumper, insulated, I_N 25 A, light gray ❹



2-way	**2002-472**	100 (4x25)
3-way	**2002-473**	100 (4x25)
4-way	**2002-474**	100 (4x25)
5-way	**2002-475**	50 (2x25)
6-way	**2002-476**	50 (2x25)
7-way	**2002-477**	50 (2x25)
8-way	**2002-478**	50 (2x25)
9-way	**2002-479**	50 (2x25)
10-way	**2002-480**	50 (2x25)
11-way	**2002-481**	50 (2x25)
12-way	**2002-482**	50 (2x25)

Adjacent jumper for continuous commoning, insulated, I_N ❹



25 A, light gray		
2-way	**2002-400**	100 (4x25)

Adjacent jumper for continuous commoning, insulated, I_N ❹



25 A, light gray		
1 to 3	**2002-423**	100 (4x25)

Push-in type wire jumper, insulated, wire size 1.5 mm², I_N 18 A ❹



L = 60 mm	**2009-412**	100 (10x10)
L = 110 mm	**2009-414**	100 (10x10)
L = 250 mm	**2009-416**	100 (10x10)

Carrier with 6 coding pins, for coding female plugs



orange	**2022-100**	100 (4x25)

Test pin, 1 mm Ø



	859-500	1

Protective warning marker, with black high-voltage symbol, for 5 terminal blocks



yellow	**2002-115**	100 (4x25)

Overview of certification organizations, see page 654

❶ Conductor range: 0.25 … 4 mm² "s + f-st";
Push-in termination: 0.75 … 4 mm² "s"
and 0.75 … 2.5 mm²
"insulated ferrule, 12 mm"

❷ 690 V = rated voltage
6 kV = rated surge voltage
3 = pollution degree
(see Section 14)

❸ Current-carrying capacity curves upon request

❹ See application notes for:
Colored push-in type jumper bar, page 134
Delta jumper, page 135
Star point jumper, page 135
Staggered jumper, page 136
Adjacent jumper for continuous commoning, page 137
Push-in type wire jumper, page 138

Accessories

1-conductor female plug			
	gray	**2022-101**	200
WMB Multi marking system, white, 10 strips with 10 markers per card, 5 … 5.2 mm stretchable			
	plain	**793-5501**	5
WMB Multi marking system, plain, 10 strips with 10 markers per card, 5 … 5.2 mm stretchable			
	yellow	**793-5501/000-002**	
	red	**793-5501/000-005**	
	blue	**793-5501/000-006**	
	gray	**793-5501/000-007**	
	orange	**793-5501/000-012**	
	light green	**793-5501/000-017**	
	green	**793-5501/000-023**	
	violet	**793-5501/000-024**	
			5
WMB Inline, plain, 1,500 WMB markers (5 mm) per reel, 5 … 5.2 mm stretchable			
	white	**2009-115**	1
Marking strip, plain, 11 mm wide, 50 m reel			
	white	**2009-110**	1
Screwless end stop, for DIN-35 rail, 6 mm wide			
	gray	**249-116**	100 (4x25)
Screwless end stop, for DIN-35 rail, 10 mm wide			
	gray	**249-117**	50 (2x25)

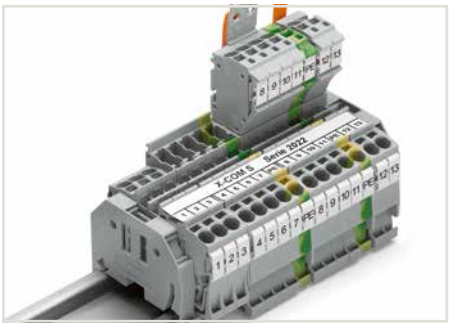

2022 Series X-COM®S-SYSTEM Carrier Terminal Blocks combined with 2002 Series Through Terminal Blocks

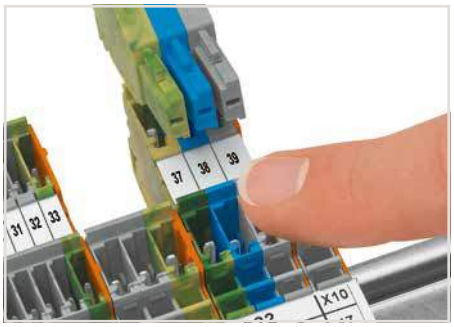

Carrier terminal blocks and female plugs are touch-proof.

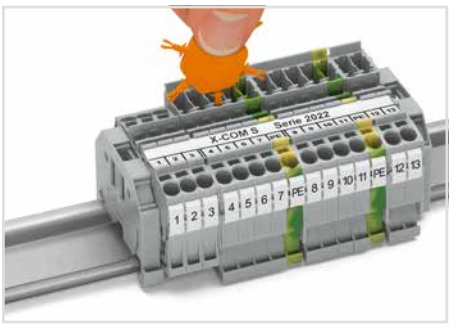

Insert coding pin into the corresponding slot and twist it off.



X-COM®S-SYSTEM
1-Conductor/1-Pin Double-Deck Carrier Terminal Blocks
2.5 (4) mm², 2022 Series

2

0.25 … 2.5 (4) mm² ❶ 690 V/6 kV/3 ❷ I_N 24 A (28 A) ❸	AWG 22 … 12 600 V, 20 A 600 V, 20 A	Terminal block width 5.2 mm / 0.205 inch 10 … 12 mm / 0.39 … 0.47 inch

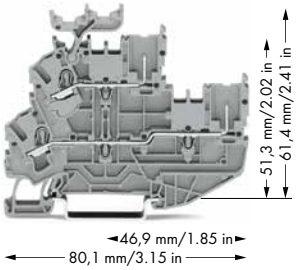

	Item No.	Pack. Unit
1-conductor/1-pin double-deck carrier terminal block, through/through terminal block, with marker carrier, gray housing		
L/L	**2022-2231**	50
N/L	**2022-2232**	50
L/N	**2022-2233**	50
1-conductor/1-pin double-deck carrier terminal block, through/through terminal block, without marker carrier, gray housing		
L/L	**2022-2201**	50
N/L	**2022-2202**	50
L/N	**2022-2203**	50

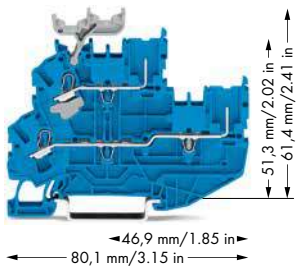

	Item No.	Pack. Unit
1-conductor/1-pin double-deck carrier terminal block, through/through terminal block, with marker carrier, blue housing		
N/N	**2022-2234**	50
1-conductor/1-pin double-deck carrier terminal block, through/through terminal block, without marker carrier, blue housing		
N/N	**2022-2204**	50

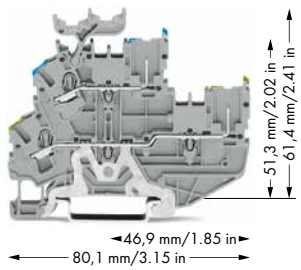

	Item No.	Pack. Unit
1-conductor/1-pin double-deck carrier terminal block, ground conductor/through terminal block, with marker carrier, gray housing		
PE/N	**2022-2247**	50
PE/L	**2022-2257**	50
1-conductor/1-pin double-deck carrier terminal block, ground conductor/through terminal block, without marker carrier, gray housing		
PE/N	**2022-2217**	50
PE/L	**2022-2227**	50

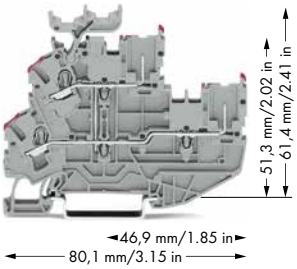

	Item No.	Pack. Unit
2-conductor/2-pin double-deck carrier terminal block, 2-conductor/2-pin through terminal block, with marker carrier, internally commoned, violet conductor entry, gray housing		
L	**2022-2238**	50
2-conductor/2-pin double-deck carrier terminal block, 2-conductor/2-pin through terminal block, without marker carrier, internally commoned, violet conductor entry, gray housing		
L	**2022-2208**	50

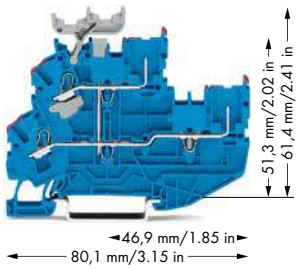

	Item No.	Pack. Unit
2-conductor/2-pin double-deck carrier terminal block, 2-conductor/2-pin through terminal block, with marker carrier, internally commoned, violet conductor entry, blue housing		
N	**2022-2239**	50
2-conductor/2-pin double-deck carrier terminal block, 2-conductor/2-pin through terminal block, without marker carrier, internally commoned, violet conductor entry, blue housing		
N	**2022-2209**	50

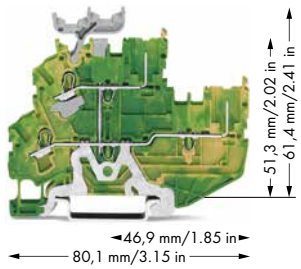

	Item No.	Pack. Unit
2-conductor/2-pin double-deck carrier terminal block, 2-conductor/2-pin ground conductor terminal block, with marker carrier, internally commoned, green-yellow housing		
PE	**2022-2237**	50
2-conductor/2-pin double-deck carrier terminal block, 2-conductor/2-pin ground conductor terminal block, without marker carrier, internally commoned, green-yellow housing		
PE	**2022-2207**	50

Overview of certification organizations, see page 654

❶ Conductor range: 0.25 ... 4 mm² "s + f-st";
Push-in termination: 0.75 ... 4 mm² "s"
and 0.75 ... 2.5 mm²
"insulated ferrule, 12 mm"

❷ 690 V = rated voltage
6 kV = rated surge voltage
3 = pollution degree
(see Section 14)

❸ Current-carrying capacity curves upon request

❹ See application notes for:
Colored push-in type jumper bar, page 134
Vertical jumper, page 139
Adjacent jumper for continuous commoning, page 137

2022 Series Accessories

Appropriate marking systems: WMB/WMB Inline/Marking strips (see Section 13)

End and intermediate plate, 1 mm thick



orange	**2022-2292**	100 (4x25)
gray	**2022-2291**	100 (4x25)

Insulation stop, 5 pcs/strip, 0.25 ... 0.5 mm²



light gray	**2002-171**	200 (8x25)

Insulation stop, 5 pcs/strip, 0.75 ... 1 mm²



dark gray	**2002-172**	200 (8x25)

Push-in type jumper bar, insulated, I_N 25 A, light gray ❹



2-way	**2002-402**	200 (8x25)
3-way	**2002-403**	200 (8x25)
4-way	**2002-404**	200 (8x25)
5-way	**2002-405**	100 (4x25)
6-way	**2002-406**	100 (4x25)
7-way	**2002-407**	100 (4x25)
8-way	**2002-408**	100 (4x25)
9-way	**2002-409**	100 (4x25)
10-way	**2002-410**	100 (4x25)

Push-in type jumper bar, insulated, I_N 25 A, light gray



from 1 to 3	**2002-433**	200 (8x25)
from 1 to 4	**2002-434**	200 (8x25)
from 1 to 5	**2002-435**	100 (4x25)
from 1 to 6	**2002-436**	100 (4x25)
from 1 to 7	**2002-437**	100 (4x25)
from 1 to 8	**2002-438**	100 (4x25)
from 1 to 9	**2002-439**	100 (4x25)
from 1 to 10	**2002-440**	100 (4x25)

Double-deck vertical jumper, insulated, I_N 24 A ❹

light gray	**2002-492**	100 (4x25)
orange	**2002-492/000-012**	

Adjacent jumper for continuous commoning, insulated, I_N ❹

25 A, light gray

2-way	**2002-400**	100 (4x25)

Adjacent jumper for continuous commoning, insulated, I_N ❹

25 A, light gray



1 to 3	**2002-423**	100 (4x25)

Carrier with 6 coding pins, for coding female plugs



orange	**2022-100**	100 (4x25)

Test pin, 1 mm Ø



	859-500	1

1-conductor female plug



gray	**2022-101**	200

Protective warning marker, with black high-voltage symbol, for 5 terminal blocks



yellow	**2002-115**	100 (4x25)

Double-deck marker carrier, pivoting



gray	**2002-121**	50 (2x25)

WMB Multi marking system, white, 10 strips with 10 markers per card, 5 ... 5.2 mm stretchable

plain	**793-5501**	5

WMB Multi marking system, plain, 10 strips with 10 markers per card, 5 ... 5.2 mm stretchable



yellow	**793-5501/000-002**	
red	**793-5501/000-005**	
blue	**793-5501/000-006**	
gray	**793-5501/000-007**	
orange	**793-5501/000-012**	
light green	**793-5501/000-017**	
green	**793-5501/000-023**	
violet	**793-5501/000-024**	

5

WMB Inline, plain, 1,500 WMB markers (5 mm) per reel, 5 ... 5.2 mm stretchable



white	**2009-115**	1

Marking strip, plain, 11 mm wide, 50 m reel



white	**2009-110**	1



Size comparison:
Double-deck carrier terminal blocks with 3.5 mm and 5.2 mm terminal block widths

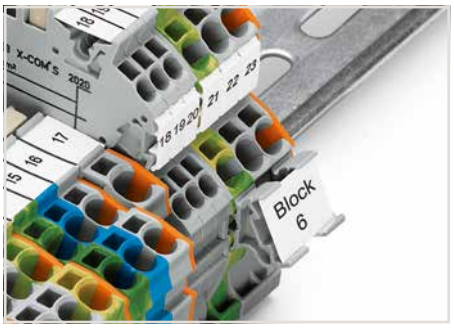

Marker carrier (2009-198)

PUSH-IN CAGE CLAMP®

X-COM®S-SYSTEM
1-Conductor Female Plugs
2.5 (4) mm², 2022 Series

0.25 … 2.5 (4) mm² ❶	22 … 12 AWG
690 V/6 kV/3 ❷	600 V, 20 A
I_N 24 A (32 A) ❸	600 V, 20 A

Module width 5.2 mm / 0.205 inch
10 … 12 mm / 0.39 … 0.47 inch

2



❶ Conductor range: 0.25 … 4 mm² "s + f-st"; Push-in termination: 0.75 … 4 mm² "s" and 0.75 … 2.5 mm² "insulated ferrule, 12 mm"

❷ 690 V = rated voltage
6 kV = rated surge voltage
3 = pollution degree
(see Section 14)

❸ Current-carrying capacity curves upon request

❹ Item-no. suffix
blue …/000-006
orange …/000-012

Pole No.	Item No.	Pack. Unit
1-conductor female plug, for insertion into carrier terminal blocks, with coding fingers, gray		
According to EN 61984, connectors without current interrupting capacity shall not be mated and unmated when live or under load.		
1	**2022-101**	200
2	**2022-102**	200
3	**2022-103**	100
4	**2022-104**	100
5	**2022-105**	50
6	**2022-106**	50
7	**2022-107**	50
8	**2022-108**	50
9	**2022-109**	50
10	**2022-110**	25
11	**2022-111**	25
12	**2022-112**	25
13	**2022-113**	25
14	**2022-114**	25
15	**2022-115**	25
1-conductor female plug, for insertion into carrier terminal blocks, with coding fingers, green-yellow		
According to EN 61984, connectors without current interrupting capacity shall not be mated and unmated when live or under load.		
1	**2022-101/000-016**	200
2	**2022-102/000-016**	200

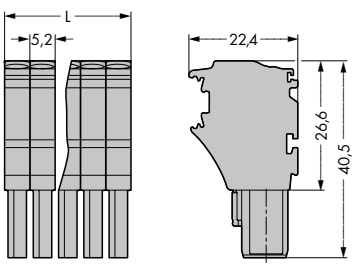

L = pole no. x module width

Dimensions in mm

Accessories

Appropriate marking systems: (see Section 13)

Insulation stop, 5 pcs/strip, 0.25 … 0.5 mm²			
	light gray	**2002-171**	200 (8x25)
Insulation stop, 5 pcs/strip, 0.75 … 1 mm²			
	dark gray	**2002-172**	200 (8x25)
Locking lever, 4.8 mm wide			
	orange	**2022-142**	100 (4x25)
	gray	**2022-141**	100 (4x25)
Locking lever, 9.6 mm wide			
	orange	**2022-152**	100 (4x25)
	gray	**2022-151**	100 (4x25)
Protective warning marker, with black high-voltage symbol, for 5 terminal blocks			
	yellow	**2002-115**	100 (4x25)
Carrier with 6 coding pins, for coding female plugs			
	orange	**2022-100**	100 (4x25)
Strain relief plate, gray			
	35 mm wide	**734-326**	100 (4x25)
	6 mm wide	**734-327**	100 (4x25)
	12.5 mm wide	**734-328**	100 (4x25)
	25 mm wide	**734-329**	100 (4x25)
	55 mm wide	**734-430**	50 (2x25)
	75 mm wide	**734-431**	50 (2x25)
WMB Multi marking system, white, 10 strips with 10 markers per card, 5 … 5.2 mm stretchable			
	plain	**793-5501**	5
WMB Inline, plain, 1,500 WMB markers (5 mm) per reel, 5 … 5.2 mm stretchable			
	white	**2009-115**	1
Marking strip, plain, 11 mm wide, 50 m reel			
	white	**2009-110**	1



Coding a female plug: remove coding finger using a suitable tool.

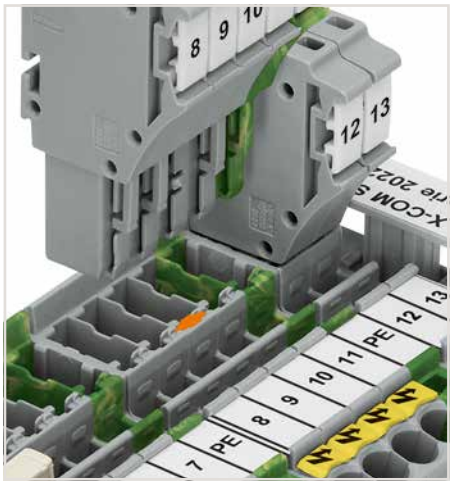

Insert a coding pin (2022 100) into the corresponding location of the carrier terminal block.

Overview of certification organizations, see page 654

PUSH-IN CAGE CLAMP®

X-COM®S-SYSTEM-MINI
Carrier Terminal Blocks and 1-Conductor Female Plugs
Assembly Types



1-conductor female plug
Carrier terminal blocks can be commoned via 2002 Series Push-In Type Jumper Bars and tested via 859-500 Test Pin.

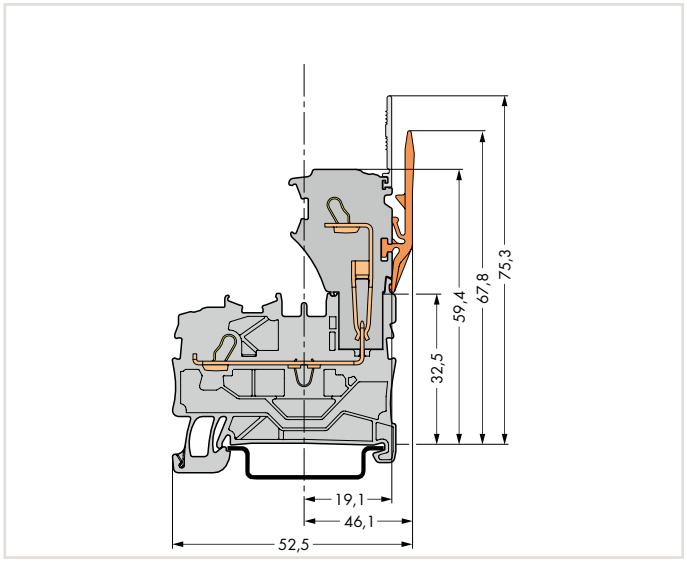

Carrier terminal block

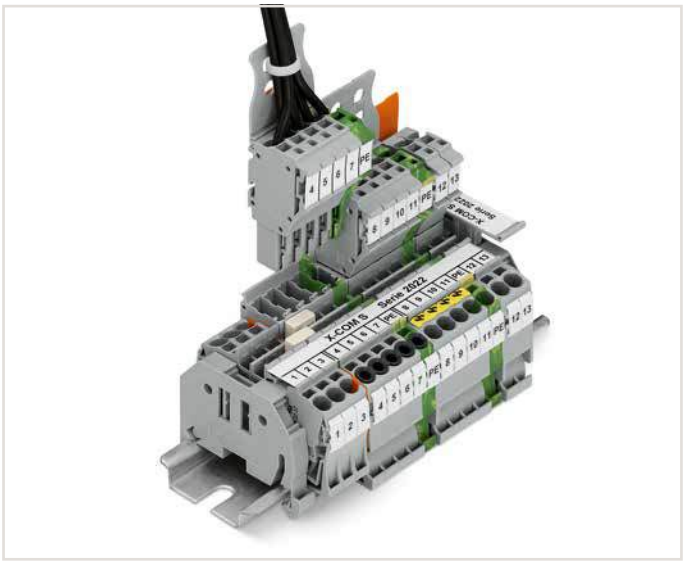

X-COM®S-SYSTEM terminal block assembly

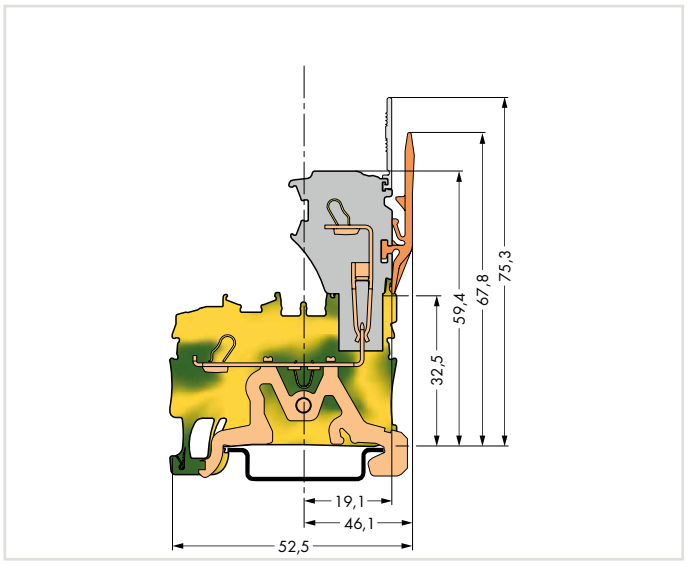

Ground carrier terminal block

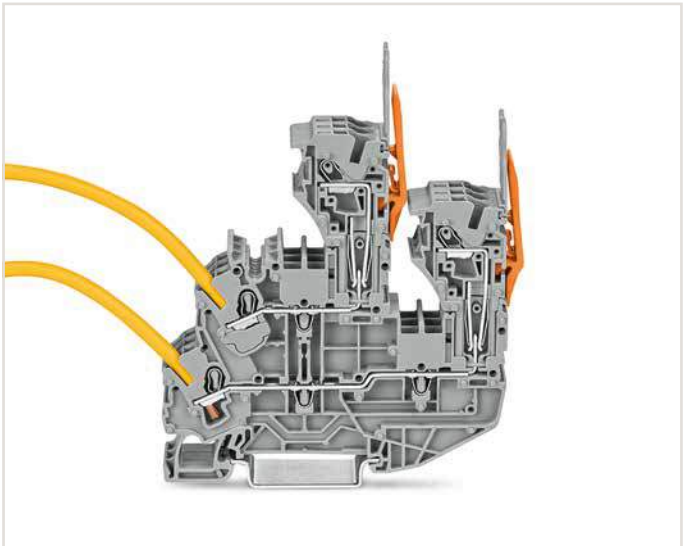

1-conductor female plug
Double-deck carrier terminal blocks can be commoned via 2002 Series Push-In Type Jumper Bars and tested via 859-500 Test Pin.

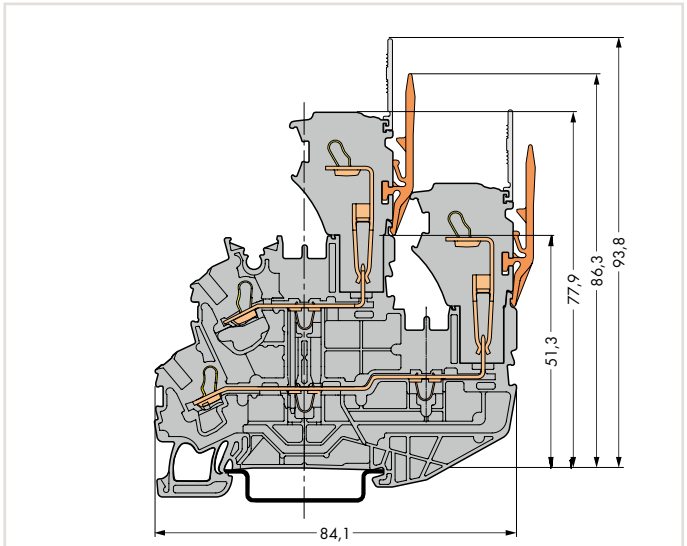

Double-deck carrier terminal block

X-COM®S-SYSTEM
Female Plugs for Self-Assembly
2.5 (4) mm², 2022 Series

0.25 … 2.5 (4) mm² ❶	22 … 12 AWG
690 V/6 kV/3 ❷	600 V, 20 A
I_N 24 A (32 A) ❸	600 V, 20 A

Terminal block width 5.2 mm / 0.205 inch
10 … 12 mm / 0.39 … 0.47 inch

2



	Item No.	Pack. Unit
1-conductor end module, with coding fingers		
gray	**2022-181**	250
blue	**2022-184**	250
orange	**2022-182**	250
green-yellow	**2022-187**	250
1-conductor center module, with coding fingers		
gray	**2022-171**	250
blue	**2022-174**	250
orange	**2022-172**	250
green-yellow	**2022-177**	250
1-conductor base module, with integrated end plate, with coding fingers		
gray	**2022-161**	250
blue	**2022-164**	250
orange	**2022-162**	250
green-yellow	**2022-167**	250

Accessories Female Plugs

Appropriate marking systems: WMB/WMB Inline/Marking strips (see Section 13)

Insulation stop, 5 pcs/strip, 0.25 … 0.5 mm²			
light gray	**2002-171**	200 (8x25)	
Insulation stop, 5 pcs/strip, 0.75 … 1 mm²			
dark gray	**2002-172**	200 (8x25)	
Locking lever, 4.8 mm wide			
orange	**2022-142**	100 (4x25)	
gray	**2022-141**	100 (4x25)	
Locking lever, 9.6 mm wide			
orange	**2022-152**	100 (4x25)	
gray	**2022-151**	100 (4x25)	
Strain relief plate, gray			
35 mm wide	**734-326**	100 (4x25)	
6 mm wide	**734-327**	100 (4x25)	
12.5 mm wide	**734-328**	100 (4x25)	
25 mm wide	**734-329**	100 (4x25)	
55 mm wide	**734-430**	50 (2x25)	
75 mm wide	**734-431**	50 (2x25)	
Protective warning marker, with black high-voltage symbol, for 5 terminal blocks			
yellow	**2002-115**	100 (4x25)	
WMB Multi marking system, white, 10 strips with 10 markers per card, 5 … 5.2 mm stretchable			
plain	**793-5501**	5	
WMB Multi marking system, plain, 10 strips with 10 markers per card, 5 … 5.2 mm stretchable			
yellow	**793-5501/000-002**		
red	**793-5501/000-005**		
blue	**793-5501/000-006**		
gray	**793-5501/000-007**		
orange	**793-5501/000-012**		
light green	**793-5501/000-017**		
green	**793-5501/000-023**		
violet	**793-5501/000-024**		
		5	
WMB Inline, plain, 1,500 WMB markers (5 mm) per reel, 5 … 5.2 mm stretchable			
white	**2009-115**	1	

Overview of certification organizations, see page 654

Customizing Modular Female Plugs
WAGO's modular X-COM®S-SYSTEM female plugs can be customized for applications requiring varying numbers of poles (e.g., when designing prototypes).

Modules and Pole Numbers
A customized X-COM®S-SYSTEM-MINI female plug consists of:
- One base module with an integrated end plate
- Up to 13 center modules (corresponding to a 15-pole female plug = maximum pole number)
- One end module

Intended Use
According to EN 61984, pluggable connectors without current interrupting capacity shall not be mated and unmated when live or under load.

Assembly
The appropriate mounting tool shall be used in order to guarantee that the individual modules are properly attached to each other without damaging the locking latches.

1. Conductor range: 0.25 … 4 mm² "s + f-st"; Push-in termination: 0.75 … 4 mm² "s" and 0.75 … 2.5 mm² "insulated ferrule, 12 mm"
2. 690 V = rated voltage
   6 kV = rated surge voltage
   3 = pollution degree
   (see Section 14)
3. Current-carrying capacity curves upon request


End module


Center module


Base module

Example: 5-Pole, 1-Conductor Female Plug

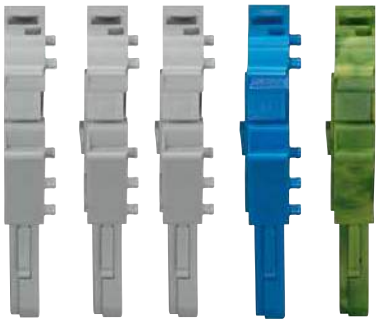



Base module with integrated end plate
2022-167

Center module
2022-174

Center modules
2022-171

End module
2022-181

X-COM®S-SYSTEM
Pre-Assembled 1-Conductor Female Plugs
2.5 (4) mm², 2022 Series

2

0.25 … 2.5 (4) mm² ❶	22 … 12 AWG	
690 V/6 kV/3 ❷	600 V, 20 A	
I_N 24 A (32 A) ❸	600 V, 20 A	
Module width 5.2 mm / 0.205 inch		
10 … 12 mm / 0.39 … 0.47 inch		

0.25 … 2.5 (4) mm² ❶	22 … 12 AWG	
690 V/6 kV/3 ❷	600 V, 20 A	
I_N 24 A (32 A) ❸	600 V, 20 A	
Module width 5.2 mm / 0.205 inch		
10 … 12 mm / 0.39 … 0.47 inch		

0.25 … 2.5 (4) mm² ❶	22 … 12 AWG	
690 V/6 kV/3 ❷	600 V, 20 A	
I_N 24 A (32 A) ❸	600 V, 20 A	
Module width 5.2 mm / 0.205 inch		
10 … 12 mm / 0.39 … 0.47 inch		







Pole No.	Item No.	Pack. Unit
1-conductor female plug, with ground base module (green-yellow), for insertion into carrier terminal blocks, with coding fingers		
3	**2022-103/000-036**	100
4	**2022-104/000-036**	100
5	**2022-105/000-036**	50
6	**2022-106/000-036**	50
7	**2022-107/000-036**	50
8	**2022-108/000-036**	50
9	**2022-109/000-036**	50
10	**2022-110/000-036**	25
11	**2022-111/000-036**	25
12	**2022-112/000-036**	25
13	**2022-113/000-036**	25
14	**2022-114/000-036**	25
15	**2022-115/000-036**	25

Pole No.	Item No.	Pack. Unit
1-conductor female plug, with ground end module (green-yellow), for insertion into carrier terminal blocks, with coding fingers		
3	**2022-103/000-037**	100
4	**2022-104/000-037**	100
5	**2022-105/000-037**	50
6	**2022-106/000-037**	50
7	**2022-107/000-037**	50
8	**2022-108/000-037**	50
9	**2022-109/000-037**	50
10	**2022-110/000-037**	25
11	**2022-111/000-037**	25
12	**2022-112/000-037**	25
13	**2022-113/000-037**	25
14	**2022-114/000-037**	25
15	**2022-115/000-037**	25

Pole No.	Item No.	Pack. Unit
1-conductor female plug, with ground base module (green-yellow), for insertion into carrier terminal blocks, with coding fingers		
3	**2022-103/000-038**	100
4	**2022-104/000-038**	100
5	**2022-105/000-038**	50
6	**2022-106/000-038**	50
7	**2022-107/000-038**	50
8	**2022-108/000-038**	50
9	**2022-109/000-038**	50
10	**2022-110/000-038**	25
11	**2022-111/000-038**	25
12	**2022-112/000-038**	25
13	**2022-113/000-038**	25
14	**2022-114/000-038**	25
15	**2022-115/000-038**	25

Accessories Female Plugs

Appropriate marking systems: WMB/WMB Inline/Marking strips (see Section 13)

Insulation stop, 5 pcs/strip, 0.25 … 0.5 mm²



light gray **2002-171** 200 (8x25)

Insulation stop, 5 pcs/strip, 0.75 … 1 mm²



dark gray **2002-172** 200 (8x25)

Locking lever, 4.8 mm wide



orange **2022-142** 100 (4x25)

gray **2022-141** 100 (4x25)

Locking lever, 9.6 mm wide



orange **2022-152** 100 (4x25)

gray **2022-151** 100 (4x25)

Protective warning marker, with black high-voltage symbol, for 5 terminal blocks



yellow **2002-115** 100 (4x25)

Strain relief plate, gray



35 mm wide **734-326** 100 (4x25)

6 mm wide **734-327** 100 (4x25)

12.5 mm wide **734-328** 100 (4x25)

25 mm wide **734-329** 100 (4x25)

55 mm wide **734-430** 50 (2x25)

75 mm wide **734-431** 50 (2x25)

WMB Multi marking system, white, 10 strips with 10 markers per card, 5 … 5.2 mm stretchable

plain **793-5501** 5

WMB Inline, plain, 1,500 WMB markers (5 mm) per reel, 5 … 5.2 mm stretchable



white **2009-115** 1

Marking strip, plain, 11 mm wide, 50 m reel



white **2009-110** 1

Overview of certification organizations, see page 654

0.25 ... 2.5 (4) mm² ❶	22 ... 12 AWG
690 V/6 kV/3 ❷	600 V, 20 A
I_N 24 A (32 A) ❸	600 V, 20 A

Module width 5.2 mm / 0.205 inch

10 ... 12 mm / 0.39 ... 0.47 inch



Pole No.	Item No.	Pack. Unit
1-conductor female plug, with ground end module (green-yellow), for insertion into carrier terminal blocks, with coding fingers		
3	**2022-103/000-039**	100
4	**2022-104/000-039**	100
5	**2022-105/000-039**	50
6	**2022-106/000-039**	50
7	**2022-107/000-039**	50
8	**2022-108/000-039**	50
9	**2022-109/000-039**	50
10	**2022-110/000-039**	25
11	**2022-111/000-039**	25
12	**2022-112/000-039**	25
13	**2022-113/000-039**	25
14	**2022-114/000-039**	25
15	**2022-115/000-039**	25

❶ Conductor range: 0.25 ... 4 mm² "s + f-st"; Push-in termination: 0.75 ... 4 mm² "s" and 0.75 ... 2.5 mm² "insulated ferrule, 12 mm"

❷ 690 V = rated voltage
6 kV = rated surge voltage
3 = pollution degree
(see Section 14)

❸ Current-carrying capacity curves upon request

X-COM®S-SYSTEM
1-Conductor Female Plugs with Locking Levers and Strain Relief Plates
2.5 (4) mm², 2022 Series

2

0.25 … 2.5 (4) mm² ❶	22 … 12 AWG
690 V/6 kV/3 ❷	600 V, 20 A
I_N 24 A (32 A) ❸	600 V, 20 A

Module width 5.2 mm / 0.205 inch
10 … 12 mm / 0.39 … 0.47 inch

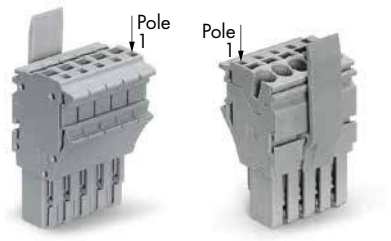

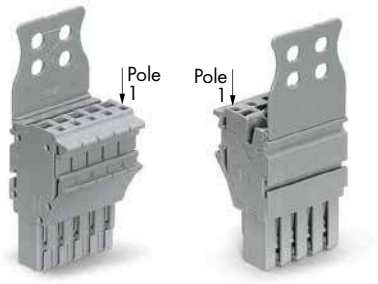

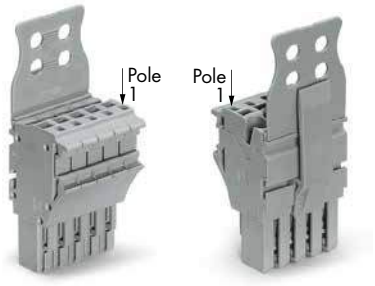

Pole No.	Item No.	Pack. Unit
1-conductor female plug, with locking lever, for insertion into carrier terminal blocks, with coding fingers, gray		
According to EN 61984, connectors without current interrupting capacity shall not be mated and unmated when live or under load.		
1	**2022-101/122-000**	200
2	**2022-102/122-000**	100
3	**2022-103/123-000**	100
4	**2022-104/123-000**	50
5	**2022-105/123-000**	50
6	**2022-106/123-000**	50
7	**2022-107/123-000**	25
8	**2022-108/123-000**	25
9	**2022-109/123-000**	25
10	**2022-110/123-000**	25
11	**2022-111/126-000**	25
12	**2022-112/126-000**	20
13	**2022-113/126-000**	20
14	**2022-114/126-000**	15
15	**2022-115/127-000**	15
1-conductor female plug, with locking lever, for insertion into carrier terminal blocks, with coding fingers		
According to EN 61984, connectors without current interrupting capacity shall not be mated and unmated when live or under load.		
1 blue	**2022-101/122-006**	200
1 green-yellow	**2022-101/122-016**	200

Pole No.	Item No.	Pack. Unit
1-conductor female plug, with strain relief plate, for insertion into carrier terminal blocks, with coding fingers, gray		
According to EN 61984, connectors without current interrupting capacity shall not be mated and unmated when live or under load.		
1	**2022-101/132-000**	200
2	**2022-102/132-000**	100
3	**2022-103/133-000**	100
4	**2022-104/133-000**	50
5	**2022-105/134-000**	50
6	**2022-106/134-000**	50
7	**2022-107/135-000**	25
8	**2022-108/135-000**	25
9	**2022-109/135-000**	25
10	**2022-110/135-000**	25
11	**2022-111/136-000**	25
12	**2022-112/136-000**	20
13	**2022-113/136-000**	20
14	**2022-114/136-000**	15
15	**2022-115/137-000**	15
1-conductor female plug, with strain relief plate, for insertion into carrier terminal blocks, with coding fingers		
According to EN 61984, connectors without current interrupting capacity shall not be mated and unmated when live or under load.		
1 blue	**2022-101/132-006**	200
1 green-yellow	**2022-101/132-016**	200

Pole No.	Item No.	Pack. Unit
1-conductor female plug, with strain relief plate and locking lever, for insertion into carrier terminal blocks, with coding fingers, gray		
According to EN 61984, connectors without current interrupting capacity shall not be mated and unmated when live or under load.		
1	**2022-101/142-000**	200
2	**2022-102/142-000**	100
3	**2022-103/143-000**	100
4	**2022-104/143-000**	50
5	**2022-105/144-000**	50
6	**2022-106/144-000**	50
7	**2022-107/145-000**	25
8	**2022-108/145-000**	25
9	**2022-109/145-000**	25
10	**2022-110/145-000**	25
11	**2022-111/146-000**	25
12	**2022-112/146-000**	20
13	**2022-113/146-000**	20
14	**2022-114/146-000**	15
15	**2022-115/147-000**	15
1-conductor female plug, with strain relief plate and locking lever, for insertion into carrier terminal blocks, with coding fingers,		
According to EN 61984, connectors without current interrupting capacity shall not be mated and unmated when live or under load.		
1 blue	**2022-101/142-006**	200
1 green-yellow	**2022-101/142-016**	200

Accessories Female Plugs

Appropriate marking systems: WMB/WMB Inline/Marking strips (see Section 13)

Insulation stop, 5 pcs/strip, 0.25 … 0.5 mm²



light gray **2002-171** 200 (8x25)

Insulation stop, 5 pcs/strip, 0.75 … 1 mm²



dark gray **2002-172** 200 (8x25)

Protective warning marker, with black high-voltage symbol, for 5 terminal blocks



yellow **2002-115** 100 (4x25)

WMB Multi marking system, white, 10 strips with 10 markers per card, 5 … 5.2 mm stretchable

plain **793-5501** 5

WMB Multi marking system, plain, 10 strips with 10 markers per card, 5 … 5.2 mm stretchable



yellow	**793-5501/000-002**	
red	**793-5501/000-005**	
blue	**793-5501/000-006**	
gray	**793-5501/000-007**	
orange	**793-5501/000-012**	
light green	**793-5501/000-017**	
green	**793-5501/000-023**	
violet	**793-5501/000-024**	

5

WMB Inline, plain, 1,500 WMB markers (5 mm) per reel, 5 … 5.2 mm stretchable



white **2009-115** 1

Marking strip, plain, 11 mm wide, 50 m reel



white **2009-110** 1

Overview of certification organizations, see page 654

1 Conductor range: 0.25 ... 4 mm² "s + f-st"; Push-in termination: 0.75 ... 4 mm² "s" and 0.75 ... 2.5 mm² "insulated ferrule, 12 mm"

2 690 V = rated voltage
6 kV = rated surge voltage
3 = pollution degree
(see Section 14)

3 Current-carrying capacity curves upon request

Strain Relief Plate (SRP), Gray			Assembled	Locking Lever (LL), Gray		Assembled		SRP and LL, Gray Assembled
SRP				Pole No.	Quantity	1-Way	2-Way	
			Item No. Suffix			Item No. Suffix		Item No. Suffix
Item No.	Color	Width						
734-327	gray	6mm	/132-0xx	1 to 2	1	/122-0xx	–	/142-0xx
734-328	gray	12.5mm	/133-0xx	3 to 4	1	–	/123-0xx	/143-0xx
734-329	gray	25mm	/134-0xx	5 to 6	1	–	/123-0xx	/144-0xx
734-326	gray	35mm	/135-0xx	7 to 10	1	–	/123-0xx	/145-0xx
734-430	gray	55mm	/136-0xx	11 to 14	2	–	/126-0xx	/146-0xx
734-431	gray	75mm	/137-0xx	15	2	–	/127-0xx	/147-0xx

For colored female plugs, the item number suffix "xx" must be replaced by the blue "-006" and the green-yellow "-016" color suffix.

Dimensions of locking levers

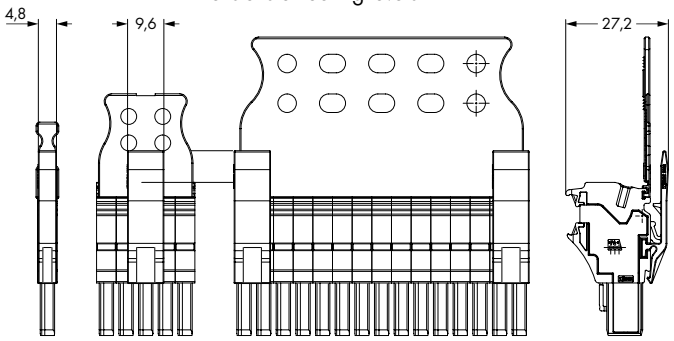

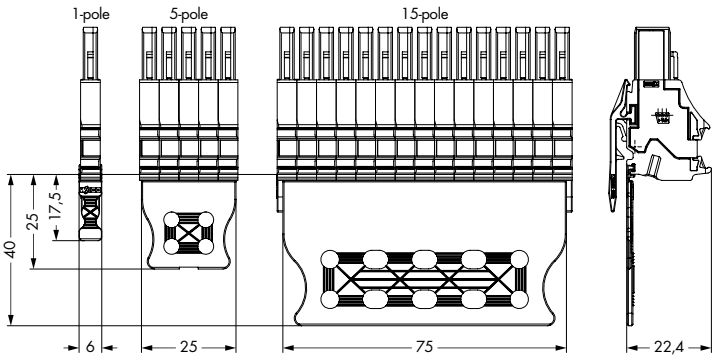

Dimensions of strain relief plates

Description	Color	Item No.	Suffix No.
1-conductor female plug 1- to 15-pole	gray	2022-101	none
	blue	to	/000-006
	green-yellow	2022-115	/000-016

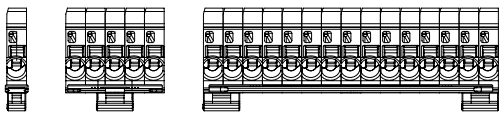

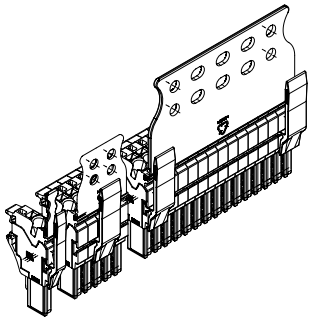

X-COM®S-SYSTEM-MINI – 1-Conductor/1-Pin, 2-Conductor/1-Pin and 2-Conductor/2-Pin Carrier Terminal Blocks for Ex nA Applications

2.5 (4) mm², 2022 Series

2

0.25 … 2.5 (4) mm² ❶ 630 V ❷ I_N 20 A | 22 … 12 AWG 600 V, 20 A 600 V, 20 A	0.25 … 2.5 (4) mm² ❶ | 22 … 12 AWG	0.25 … 2.5 (4) mm² ❶ 630 V ❷ I_N 20 A | 22 … 12 AWG 600 V, 20 A 600 V, 20 A
Terminal block width 5.2 mm / 0.205 inch 10 … 12 mm / 0.39 … 0.47 inch	Terminal block width 5.2 mm / 0.205 inch 10 … 12 mm / 0.39 … 0.47 inch	Terminal block width 5.2 mm / 0.205 inch 10 … 12 mm / 0.39 … 0.47 inch

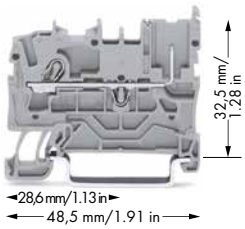

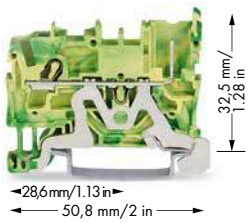

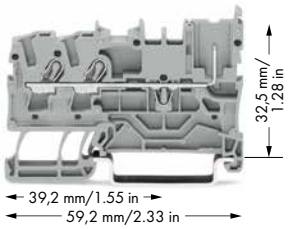

Item No.		Pack. Unit
1-conductor/1-pin carrier terminal block, suitable for Ex nA applications		
gray	**2022-1201/999-953**	100
blue	**2022-1204/999-953**	100

Item No.		Pack. Unit
1-conductor/1-pin ground carrier terminal block, suitable for Ex nA applications		
green-yellow	**2022-1207/999-953**	100

Item No.		Pack. Unit
2-conductor/1-pin carrier terminal block, suitable for Ex nA applications		
gray	**2022-1301/999-953**	100
blue	**2022-1304/999-953**	100
2-conductor/1-pin ground carrier terminal block, suitable for Ex nA applications		
green-yellow	**2022-1307/999-953**	100

Item-Specific Accessories

End and intermediate plate, 1 mm thick



orange	**2022-1292**	100 (4x25)
gray	**2022-1291**	100 (4x25)

Item-Specific Accessories

End and intermediate plate, 1 mm thick



orange	**2022-1292**	100 (4x25)
gray	**2022-1291**	100 (4x25)

Item-Specific Accessories

End and intermediate plate, 1 mm thick



orange	**2022-1392**	100 (4x25)
gray	**2022-1391**	100 (4x25)

2022 Series Accessories

Appropriate marking systems: WMB/WMB Inline/Marking strips (see Section 13)

Insulation stop, 5 pcs/strip, 0.25 … 0.5 mm²



light gray	**2002-171**	200 (8x25)

Insulation stop, 5 pcs/strip, 0.75 … 1 mm²



dark gray	**2002-172**	200 (8x25)

Push-in type jumper bar, insulated, I_N 25 A, light gray ❸



2-way	**2002-402**	200 (8x25)
3-way	**2002-403**	200 (8x25)
4-way	**2002-404**	200 (8x25)
5-way	**2002-405**	100 (4x25)
6-way	**2002-406**	100 (4x25)
7-way	**2002-407**	100 (4x25)
8-way	**2002-408**	100 (4x25)
9-way	**2002-409**	100 (4x25)
10-way	**2002-410**	100 (4x25)

Push-in type jumper bar, insulated, I_N 25 A, light gray



from 1 to 3	**2002-433**	200 (8x25)
from 1 to 4	**2002-434**	200 (8x25)
from 1 to 5	**2002-435**	100 (4x25)
from 1 to 6	**2002-436**	100 (4x25)
from 1 to 7	**2002-437**	100 (4x25)
from 1 to 8	**2002-438**	100 (4x25)
from 1 to 9	**2002-439**	100 (4x25)
from 1 to 10	**2002-440**	100 (4x25)

Staggered jumper, insulated, I_N 25 A, light gray ❸



2-way	**2002-472**	100 (4x25)
3-way	**2002-473**	100 (4x25)
4-way	**2002-474**	100 (4x25)
5-way	**2002-475**	50 (2x25)
6-way	**2002-476**	50 (2x25)
7-way	**2002-477**	50 (2x25)
8-way	**2002-478**	50 (2x25)
9-way	**2002-479**	50 (2x25)
10-way	**2002-480**	50 (2x25)
11-way	**2002-481**	50 (2x25)
12-way	**2002-482**	50 (2x25)

Push-in type wire jumper, insulated, wire size 1.5 mm², I_N 18 A ❸



L = 60 mm	**2009-412**	100 (10x10)
L = 110 mm	**2009-414**	100 (10x10)
L = 250 mm	**2009-416**	100 (10x10)

Carrier with 6 coding pins, for coding female plugs



orange	**2022-100**	100 (4x25)

Test pin, 1 mm Ø



	859-500	1

Protective warning marker, with black high-voltage symbol, for 5 terminal blocks



yellow	**2002-115**	100 (4x25)

WMB Multi marking system, white, 10 strips with 10 markers per card, 5 … 5.2 mm stretchable

plain	**793-5501**	5

WMB Multi marking system, plain, 10 strips with 10 markers per card, 5 … 5.2 mm stretchable



yellow	**793-5501/000-002**	
red	**793-5501/000-005**	
blue	**793-5501/000-006**	
gray	**793-5501/000-007**	
orange	**793-5501/000-012**	
light green	**793-5501/000-017**	
green	**793-5501/000-023**	
violet	**793-5501/000-024**	
		5

WMB Inline, plain, 1,500 WMB markers (5 mm) per reel, 5 … 5.2 mm stretchable



white	**2009-115**	1

Marking strip, plain, 11 mm wide, 50 m reel



white	**2009-110**	1

Screwless end stop, for DIN-35 rail, 6 mm wide



gray	**249-116**	100 (4x25)

Overview of certification organizations, see page 654

0.25 ... 2.5 (4) mm² ❶	22 ... 12 AWG
630 V ❷	600 V, 20 A
I_N 20 A	600 V, 20 A

Terminal block width 5.2 mm / 0.205 inch

10 ... 12 mm / 0.39 ... 0.47 inch

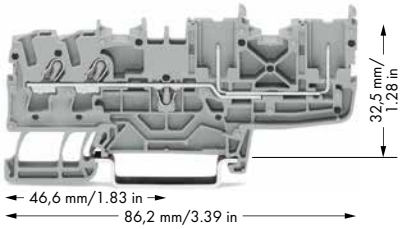

❶ Conductor range: 0.25 ... 4 mm² "s + f-st"; Push-in termination: 0.75 ... 4 mm² "s" and 0.75 ... 2.5 mm² "insulated ferrule, 12 mm"

❷ 630 V = rated voltage for Ex nA applications (see Section 14)

❸ See application notes for:
Colored push-in type jumper bar, page 134
Staggered jumper, page 136
Push-in type wire jumper, page 138

	Item No.	Pack. Unit
2-conductor/2-pin carrier terminal block, suitable for Ex nA applications		
gray	**2022-1401/999-953**	50
blue	**2022-1404/999-953**	50
2-conductor/2-pin ground carrier terminal block, suitable for Ex nA applications		
green-yellow	**2022-1407/999-953**	50

Item-Specific Accessories

End and intermediate plate, 1 mm thick			
	orange	**2022-1492**	100 (4x25)
	gray	**2022-1491**	100 (4x25)



630 V = rated voltage for use in Zone 2 hazardous areas, "nA" type of protection

"n" refers to an ignition protection class in Zone 2:
This zone covers areas in which a dangerous, explosive atmosphere consisting of gases, vapors or dust is unlikely to exist and will only persist for a short period if it does.

"A" means: non-sparking (function modules without relays/switches)

Ex marking:
"Ex" sign and extended item number ".../999 953" are printed on the side of both carrier terminal blocks and female plugs with Ex approval.
Shorter locking lever (factory-mounted) makes accidental disconnection more difficult.

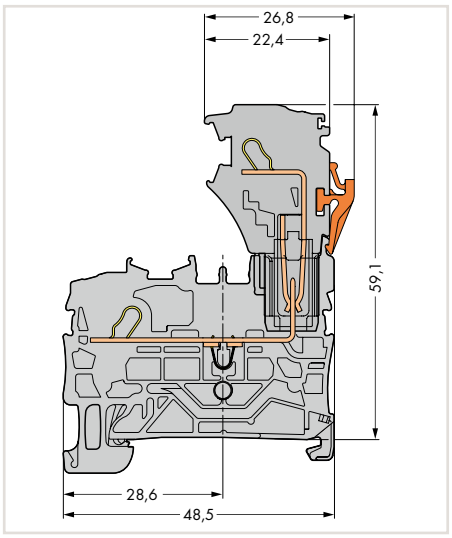

Carrier terminal block

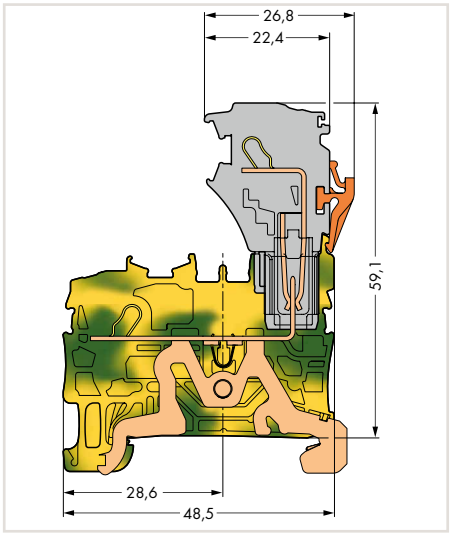

Ground carrier terminal block

X-COM®S-SYSTEM
1-Conductor/1-Pin Double-Deck Carrier Terminal Blocks for Ex nA Applications
2.5 (4) mm², 2022 Series

2

0.25 … 2.5 (4) mm² ❶ | 22 … 12 AWG 630 V ❷ | 600 V, 20 A I_N 20 A ❸ | 600 V, 20 A Terminal block width 5.2 mm / 0.205 inch 10 … 12 mm / 0.39 … 0.47 inch	0.25 … 2.5 (4) mm² ❶ | 22 … 12 AWG 630 V ❷ | 600 V, 20 A I_N 20 A ❸ | 600 V, 20 A Terminal block width 5.2 mm / 0.205 inch 10 … 12 mm / 0.39 … 0.47 inch	0.25 … 2.5 (4) mm² ❶ | 22 … 12 AWG Terminal block width 5.2 mm / 0.205 inch 10 … 12 mm / 0.39 … 0.47 inch

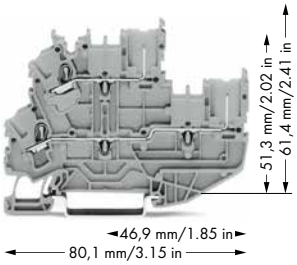

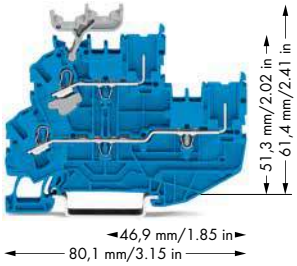

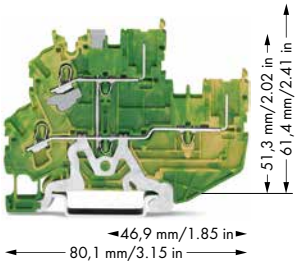

Item No.		Pack. Unit
1-conductor/1-pin double-deck carrier terminal block, through/through terminal block, without marker carrier, gray housing, suitable for Ex nA applications		
L/L	**2022-2201/999-953**	50

Item No.		Pack. Unit
1-conductor/1-pin double-deck carrier terminal block, through/through terminal block, with marker carrier, blue housing, suitable for Ex nA applications		
N/N	**2022-2234/999-953**	50

Item No.		Pack. Unit
2-conductor/2-pin double-deck carrier terminal block, 2-conductor/2-pin ground conductor terminal block, without marker carrier, internally commoned, green-yellow housing, suitable for Ex nA applications		
PE	**2022-2207/999-953**	50

Overview of certification organizations, see page 654

❶ Conductor range: 0.25 … 4 mm² "s + f-st"; Push-in termination: 0.75 … 4 mm² "s" and 0.75 … 2.5 mm² "insulated ferrule, 12 mm"

❷ 630 V = rated voltage for Ex nA applications (see Section 14)

❸ with double-deck vertical jumper 19 A

❹ See application notes
Colored push-in type jumper bar, page 134
Vertical jumper, page 139

2022 Series Accessories

Appropriate marking systems: WMB/WMB Inline/Marking strips (see Section 13)

End and intermediate plate, 1 mm thick



orange	**2022-2292**	100 (4x25)
gray	**2022-2291**	100 (4x25)

Insulation stop, 5 pcs/strip, 0.25 … 0.5 mm²



light gray	**2002-171**	200 (8x25)

Insulation stop, 5 pcs/strip, 0.75 … 1 mm²



dark gray	**2002-172**	200 (8x25)

Push-in type jumper bar, insulated, I_N 25 A, light gray ❹



2-way	**2002-402**	200 (8x25)
3-way	**2002-403**	200 (8x25)
4-way	**2002-404**	200 (8x25)
5-way	**2002-405**	100 (4x25)
6-way	**2002-406**	100 (4x25)
7-way	**2002-407**	100 (4x25)
8-way	**2002-408**	100 (4x25)
9-way	**2002-409**	100 (4x25)
10-way	**2002-410**	100 (4x25)

Push-in type jumper bar, insulated, I_N 25 A, light gray



from 1 to 3	**2002-433**	200 (8x25)
from 1 to 4	**2002-434**	200 (8x25)
from 1 to 5	**2002-435**	100 (4x25)
from 1 to 6	**2002-436**	100 (4x25)
from 1 to 7	**2002-437**	100 (4x25)
from 1 to 8	**2002-438**	100 (4x25)
from 1 to 9	**2002-439**	100 (4x25)
from 1 to 10	**2002-440**	100 (4x25)

Double-deck vertical jumper, insulated, I_N 24 A ❹

light gray	**2002-492**	100 (4x25)
orange	**2002-492/000-012**	

Carrier with 6 coding pins, for coding female plugs



orange	**2022-100**	100 (4x25)

Test pin, 1 mm Ø



	859-500	1

Protective warning marker, with black high-voltage symbol, for 5 terminal blocks



yellow	**2002-115**	100 (4x25)

Double-deck marker carrier, pivoting



gray	**2002-121**	50 (2x25)

WMB Multi marking system, white, 10 strips with 10 markers per card, 5 … 5.2 mm stretchable

plain	**793-5501**	5

WMB Multi marking system, plain, 10 strips with 10 markers per card, 5 … 5.2 mm stretchable



yellow	**793-5501/000-002**	
red	**793-5501/000-005**	
blue	**793-5501/000-006**	
gray	**793-5501/000-007**	
orange	**793-5501/000-012**	
light green	**793-5501/000-017**	
green	**793-5501/000-023**	
violet	**793-5501/000-024**	
		5

WMB Inline, plain, 1,500 WMB markers (5 mm) per reel, 5 … 5.2 mm stretchable



white	**2009-115**	1

Marking strip, plain, 11 mm wide, 50 m reel



white	**2009-110**	1

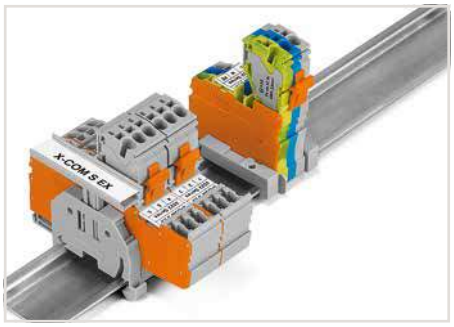

Group marking with height-adjustable group marker carrier (2009-163)

PUSH-IN CAGE CLAMP®

X-COM®S-SYSTEM
1-Conductor Female Plugs for Ex nA Applications
2.5 (4) mm², 2022 Series

2

0.25 … 2.5 (4) mm² ❶	22 … 12 AWG
630 V ❷	600 V, 20 A
I_N 20 A	600 V, 20 A

Module width 5.2 mm / 0.205 inch
10 … 12 mm / 0.39 … 0.47 inch



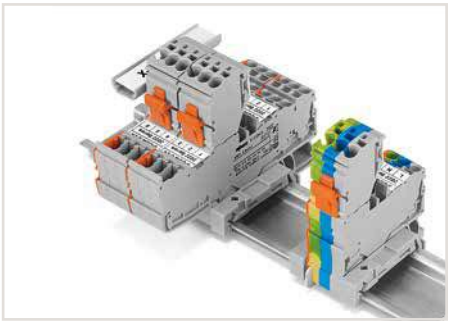

Each female plug is supplied with a locking lever.

❶ Conductor range: 0.25 … 4 mm² "s + f-st"; Push-in termination: 0.75 … 4 mm² "s" and 0.75 … 2.5 mm² "insulated ferrule, 12 mm"

❷ 630 V = rated voltage for Ex nA applications (see Section 14)

Pole No.	Item No.	Pack. Unit
1-conductor female plug with shorter locking lever, suitable for Ex nA applications, for insertion into carrier terminal blocks, with coding fingers, gray		
According to EN 61984, connectors without current interrupting capacity shall not be mated and unmated when live or under load.		
2	**2022-102/999-953**	200
3	**2022-103/999-953**	100
4	**2022-104/999-953**	100
5	**2022-105/999-953**	50
6	**2022-106/999-953**	50
7	**2022-107/999-953**	50
8	**2022-108/999-953**	50

Accessories

Appropriate marking systems: (see Section 13)

Insulation stop, 5 pcs/strip, 0.25 … 0.5 mm²			
	light gray	**2002-171**	200 (8x25)
Insulation stop, 5 pcs/strip, 0.75 … 1 mm²			
	dark gray	**2002-172**	200 (8x25)
Protective warning marker, with black high-voltage symbol, for 5 terminal blocks			
	yellow	**2002-115**	100 (4x25)
Carrier with 6 coding pins, for coding female plugs			
	orange	**2022-100**	100 (4x25)
Strain relief plate, gray			
	35 mm wide	**734-326**	100 (4x25)
	6 mm wide	**734-327**	100 (4x25)
	12.5 mm wide	**734-328**	100 (4x25)
	25 mm wide	**734-329**	100 (4x25)
	55 mm wide	**734-430**	50 (2x25)
	75 mm wide	**734-431**	50 (2x25)
WMB Multi marking system, white, 10 strips with 10 markers per card, 5 … 5.2 mm stretchable			
	plain	**793-5501**	5
WMB Inline, plain, 1,500 WMB markers (5 mm) per reel, 5 … 5.2 mm stretchable			
	white	**2009-115**	1
Marking strip, plain, 11 mm wide, 50 m reel			
	white	**2009-110**	1



Coding a female plug: remove coding finger using a suitable tool.

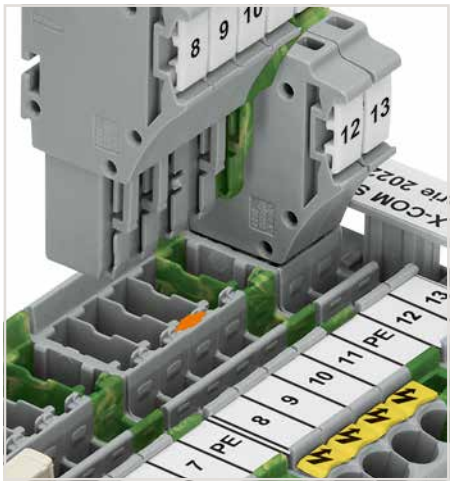

Insert a coding pin (2022 100) into the corresponding location of the carrier terminal block.

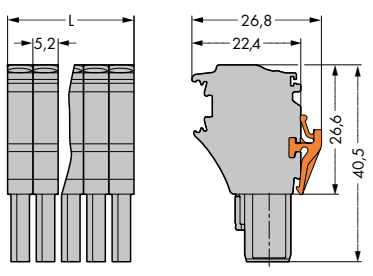

L = pole no. x module width

Dimensions in mm

Overview of certification organizations, see page 654

PUSH-IN CAGE CLAMP®

X-COM®S-SYSTEM
Pre-Assembled 1-Conductor Female Plugs for Ex nA Applications
2.5 (4) mm², 2022 Series

0.25 … 2.5 (4) mm² ❶	22 … 12 AWG
630 V ❷	600 V, 20 A
I_N 20 A	600 V, 20 A
Module width 5.2 mm / 0.205 inch	
10 … 12 mm / 0.39 … 0.47 inch	

0.25 … 2.5 (4) mm² ❶	22 … 12 AWG
630 V ❷	600 V, 20 A
I_N 20 A	600 V, 20 A
Module width 5.2 mm / 0.205 inch	
10 … 12 mm / 0.39 … 0.47 inch	





❶ Conductor range: 0.25 … 4 mm² "s + f-st"; Push-in termination: 0.75 … 4 mm² "s" and 0.75 … 2.5 mm² "insulated ferrule, 12 mm"

❷ 630 V = rated voltage for Ex nA applications (see Section 14)

Pole No.	Item No.	Pack. Unit
1-conductor female plug with shorter locking lever, with ground base module (green-yellow), suitable for Ex nA applications, for insertion into carrier terminal blocks, with coding fingers		
3	**2022-103/000-038/999-953**	100
4	**2022-104/000-038/999-953**	100
5	**2022-105/000-038/999-953**	50
6	**2022-106/000-038/999-953**	50

Pole No.	Item No.	Pack. Unit
1-conductor female plug with shorter locking lever, with ground end module (green-yellow), suitable for Ex nA applications, for insertion into carrier terminal blocks, with coding fingers		
3	**2022-103/000-039/999-953**	100
4	**2022-104/000-039/999-953**	100
5	**2022-105/000-039/999-953**	50
6	**2022-106/000-039/999-953**	50



Ex marking:
"Ex" sign and extended item number ".../999 953" are printed on the side of both carrier terminal blocks and female plugs with Ex approval.
Shorter locking lever (factory-mounted) makes accidental disconnection more difficult.

Accessories Female Plugs

Appropriate marking systems: WMB/WMB Inline/Marking strips (see Section 13)

Insulation stop, 5 pcs/strip, 0.25 … 0.5 mm²			
	light gray	**2002-171**	200 (8x25)
Insulation stop, 5 pcs/strip, 0.75 … 1 mm²			
	dark gray	**2002-172**	200 (8x25)
Protective warning marker, with black high-voltage symbol, for 5 terminal blocks			
	yellow	**2002-115**	100 (4x25)
Strain relief plate, gray			
	35 mm wide	**734-326**	100 (4x25)
	6 mm wide	**734-327**	100 (4x25)
	12.5 mm wide	**734-328**	100 (4x25)
	25 mm wide	**734-329**	100 (4x25)
	55 mm wide	**734-430**	50 (2x25)
	75 mm wide	**734-431**	50 (2x25)

WMB Multi marking system, white, 10 strips with 10 markers per card, 5 … 5.2 mm stretchable			
	plain	**793-5501**	5
WMB Inline, plain, 1,500 WMB markers (5 mm) per reel, 5 … 5.2 mm stretchable			
	white	**2009-115**	1
Marking strip, plain, 11 mm wide, 50 m reel			
	white	**2009-110**	1

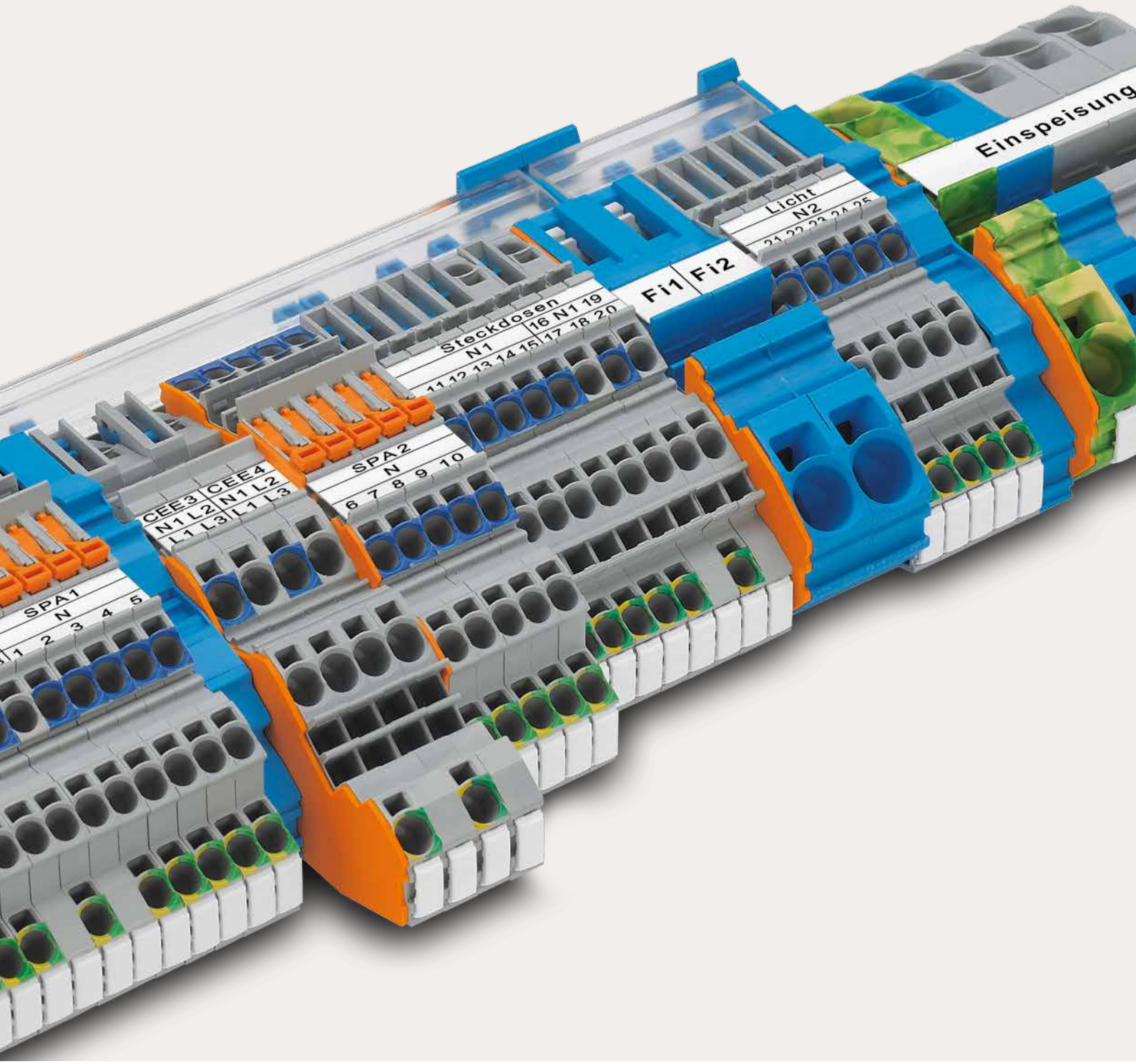

Installation Rail-Mount Terminal Blocks, TOPJOB® S

PUSH-IN CAGE CLAMP®

Installation Rail-Mount Terminal Blocks, TOPJOB® S with Push-in CAGE CLAMP® Connection

Front-Entry Wiring

			Page
	**Multilevel Installation Terminal Blocks with N-Disconnect Slide Links** 0.25 … 2.5 (4) mm² (22 … 12 AWG)	2003 Series	188
	**Multilevel Installation Terminal Blocks with Internal N-Disconnection** 0.25 … 2.5 (4) mm² (22 … 12 AWG)	2003 Series	190
	**Multilevel Installation Terminal Blocks with N-Disconnect Slide Links** 0.5 … 4 (6) mm² (20 … 10 AWG)	2005 Series	194
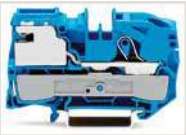	**N-Conductor and Power Distribution Disconnect Terminal Blocks** 0.5 … 16 (25 “f-st”) mm² (20 … 4 AWG)	2002/2006/2016 Series	196
	**Distribution Supply Terminal Blocks** 0.5 … 16 (25 “f-st”) mm² (20 … 4 AWG)	2016 Series	198

3

PUSH-IN CAGE CLAMP®

TOPJOB® S
Installation Rail-Mount Terminal Blocks
Installation



Inserting conductors via push-in termination.
Solid conductors with cross-sections from either one size above, or up to two sizes below, the rated cross-section can be simply pushed in – no tools needed.

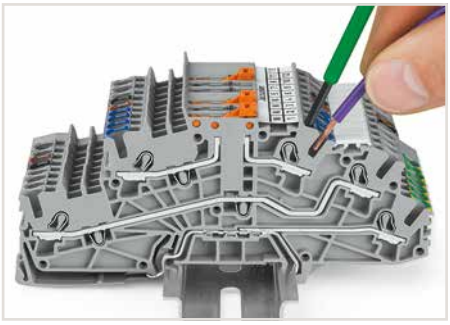

Inserting a conductor via operating tool.
Connecting fine-stranded conductors without ferrules, or small cross-sectional conductors that cannot be pushed in, is performed similarly to the original CAGE CLAMP® – just use an operating tool.

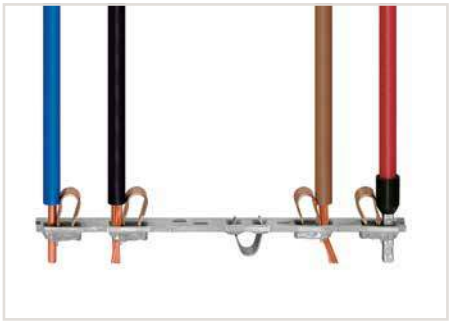

All conductor types at a glance

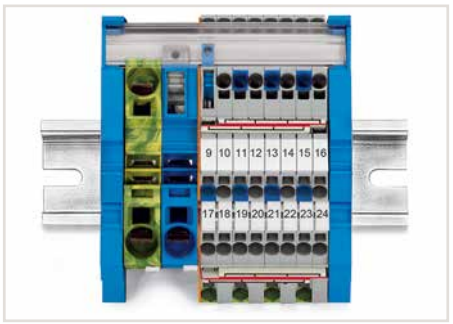

Mounting busbars on busbar carriers: Insert busbar ends onto large busbar carriers (2009-305) or onto supply terminal blocks with an integrated busbar carrier.

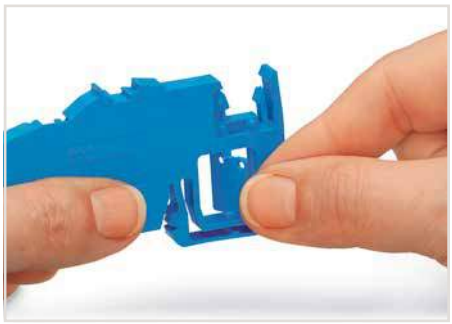

Removing the separator plate from the busbar carrier or from the N-disconnect terminal block.

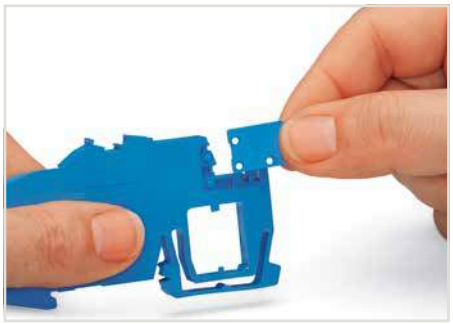

Inserting the separator plate into the busbar carrier to protect the N-busbar against accidental contact.



Inserting separator plate removed from N-disconnect terminal block.

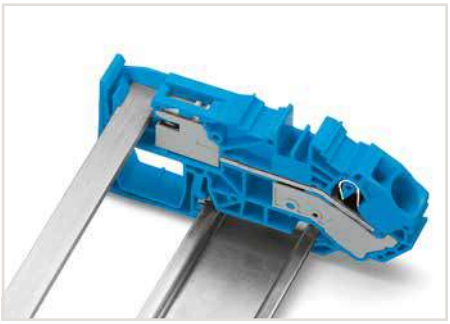

Touch-proof N-busbar via inserted separator plate

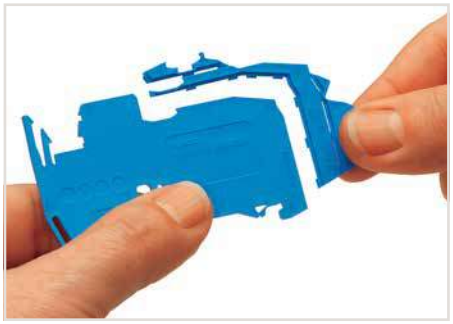

Perforations make it possible to fit the carrier to all TOPJOB® S Installation Rail-Mount Terminal Blocks using a single part.

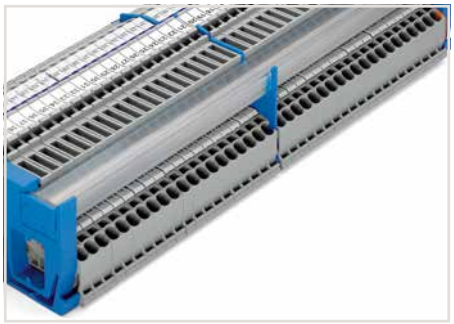

The compact busbar carrier (1.5 mm thick), which is placed every 200 mm, provides additional busbar support for longer assemblies.

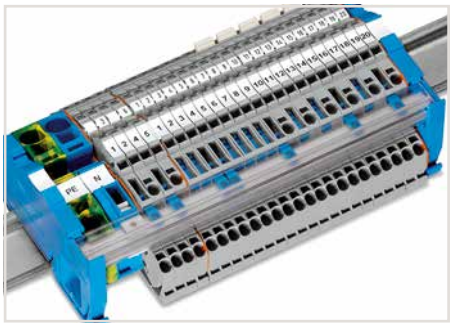

The busbar transparent cover (Item No. 777-303) protects the busbar against accidental contact and makes it easy to see which terminal blocks are connected to the busbar.



N-potential disconnection within a rail assembly via N-disconnect slide link



Push-in CAGE CLAMP® terminates the following copper conductors:
solid



stranded



fine-stranded, also with tinned single strands

PUSH-IN CAGE CLAMP®

TOPJOB® S
Installation Rail-Mount Terminal Blocks
Installation

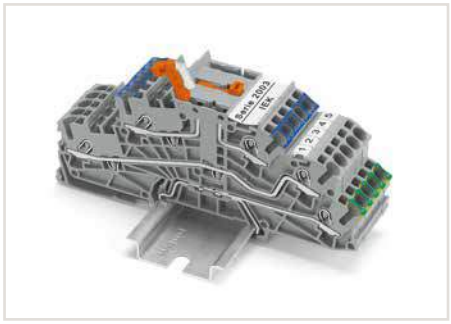

N-potential disconnection via N-knife disconnect within a terminal block assembly without a busbar.

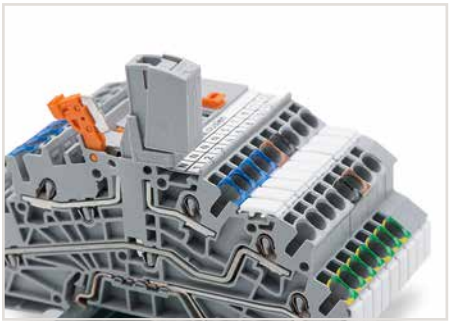

For multilevel installation terminal blocks with internal N-disconnection, test plug adapters can be inserted into the free vertical test slot when the N-potential is disconnected.

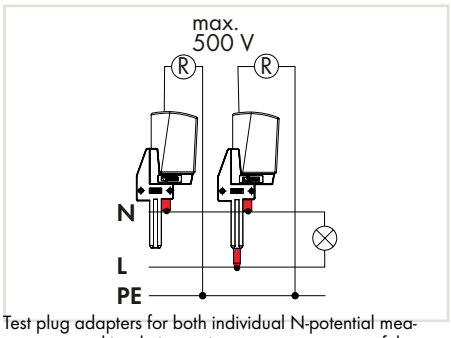

Test plug adapters for both individual N-potential measurement and insulation resistance measurement of the connected N- and L-potentials are available.

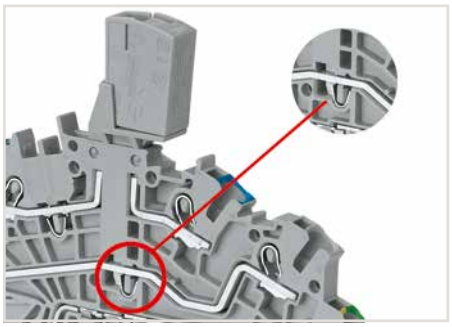

Multilevel installation terminal block fitted with an N/L-test plug adapter for quick and safe insulation resistance measurement of the connected N- and L-potentials

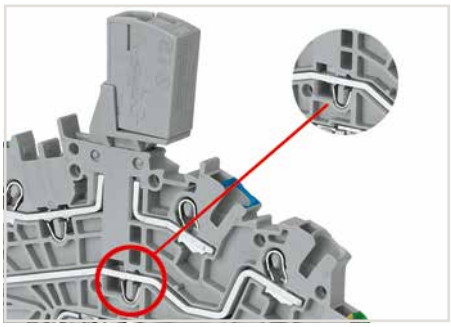

Multilevel installation terminal block fitted with an N-test plug adapter for insulation resistance measurement of the N-potential

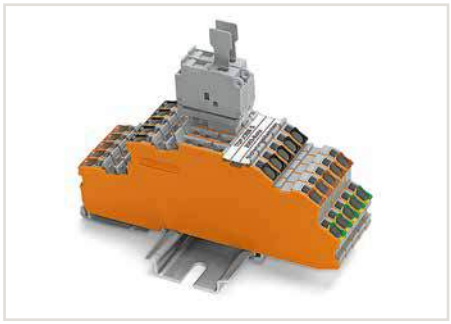

Single-fuse plugs can be used in combination with 1 mm thick end and intermediate plates on carrier terminal blocks without N-knife disconnect.



Double-fuse plugs with (5 x 25) mm miniature metric fuses can be used on carrier terminal blocks without N-knife disconnect in standard terminal block width.



fine-stranded, tip-bonded



fine-stranded, with ferrule (gastight crimped)



fine-stranded, with pin terminal (gastight crimped)

TOPJOB® S
Multilevel Installation Terminal Blocks with N-Disconnect Slide Links
2.5 (4) mm², 2003 Series

0.25 … 2.5 (4) mm² ❶ | 22 … 12 AWG
250 V/4 kV/3; 32 A (32 A) ❷ ❸
400 V/6 kV/3; 32 A (32 A) ❷ ❹

Terminal block width 5.2 mm / 0.205 inch
10 … 12 mm / 0.39 … 0.47 inch

0.25 … 2.5 (4) mm² ❶ | 22 … 12 AWG
400 V/6 kV/3 ❷
I_N 32 A

Terminal block width 5.2 mm / 0.205 inch
10 … 12 mm / 0.39 … 0.47 inch

For the construction and operation of power installations in fire-prone, hazardous locations or public buildings – such as conference centers, stores, hospitals, schools, theaters or hotels – the DIN VDE 0100-710 or DIN VDE 0100-718 standards shall be observed. DIN VDE 0100-482 shall also be observed for fire-prone, hazardous locations. These VDE regulations mandate that every neutral conductor must be provided with a disconnection device so, e.g., insulation resistance measurement is possible for every circuit without disconnecting the N-conductor.
WAGO N-disconnect terminal blocks meet this requirement.

3

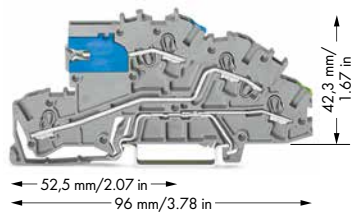

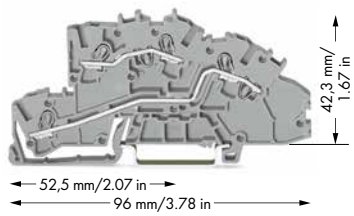

	Item No.	Pack. Unit
Multilevel installation terminal block, with N-disconnect slide link, gray		
◯ NT/L/PE	**2003-7641**	50

	Item No.	Pack. Unit
Multilevel installation terminal block, gray		
◯ L/L	**2003-7642**	50
◯ N/L	**2003-7649**	50

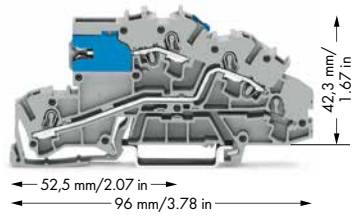

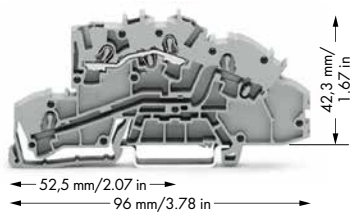

	Item No.	Pack. Unit
Multilevel installation terminal block, with N-disconnect slide link, gray		
◯ NT/L	**2003-7640**	50
◯ LT/L	**2003-7659**	50
Multilevel installation terminal block, gray		
◯ N/L/PE	**2003-7646**	50
◯ L/L/PE	**2003-7645**	50

	Item No.	Pack. Unit
Multilevel installation terminal block, gray		
◯ L	**2003-7650**	50
◯ N	**2003-7651**	50

2003 Series Accessories

Appropriate marking systems: WMB/WMB Inline/Marking strips (see Section 13)

Busbar carrier, not suitable as end stop, snaps onto DIN-35 rail, 1.5 mm thick



blue **2009-304** 100 (4x25)

Busbar carrier, can replace end bracket, with detachable separator plate, snaps onto DIN-35 rail, 7.5 mm thick



blue **2009-305** 25

End and intermediate plate, 0.8 mm thick



orange **2003-7692** 100 (4x25)

Busbar cover, 1000 mm long



transparent **777-303** 1

Accessories

Straight busbar, tin-plated, 1000 mm long, copper (10 x 3) mm



I_N 140 A **210-133** 1

N-supply terminal block, I_N 76 A, 16 mm², 12 mm wide



blue **2016-7714** 20

Ground supply terminal block, 16 mm², 12 mm wide



green-yellow **2016-7607** 20

Connector, for N-busbar, with blue cover, 2.5 … 16 mm²



blue **210-281** 100 (2x50)

Connector, for N-busbar, 2.5 … 35 mm²



unplated **209-105** 50

Lock-out, prevents reclosing of slide link, snap-on type



orange **2003-7300** 100 (4x25)

Insulation stop, 5 pcs/strip, 0.25 … 0.5 mm²



light gray **2002-171** 200 (8x25)

Insulation stop, 5 pcs/strip, 0.75 … 1 mm²



dark gray **2002-172** 200 (8x25)

Test plug, with 500 mm cable, 2 mm Ø, max. 42 V



red **210-136** 50

Test plug, with 500 mm cable, 2.3 mm Ø, max. 42 V



yellow **210-137** 50

Overview of certification organizations, see page 654

PUSH-IN CAGE CLAMP®

TOPJOB® S
Multilevel Installation Terminal Block Accessories

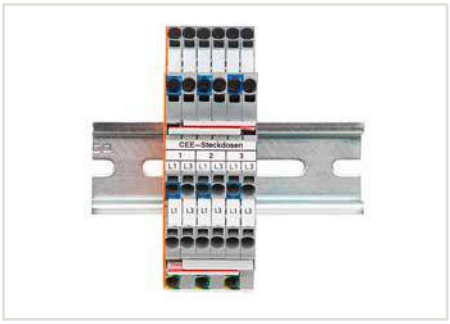

Commoning two potentials in one single jumper slot via extremely slim staggered jumpers.

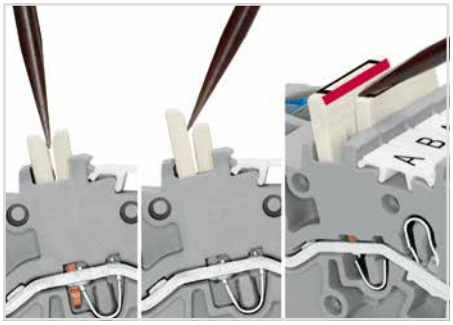

Insert the operating tool between the staggered jumpers, then lift up the jumper.

❶ Conductor range: 0.25 … 4 mm² "s + f-st"; Push-in termination: 0.75 … 4 mm² "s" and 0.75 … 2.5 mm² "insulated ferrules, 12 mm"

❷ 250 V/ 400 V = rated voltage
4 kV/ 6 kV = rated surge voltage
3 = pollution degree
(see Section 14)

❸ 250 V/4 kV potential – ground

❹ 400 V/6 kV potential – potential

❺ See application notes for:
Colored push-in type jumper bar, page 134
Push-in type wire jumper, page 138
Staggered jumper, page 136
Adjacent jumper for continuous commoning, page 137

3

Accessories Multilevel Installation Terminal Block

Push-in type jumper bars and staggered jumpers, see 2002 Series

Push-in type jumper bar, insulated, I_N 25 A, light gray ❺



2-way	**2002-402**	200 (8x25)
3-way	**2002-403**	200 (8x25)
4-way	**2002-404**	200 (8x25)
5-way	**2002-405**	100 (4x25)
6-way	**2002-406**	100 (4x25)
7-way	**2002-407**	100 (4x25)
8-way	**2002-408**	100 (4x25)
9-way	**2002-409**	100 (4x25)
10-way	**2002-410**	100 (4x25)

Push-in type jumper bar, insulated, I_N 25 A, light gray



from 1 to 3	**2002-433**	200 (8x25)
from 1 to 4	**2002-434**	200 (8x25)
from 1 to 5	**2002-435**	100 (4x25)
from 1 to 6	**2002-436**	100 (4x25)
from 1 to 7	**2002-437**	100 (4x25)
from 1 to 8	**2002-438**	100 (4x25)
from 1 to 9	**2002-439**	100 (4x25)
from 1 to 10	**2002-440**	100 (4x25)

Push-in type wire jumper, insulated, I_N 16 A, wire size ❺



1.5 mm²

L = 60 mm	**2009-412**	100 (10x10)
L = 110 mm	**2009-414**	100 (10x10)
L = 250 mm	**2009-416**	100 (10x10)

Test plug adapter, for 4 mm Ø test plug



gray	**2009-174**	100 (4x25)

Banana plug, for 4 mm socket diameter, color mixed, 10 x



orange, white, black, blue, yellow

	215-111	50

Testing tap, for max. 2.5 mm²



gray	**2009-182**	100 (4x25)

Operating tool, 3.5 mm and 5.5 mm blade width, for



TOPJOB® S installation terminal blocks

	2009-310	1

Staggered jumper, insulated, I_N 25 A, light gray ❺



2-way	**2002-472**	100 (4x25)
3-way	**2002-473**	100 (4x25)
4-way	**2002-474**	100 (4x25)
5-way	**2002-475**	50 (2x25)
6-way	**2002-476**	50 (2x25)
7-way	**2002-477**	50 (2x25)
8-way	**2002-478**	50 (2x25)
9-way	**2002-479**	50 (2x25)
10-way	**2002-480**	50 (2x25)
11-way	**2002-481**	50 (2x25)
12-way	**2002-482**	50 (2x25)

Customized staggered jumper, insulated, with contact lugs



broken off at the factory and circuit printing, I_N 25 A, light gray

1-3	**2002-473/011-000**	
		100 (4x25)
1-3-5	**2002-475/011-000**	
1-3-5-7	**2002-477/011-000**	
1-3-5-7-9	**2002-479/011-000**	
1-3-5-7-9-11	**2002-481/011-000**	
		50 (2x25)

Adjacent jumper for continuous commoning, insulated, I_N ❺

25 A, light gray

2-way	**2002-400**	100 (4x25)

WMB Multi marking system, white, 10 strips with 10 markers per card, 5 … 5.2 mm stretchable

plain	**793-5501**	5

WMB Inline, plain, 1,500 WMB markers (5 mm) per reel, 5 … 5.2 mm stretchable



white	**2009-115**	1

Marking strip, plain, 11 mm wide, 50 m reel



white	**2009-110**	1

Operating tool, 3.5 mm and 2.5 mm blade width, for



TOPJOB® S installation terminal blocks

	2009-309	1

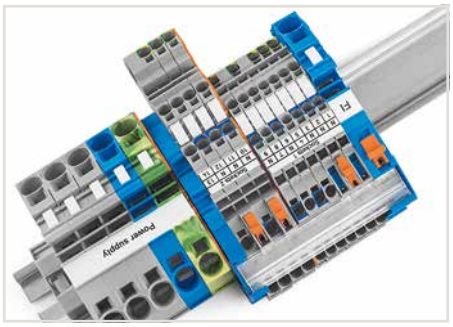

TOPJOB® S – Terminal Blocks for Every Application

- Push-in termination of solid conductors in small distribution boards saves time and money.
- Operating errors can be prevented as all TOPJOB® S Terminal Blocks for building installations are equipped with push-in connection technology.
- The use of standard accessories reduces order-processing and warehousing costs.
- The busbar position is the same, making TOPJOB® S Installation Terminal Blocks compatible with standard TOPJOB® Installation Terminal Blocks.

Application note:
N-disconnect slide links, used in installation terminal blocks, consist of switch contacts that are opened and then closed as part of the regular circuit testing. To guarantee a reliable connection, a corrosion-resistant contact area is required on the N-busbar.

Historically, uninsulated copper busbars, that have been cleaned/stripped of any possible corrosion prior to install, can be used in dry, pollution-free locations.

According to DIN VDE 0100-520 (VDE 0100, Part 520), installation equipment exposed to contamination or corrosive substances (e.g., water) that promote corrosion or deterioration, must be protected or made of a corrosion- or wear-resistant material. In these cases, tinned copper busbars guarantee a reliable connection.

WAGO only offers tinned copper busbars.

TOPJOB® S
Multilevel Installation Terminal Blocks with Internal N-Disconnection
2.5 (4) mm², 2003 Series

0.25 … 2.5 (4) mm² ❶ | 22 … 12 AWG 250 V/4 kV/3; 20 A (25 A) ❷ ❸ 400 V/6 kV/3; 20 A (25 A) ❷ ❹ Terminal block width 5.2 mm / 0.205 inch 10 … 12 mm / 0.39 … 0.47 inch	0.25 … 2.5 (4) mm² ❶ | 22 … 12 AWG 400 V/6 kV/3 ❷ I_N 24 A (28 A) Terminal block width 5.2 mm / 0.205 inch 10 … 12 mm / 0.39 … 0.47 inch	0.25 … 2.5 (4) mm² ❶ | 22 … 12 AWG 250 V/4 kV/3; 24 A (28 A) ❷ ❸ 400 V/6 kV/3; 24 A (28 A) ❷ ❹ Terminal block width 5.2 mm / 0.205 inch 10 … 12 mm / 0.39 … 0.47 inch

3

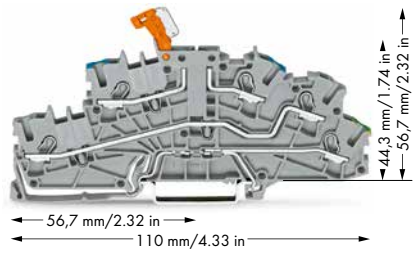

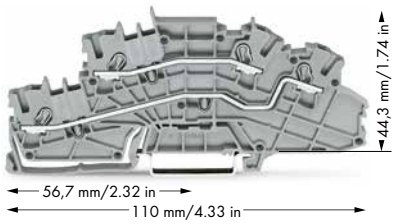

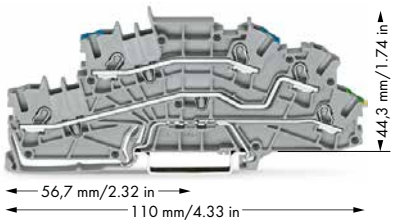

Item No.		Pack. Unit
Multilevel installation terminal block, with pivoting knife disconnect, gray		
◯ NTi/L/PE	**2003-6641**	50
◯ LTi/L/PE	**2003-6644**	50

Item No.		Pack. Unit
Multilevel installation terminal block, gray		
◯ L/L	**2003-6642**	50
◯ N/L	**2003-6649**	50

Item No.		Pack. Unit
Multilevel installation terminal block, gray		
◯ N/L/PE	**2003-6646**	50
◯ L/L/PE	**2003-6645**	50

Item-Specific Accessories

Test plug adapter N/L, for vertical test slot, gray			
	2-pole	**2003-499**	100 (4x25)
Test plug adapter N, for vertical test slot, gray			
	1-pole	**2003-500**	100 (4x25)

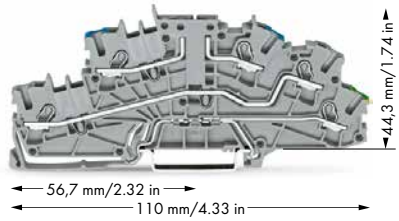

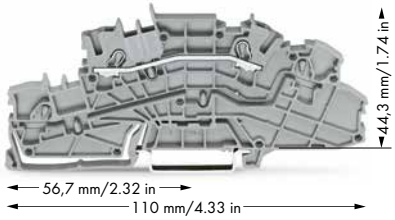

Item No.		Pack. Unit
Multilevel installation terminal block, carrier terminal block without knife disconnect, gray, I_N 10 A Maximum current depends on accessories used.		
◯ N/L/PE	**2003-6640**	50
Black upper-deck, brown middle-deck, green-yellow lower-deck printing		
◯ P2/P1/PE	**2003-6643**	50
Brown upper-deck, black middle-deck, green-yellow lower-deck printing		
◯ P1/P2/PE	**2003-6660**	50

Item No.		Pack. Unit
Multilevel installation terminal block, gray		
◯ L	**2003-6650**	50
◯ N	**2003-6651**	50

Item-Specific Accessories

Fuse plug with pull-tab, for (5 x 20) mm miniature metric fuses Electrical ratings are given by the fuse.			
	gray	**2004-911**	50
End and intermediate plate, only for use with fuse plugs, 1 mm thick			
	orange	**2003-6693**	100 (4x25)

Overview of certification organizations, see page 654

PUSH-IN CAGE CLAMP®

TOPJOB® S
Multilevel Installation Terminal Block Accessories

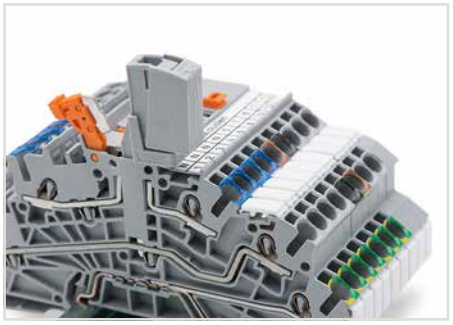

For multilevel installation terminal blocks with internal N-disconnection, test plug adapters can be inserted into the free vertical test slot when the N-potential is disconnected.

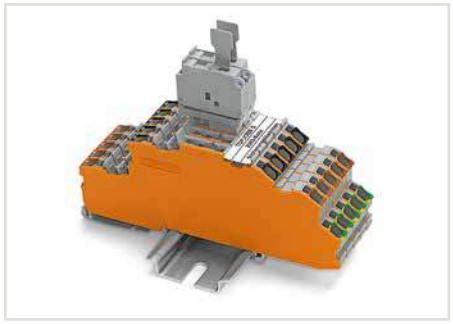

Single-fuse plugs can be used in combination with 1 mm thick end and intermediate plates on carrier terminal blocks without N-knife disconnect.

❶ Conductor range: 0.25 ... 4 mm² "s + f-st";
Push-in termination: 0.75 ... 4 mm² "s"
and 0.75 ... 2.5 mm²
"insulated ferrules, 12 mm"

❷ 250 V/
400 V = rated voltage
4 kV/
6 kV = rated surge voltage
3 = pollution degree
(see Section 14)

❸ 250 V/4 kV potential – ground

❹ 400 V/6 kV potential – potential

❺ See application notes for:
Colored push-in type jumper bar, page 134
Adjacent jumper for continuous commoning, page 137
Staggered jumper, page 136
Push-in type wire jumper, page 138

3

Accessories Multilevel Installation Terminal Block

Push-in type jumper bars and staggered jumpers, see 2002 Series

End and intermediate plate, for use without fuse plug, 0.8 mm thick

orange	**2003-6692**	100	(4x25)

Busbar carrier, not suitable as end stop, snaps onto DIN-35 rail, 1.5 mm thick

blue	**2009-304**	100	(4x25)

Busbar carrier, can replace end bracket, with detachable separator plate, snaps onto DIN-35 rail, 7.5 mm thick

blue	**2009-305**		

Push-in type jumper bar, insulated, I_N 25 A, light gray ❹

2-way	**2002-402**	200	(8x25)
3-way	**2002-403**	200	(8x25)
4-way	**2002-404**	200	(8x25)
5-way	**2002-405**	100	(4x25)
6-way	**2002-406**	100	(4x25)
7-way	**2002-407**	100	(4x25)
8-way	**2002-408**	100	(4x25)
9-way	**2002-409**	100	(4x25)
10-way	**2002-410**	100	(4x25)

Push-in type jumper bar, insulated, I_N 25 A, light gray

from 1 to 3	**2002-433**	200	(8x25)
from 1 to 4	**2002-434**	200	(8x25)
from 1 to 5	**2002-435**	100	(4x25)
from 1 to 6	**2002-436**	100	(4x25)
from 1 to 7	**2002-437**	100	(4x25)
from 1 to 8	**2002-438**	100	(4x25)
from 1 to 9	**2002-439**	100	(4x25)
from 1 to 10	**2002-440**	100	(4x25)

Adjacent jumper for continuous commoning, insulated, I_N 25 A, light gray ❺

2-way	**2002-400**	100	(4x25)

Operating tool, 3.5 mm and 2.5 mm blade width, for TOPJOB® S installation terminal blocks

	2009-309	1

Insulation stop, 5 pcs/strip, 0.25 ... 0.5 mm²

light gray	**2002-171**	200	(8x25)

Insulation stop, 5 pcs/strip, 0.75 ... 1 mm²

dark gray	**2002-172**	200	(8x25)

Staggered jumper, insulated, I_N 25 A, light gray ❺

2-way	**2002-472**	100	(4x25)
3-way	**2002-473**	100	(4x25)
4-way	**2002-474**	100	(4x25)
5-way	**2002-475**	50	(2x25)
6-way	**2002-476**	50	(2x25)
7-way	**2002-477**	50	(2x25)
8-way	**2002-478**	50	(2x25)
9-way	**2002-479**	50	(2x25)
10-way	**2002-480**	50	(2x25)
11-way	**2002-481**	50	(2x25)
12-way	**2002-482**	50	(2x25)

Push-in type wire jumper, insulated, I_N 16 A, wire size 1.5 mm² ❹

L = 60 mm	**2009-412**	100	(10x10)
L = 110 mm	**2009-414**	100	(10x10)
L = 250 mm	**2009-416**	100	(10x10)

WMB Multi marking system, white, 10 strips with 10 markers per card, 5 ... 5.2 mm stretchable

plain	**793-5501**	5

WMB Inline, plain, 1,500 WMB markers (5 mm) per reel, 5 ... 5.2 mm stretchable

white	**2009-115**	1

Marking strip, plain, 11 mm wide, 50 m reel

white	**2009-110**	1

Operating tool, 3.5 mm and 5.5 mm blade width, for TOPJOB® S installation terminal blocks

	2009-310	1

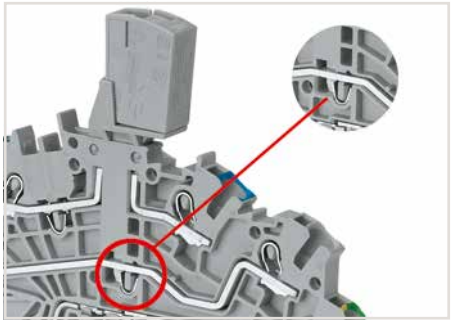

Multilevel installation terminal block fitted with an N/L-test plug adapter for quick and safe insulation resistance measurement of the connected N- and L-potentials

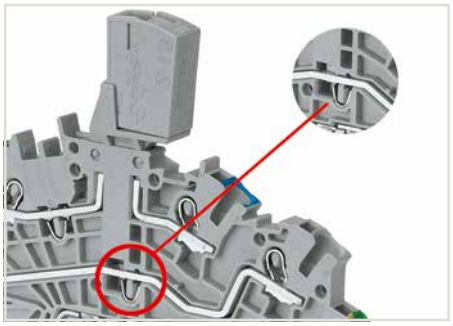

Multilevel installation terminal block fitted with an N-test plug adapter for insulation resistance measurement of the N-potential

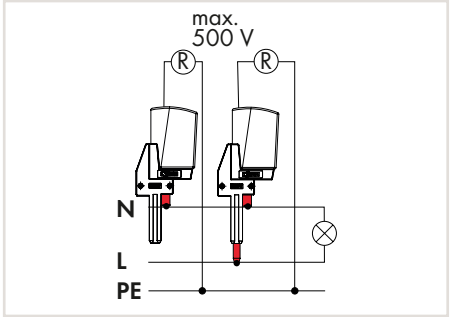

TOPJOB® S
Double-Fuse Plugs (2003 Series) on Carrier Terminal Blocks (2002 and 2003 Series)

Double fuse plug for (5 x 25) mm miniature metric fuse 250 V / I_N 6.3 A Plug width 10.4 mm / 0.409 inch	Double fuse plug for (5 x 25) mm miniature metric fuse 250 V / I_N 6.3 A Plug width 10.4 mm / 0.409 inch





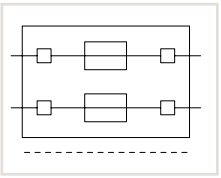

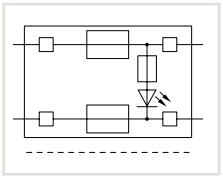

❶ Length of 2002-1661: 66.5 mm / 2.62 inch
2-conductor carrier terminal block

❷ Length of 2002-1761: 76.8 mm / 3.02 inch
3-conductor carrier terminal block

❸ Length of 2002-1861: 87.5 mm / 3.45 inch
4-conductor carrier terminal block

❹ Length of 2002-1961: 72.9 mm / 2.87 inch
2-conductor carrier terminal block with additional jumper position

❺ Length of 2002-2961: 108 mm / 4.25 inch
Double-deck carrier terminal block

❻ Length of 2003-6640: 110 mm / 4.33 inch
Multilevel installation terminal block

Item No.		Pack. Unit
Double-fuse plug, for (5 x 20) mm miniature metric fuse, 10.4 mm wide Electrical ratings are given by the fuse.		
◯ gray	**2003-911**	25

Item No.		Pack. Unit
Double-fuse plug, for (5 x 20) mm miniature metric fuse, with LED, gray Electrical ratings are given by the fuse and blown fuse indication. LED 0.25 mA		
◯ 230 V	**2003-911/1000-923**	25

Accessories

Appropriate marking systems: WMB/Marking strips (see Section 13)

2-conductor carrier terminal block,
❶ 0.25 … 2.5 (4) mm² / 22 … 12 AWG
Terminal block width 5.2 mm / 0.205 inch
gray **2002-1661** 50

End and intermediate plate, 1 mm thick
orange **2002-1692** 100 (4x25)
gray **2002-1691** 100 (4x25)

3-conductor carrier terminal block,
❷ 0.25 … 2.5 (4) mm² / 22 … 12 AWG
Terminal block width 5.2 mm / 0.205 inch
gray **2002-1761** 50

End and intermediate plate, 1 mm thick
orange **2002-1792** 100 (4x25)
gray **2002-1791** 100 (4x25)

4-conductor carrier terminal block,
❸ 0.25 … 2.5 (4) mm² / 22 … 12 AWG
Terminal block width 5.2 mm / 0.205 inch
gray **2002-1861** 50

End and intermediate plate, 1 mm thick
orange **2002-1892** 100 (4x25)
gray **2002-1891** 100 (4x25)

2-conductor carrier terminal block,
❹ 0.25 … 2.5 (4) mm² / 22 … 12 AWG
Terminal block width 5.2 mm / 0.205 inch
gray **2002-1961** 50

End and intermediate plate, 1 mm thick
orange **2002-1992** 100 (4x25)
gray **2002-1991** 100 (4x25)

Double-deck carrier terminal block,
❺ 0.25 … 2.5 (4) mm² / 22 … 12 AWG
Terminal block width 5.2 mm / 0.205 inch
L/L **2002-2961** 50

Double-deck carrier terminal block,
0.25 … 2.5 (4) mm² / 22 … 12 AWG
Terminal block width 5.2 mm / 0.205 inch
L/N **2002-2963** 50

Double-deck carrier terminal block,
0.25 … 2.5 (4) mm² / 22 … 12 AWG
Terminal block width 5.2 mm / 0.205 inch
L/L **2002-2941** 50

End and intermediate plate, 1 mm thick
orange **2002-2992** 100 (4x25)
gray **2002-2991** 100 (4x25)

Accessories

Multilevel installation terminal block, gray
❻ 0.25 … 2.5 (4) mm² / 22 … 12 AWG
Terminal block width 5.2 mm / 0.205 inch
N/L/PE **2003-6640** 50

Multilevel installation terminal block, gray
0.25 … 2.5 (4) mm² / 22 … 12 AWG
Terminal block width 5.2 mm / 0.205 inch
P2/P1/PE **2003-6643** 50

Multilevel installation terminal block, gray
0.25 … 2.5 (4) mm² / 22 … 12 AWG
Terminal block width 5.2 mm / 0.205 inch
P1/P2/PE **2003-6660** 50

End and intermediate plate, 1 mm thick
orange **2003-6692** 100 (4x25)

End and intermediate plate, 1 mm thick, only for use with double-fuse plugs
orange **2003-6694** 100 (4x25)

End plate for fuse terminal blocks, 2 mm thick
orange **2002-992** 100 (4x25)
gray **2002-991** 100 (4x25)

Shorting link, (5 x 20) mm, allows the fuse plug to be used as a disconnect plug
I_N 6.3 A **281-503** 250 (10x25)

WMB Multi marking system, white, 10 strips with 10 markers per card, 5 … 5.2 mm stretchable
plain **793-5501** 5

WMB Multi marking system, plain, 10 strips with 10 markers per card, 5 … 5.2 mm stretchable
yellow **793-5501/000-002**
red **793-5501/000-005**
blue **793-5501/000-006**
gray **793-5501/000-007**
orange **793-5501/000-012**
light green **793-5501/000-017**
green **793-5501/000-023**
violet **793-5501/000-024**
5

Overview of certification organizations, see page 654



Double-fuse plugs with (5 x 25) mm miniature metric fuses can be used on carrier terminal blocks without N-knife disconnect in standard terminal block width.

Miniature metric fuses 5 x 20

Series Item No.	Overload and short circuit protection		Short circuit protection only	
	Individual argmt.	Group argmt.	Individual argmt.	Group argmt.
	Fuse terminal blocks			
2003-911 **2003-911/....-....**	1.6 W	1.6 W	2.5 W	2.5 W

When selecting miniature metric fuses, make sure that the maximum power loss listed above is not exceeded. The power loss is determined according to IEC or EN 60947-7-3/VDE 0611-6 at 23 °C. The temperature rise of the terminal blocks must be checked according to their application and mounting. Higher ambient temperatures place additional strain on fuse cartridges. Therefore, in such applications, the rated current must be reduced if necessary. More details are available from the fuse manufacturers.

TOPJOB® S
Multilevel Installation Terminal Blocks with N-Disconnect Slide Links
4 (6) mm², 2005 Series

0.5 ... 4 (6) mm² ❶ | 20 ... 10 AWG 250 V/4 kV/3; 36 A (36 A) ❷ ❸ 400 V/6 kV/3; 36 A (36 A) ❷ ❹ Terminal block width 6.2 mm / 0.244 inch 11 ... 13 mm / 0.43 ... 0.51 inch	0.5 ... 4 (6) mm² ❶ | 20 ... 10 AWG 400 V/6 kV/3 ❷ I_N 36 A Terminal block width 6.2 mm / 0.244 inch 11 ... 13 mm / 0.43 ... 0.51 inch

3

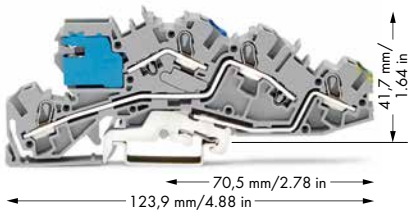

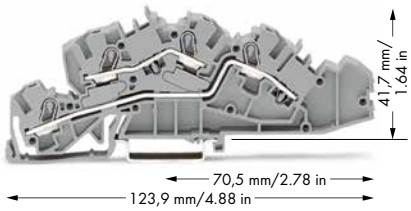

	Item No.	Pack. Unit
Multilevel installation terminal block, with N-disconnect slide link, gray		
◯ NT/L/PE	**2005-7641**	50

	Item No.	Pack. Unit
Multilevel installation terminal block, gray		
◯ L/L	**2005-7642**	50
◯ N/L	**2005-7649**	50

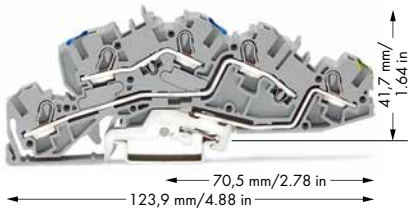

	Item No.	Pack. Unit
Multilevel installation terminal block, gray		
◯ N/L/PE	**2005-7646**	50
Multilevel installation terminal block, gray		
◯ L/L/PE	**2005-7645**	50

2005 Series Accessories
Appropriate marking systems: WMB/Marking strips (see Section 13)

End and intermediate plate, 1 mm thick

orange **2005-7692** 100 (4x25)

Straight busbar, tin-plated, 1000 mm long, copper (10 x 3) mm

I_N 140 A **210-133** 1

Busbar cover, 1000 mm long

transparent **777-303** 1

Busbar carrier, not suitable as end stop, snaps onto DIN-35 rail, 1.5 mm thick

blue **2009-304** 100 (4x25)

Busbar carrier, can replace end bracket, with detachable separator plate, snaps onto DIN-35 rail, 7.5 mm thick

blue **2009-305** 25

Accessories

N-supply terminal block, I_N 76 A, 16 mm², 12 mm wide

blue **2016-7714** 20

Ground supply terminal block, 16 mm², 12 mm wide

green-yellow **2016-7607** 20

Connector, for N-busbar, with blue cover, 2.5 ... 16 mm²

blue **210-281** 100 (2x50)

Connector, for N-busbar, 2.5 ... 35 mm²

unplated **209-105** 50

Lock-out, prevents reclosing of slide link, snap-on type

orange **2005-7300** 100 (4x25)

Insulation stop, 5 pcs/strip, 0.25 ... 0.5 mm²

light gray **2004-171** 200 (8x25)

Insulation stop, 5 pcs/strip, 0.75 ... 1 mm²

dark gray **2004-172** 200 (8x25)

Push-in type jumper bar, insulated, I_N 32 A, light gray


2-way	**2004-402**	200 (8x25)
3-way	**2004-403**	200 (8x25)
4-way	**2004-404**	100 (4x25)
5-way	**2004-405**	100 (4x25)
6-way	**2004-406**	100 (4x25)
7-way	**2004-407**	100 (4x25)
8-way	**2004-408**	100 (4x25)
9-way	**2004-409**	100 (4x25)
10-way	**2004-410**	100 (4x25)

PUSH-IN CAGE CLAMP®

TOPJOB® S
Multilevel Installation Terminal Block Accessories

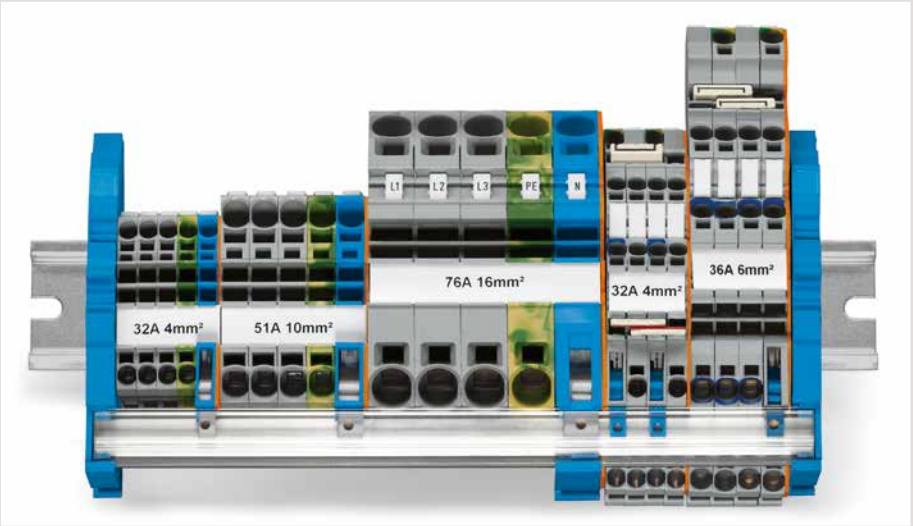

❶ Conductor range: 0.5 ... 6 mm² "s + f-st"; Push-in termination: 1 ... 6 mm² "s" and 0.75 ... 4 mm² "insulated ferrules, 12 mm"

❷ 250 V/ 400 V = rated voltage 4 kV/ 6 kV = rated surge voltage 3 = pollution degree (see Section 14)

❸ 250 V/4 kV potential – ground

❹ 400 V/6 kV potential – potential

Accessories

Appropriate marking systems: WMB/Marking strips (see Section 13)

Push-in type jumper bar, insulated, I_N 32 A, light gray



from 1 to 3	**2004-433**	200 (8x25)	
from 1 to 4	**2004-434**	200 (8x25)	
from 1 to 5	**2004-435**	100 (4x25)	
from 1 to 6	**2004-436**	100 (4x25)	
from 1 to 7	**2004-437**	100 (4x25)	
from 1 to 8	**2004-438**	100 (4x25)	
from 1 to 9	**2004-439**	100 (4x25)	
from 1 to 10	**2004-440**	100 (4x25)	

Test plug adapter, for 4 mm Ø test plug



gray	**2009-174**	100 (4x25)	

Banana plug, for 4 mm socket diameter, color mixed, 10 x



orange, white, black, blue, yellow	**215-111**	50	

Testing tap, for max. 2.5 mm²



gray	**2009-182**	100 (4x25)	

Test plug, with 500 mm cable, 2 mm Ø, max. 42 V



red	**210-136**	50	

Test plug, with 500 mm cable, 2.3 mm Ø, max. 42 V



yellow	**210-137**	50	

WMB Multi marking system, white, 10 strips with 10 markers per card, 5 ... 5.2 mm stretchable

plain	**793-5501**	5	

Marking strip, plain, 11 mm wide, 50 m reel



white	**2009-110**	1	

TOPJOB® S group marker carrier, snap-on type for jumper slot, 5 mm wide



gray	**2009-191**	50 (2x25)	

Screwless end stop, for DIN-35 rail, 6 mm wide



gray	**249-116**	100 (4x25)	

Screwless end stop, for DIN-35 rail, 10 mm wide



gray	**249-117**	50 (2x25)	

Operating tool, 3.5 mm and 5.5 mm blade width, for TOPJOB® S installation terminal blocks



2009-310		1

Operating tool, 3.5 mm and 2.5 mm blade width, for TOPJOB® S installation terminal blocks



2009-309		1

Application note:
N-disconnect slide links, used in installation terminal blocks, consist of switch contacts that are opened and then closed as part of the regular circuit testing. To guarantee a reliable connection, a corrosion-resistant contact area is required on the N-busbar.

Historically, uninsulated copper busbars, that have been cleaned/stripped of any possible corrosion prior to install, can be used in dry, pollution-free locations.

According to DIN VDE 0100-520 (VDE 0100, Part 520), installation equipment exposed to contamination or corrosive substances (e.g., water) that promote corrosion or deterioration, must be protected or made of a corrosion- or wear-resistant material. In these cases, tinned copper busbars guarantee a reliable connection.

WAGO only offers tinned copper busbars.

TOPJOB® S
N-Conductor and Power Distribution Disconnect Terminal Blocks
2.5 (4) mm², 2002 Series and 4 (6) mm², 2006 Series and 16 (25 "f-st") mm², 2016 Series

0.25 … 2.5 (4) mm² ❶ | 22 … 12 AWG **250 V/4 kV/3 ❹** **I_N 32 A** **Terminal block width 5.2 mm / 0.205 inch** **10 … 12 mm / 0.39 … 0.47 inch**	**0.5 … 6 (10) mm² ❷ | 20 … 8 AWG** **250 V/4 kV/3 ❹** **I_N 51 A** **Terminal block width 7.5 mm / 0.295 inch** **13 … 15 mm / 0.51 … 0.59 inch**	**0.5 … 16 (25"f-st") mm² ❸ | 20 … 4 AWG** **250 V/4 kV/3 ❹** **I_N 76 A** **Terminal block width 12 mm / 0.472 inch** **18 … 20 mm / 0.71 … 0.79 inch**

3

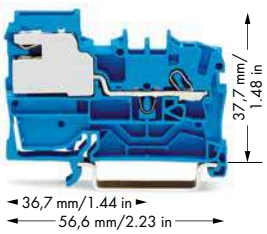

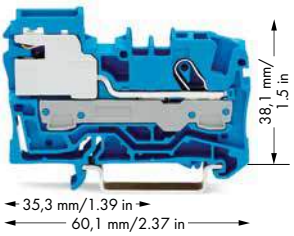

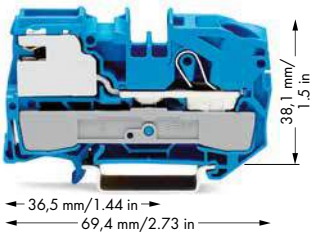

	Item No.	Pack. Unit
1-conductor N-disconnect terminal block		
blue	**2002-7114 ❺**	50
1-conductor power distribution disconnect terminal block		
gray	**2002-7111 ❻**	50
Appropriate through and ground conductor terminal blocks, see page 32		

Item-Specific Accessories

End and intermediate plate, 0.8 mm thick			
	orange	**2002-7192**	100 (4x25)
Lock-out, prevents reclosing of slide link, snap-on type			
	orange	**2005-7300**	100 (4x25)

	Item No.	Pack. Unit
1-conductor N-disconnect terminal block		
blue	**2006-7114 ❺**	50
1-conductor power distribution disconnect terminal block		
gray	**2006-7111 ❻**	50
Appropriate through and ground conductor terminal blocks, see page 38		

Item-Specific Accessories

End and intermediate plate, 1 mm thick			
	orange	**2006-7192**	100 (4x25)
Lock-out, prevents reclosing of slide link, snap-on type			
	orange	**2006-7300**	100 (4x25)

	Item No.	Pack. Unit
1-conductor N-disconnect terminal block		
blue	**2016-7114 ❺**	25
1-conductor power distribution disconnect terminal block		
gray	**2016-7111 ❻**	25
Appropriate through and ground conductor terminal blocks, see page 40		

Item-Specific Accessories

End and intermediate plate, 1 mm thick			
	orange	**2016-7192**	100 (4x25)
Lock-out, prevents reclosing of slide link, snap-on type			
	orange	**2006-7300**	100 (4x25)

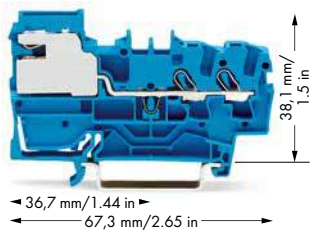

	Item No.	Pack. Unit
2-conductor N-disconnect terminal block		
blue	**2002-7214 ❺**	50
2-conductor power distribution disconnect terminal block		
gray	**2002-7211 ❻**	50

Item-Specific Accessories

End and intermediate plate, 0.8 mm thick			
	orange	**2002-7292**	100 (4x25)

Accessories for N-Conductor and Power Distribution Disconnect Terminal Blocks
Appropriate marking systems: WMB/Marking strips (see Section 13)

Busbar carrier, not suitable as end stop, snaps onto DIN-35 rail, 1.5 mm thick			
	blue	**2009-304**	100 (4x25)
Busbar carrier, can replace end bracket, with detachable separator plate, snaps onto DIN-35 rail, 7.5 mm thick			
	blue	**2009-305**	25
Straight busbar, tin-plated, 1000 mm long, copper (10 x 3) mm			
	I_N 140 A	**210-133**	1
Busbar cover, 1000 mm long			
	transparent	**777-303**	1

Connector, for N-busbar, 2.5 … 35 mm²			
	unplated	**209-105**	50
Connector, for N-busbar, with blue cover, 2.5 … 16 mm²			
	blue	**210-281**	100 (2x50)
Test plug, with 500 mm cable, 2 mm Ø, max. 42 V			
	red	**210-136**	50
Test plug, with 500 mm cable, 2.3 mm Ø, max. 42 V			
	yellow	**210-137**	50
WMB Multi marking system, white, 10 strips with 10 markers per card, 5 … 5.2 mm stretchable			
	plain	**793-5501**	5

Overview of certification organizations, see page 654

PUSH-IN CAGE CLAMP®

TOPJOB® S
Busbar Carrier
Installation

❶ Conductor range: 0.25 … 4 mm² “s + f-st”;
Push-in termination: 0.75 … 4 mm² “s”
and 0.75 … 2.5 mm²
“insulated ferrule, 12 mm”

❷ Conductor range: 0.5 … 10 mm² “s + f-st”;
Push-in termination: 1.5 … 10 mm² “s”
and 1.5 … 6 mm²
“insulated ferrule, 12 mm”

❸ Conductor range: 0.5 … 16 mm² “s + f-st”,
25 mm² “f-st”;
Push-in termination: 2.5 … 16 mm² “s”
and 2.5 … 16 mm²
“insulated ferrule, 18 mm”

❹ 250 V = rated voltage
4 kV = rated surge voltage
3 = pollution degree
(see Section 14)

❺ See column 4

❻ See column 5

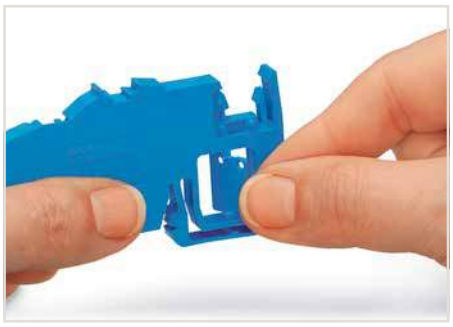

Removing the separator plate from the busbar carrier or from the N-disconnect terminal block.

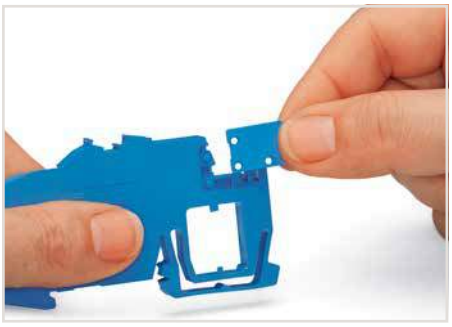

Inserting the separator plate into the busbar carrier to protect the N-busbar against accidental contact.

❺ For the construction and operation of power installations in fire-prone, hazardous locations or public buildings – such as conference centers, stores, hospitals, schools, theaters or hotels – the DIN VDE 0100-710 or DIN VDE 0100-718 standards shall be observed. DIN VDE 0100-482 shall also be observed for fire-prone, hazardous locations. These VDE regulations mandate that every neutral conductor must be provided with a disconnection device so, e.g., insulation testing is possible for every circuit without disconnecting the N-conductor.
WAGO N-disconnect terminal blocks meet this requirement.

❻ According to DIN VDE 0100-710 “Requirements for operating facilities, rooms and special installations – medical facilities,” equipotential bonding conductors shall be run on a potential equalization busbar. The potential equalization busbar and the protective ground conductor busbar must be mounted in a common housing and be connected to each other using a disconnectable copper conductor of minimum 16 mm² (6 AWG). Furthermore, all equipotential bonding conductors must be connected to the potential equalization busbar and clearly arranged so they can be disconnected individually and accessed at any time. Depending on their function, they must also be provided with captive marking.
WAGO power distribution disconnect terminal blocks meet these requirements.

TOPJOB® S – Supply Terminal Blocks for Distribution Boxes/ Ground/N-Conductor and Power Distribution Disconnect Terminal Blocks

16 (25 "f") mm², 2016 Series

0.5 … 16 (25"f-st")mm² ❶ | 20 … 4 AWG
800 V/8 kV/3 ❷
I_N 76 A

Terminal block width 12 mm / 0.472 inch
18 … 20 mm / 0.71 … 0.79 inch

0.5 … 16 (25"f-st")mm² ❶ | 20 … 4 AWG
250 V/4 kV/3 ❸
I_N 76 A

Terminal block width 12 mm / 0.472 inch
18 … 20 mm / 0.71 … 0.79 inch

❶ Conductor range: 0.5 … 16 mm² "s + f-st", 25 mm² "f-st"; Push-in termination: 2.5 … 16 mm² "s" and 0.25 … 16 mm² "insulated ferrule, 18 mm"

❷ 800 V = rated voltage
8 kV = rated surge voltage
3 = pollution degree
(see Section 14)

❸ 250 V = rated voltage
4 kV = rated surge voltage
3 = pollution degree
(see Section 14)

❹ See column 4

❺ See column 5

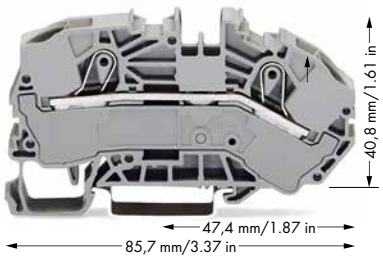

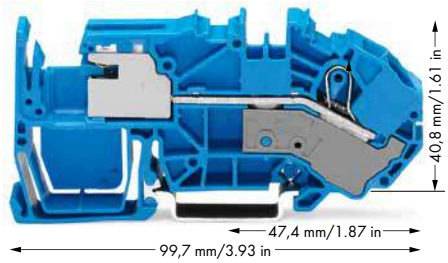

	Item No.	Pack. Unit
2-conductor supply terminal blocks for distribution boxes		
gray	**2016-7601**	20
blue	**2016-7604**	20
2-conductor ground conductor terminal block		
15 mm high DIN-35 rails shall be used for a current load higher than 76 A!		
green-yellow	**2016-7607**	20

	Item No.	Pack. Unit
1-conductor N-disconnect terminal block		
blue	**2016-7714** ❹	20
1-conductor power distribution disconnect terminal block		
gray	**2016-7711** ❺	20

Item-Specific Accessories

End and intermediate plate, 1 mm thick



orange	**2016-7692**	100 (4x25)
gray	**2016-7691**	100 (4x25)

Item-Specific Accessories

End and intermediate plate, 1 mm thick



orange	**2016-7792**	100 (4x25)

Lock-out, prevents reclosing of slide link, snap-on type



orange	**2006-7300**	100 (4x25)

2016 Series Accessories

Appropriate marking systems: WMB/Marking strips (see Section 13)

Push-in type jumper bar, insulated, I_N 76 A, light gray



2-way	**2016-402**	50 (2x25)
3-way	**2016-403**	50 (2x25)
4-way	**2016-404**	50 (2x25)
5-way	**2016-405**	50 (2x25)

Push-in type jumper bar, insulated, I_N 76 A, light gray



from 1 to 3	**2016-433**	50 (2x25)
from 1 to 4	**2016-434**	50 (2x25)
from 1 to 5	**2016-435**	50 (2x25)

Protective warning marker, with high-voltage symbol, black, for 5 terminal blocks



yellow	**2016-115**	50 (2x25)

Finger guard, touch-proof cover protects unused conductor entries



yellow	**2016-100**	100 (4x25)

Straight busbar, tin-plated, 1000 mm long, copper (10 x 3) mm



I_N 140 A	**210-133**	1

Busbar cover, 1000 mm long



transparent	**777-303**	1

Testing tap, for max. 2.5 mm²



gray	**2009-182**	100 (4x25)

Test plug, with 500 mm cable, 2 mm Ø, max. 42 V



red	**210-136**	50

Test plug, with 500 mm cable, 2.3 mm Ø, max. 42 V



yellow	**210-137**	50

Test plug adapter, for 4 mm Ø test plug



gray	**2009-174**	100 (4x25)

Accessories

Banana plug, for 4 mm socket diameter, color mixed, 10 x orange, white, black, blue, yellow



215-111 50

WMB Multi marking system, white, 10 strips with 10 markers per card, 5 … 5.2 mm stretchable

plain **793-5501** 5

Marking strip, plain, 11 mm wide, 50 m reel



white **2009-110** 1

TOPJOB® S
Supply Terminal Block Assembly

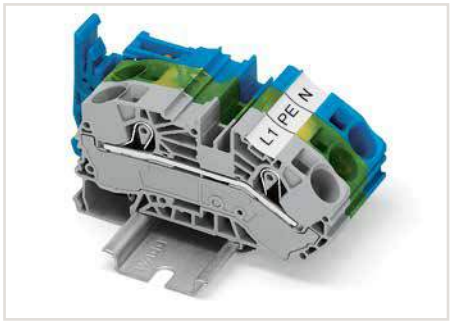

With an angled conductor entry, the 2016 Series Supply Terminal Blocks simplify the wiring of solid conductors in distribution boxes. Solid conductors of the largest cross section can be connected easily, enabling the distribution box cover to fit without interfering with the conductors.

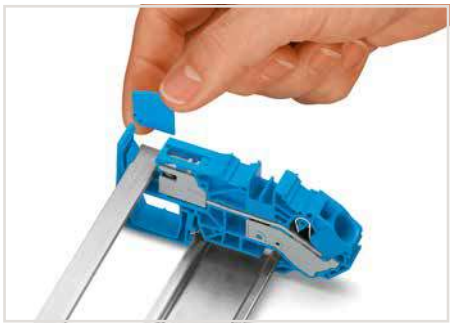

Inserting separator plate removed from N-disconnect terminal block.

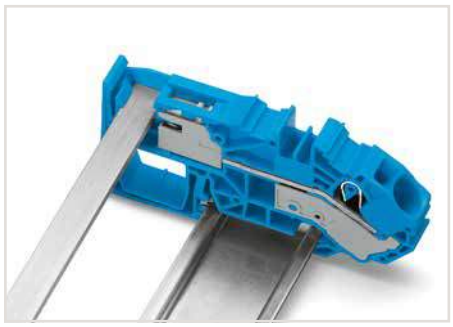

Touch-proof N-busbar via inserted separator plate

❹ For the construction and operation of power installations in fire-prone, hazardous locations or public buildings – such as conference centers, stores, hospitals, schools, theaters or hotels – the DIN VDE 0100-710 or DIN VDE 0100-718 standards shall be observed. DIN VDE 0100-482 shall also be observed for fire-prone, hazardous locations. These VDE regulations mandate that every neutral conductor must be provided with a disconnection device so, e.g., insulation testing is possible for every circuit without disconnecting the N-conductor.
WAGO N-disconnect terminal blocks meet this requirement.

❺ According to DIN VDE 0100-710 "Requirements for operating facilities, rooms and special installations – medical facilities," equipotential bonding conductors shall be run on a potential equalization busbar. The potential equalization busbar and the protective ground conductor busbar must be mounted in a common housing and be connected to each other using a disconnectable copper conductor of minimum 16 mm² (6 AWG). Furthermore, all equipotential bonding conductors must be connected to the potential equalization busbar and clearly arranged so they can be disconnected individually and accessed at any time. Depending on their function, they must also be provided with captive marking.
WAGO power distribution disconnect terminal blocks meet these requirements.

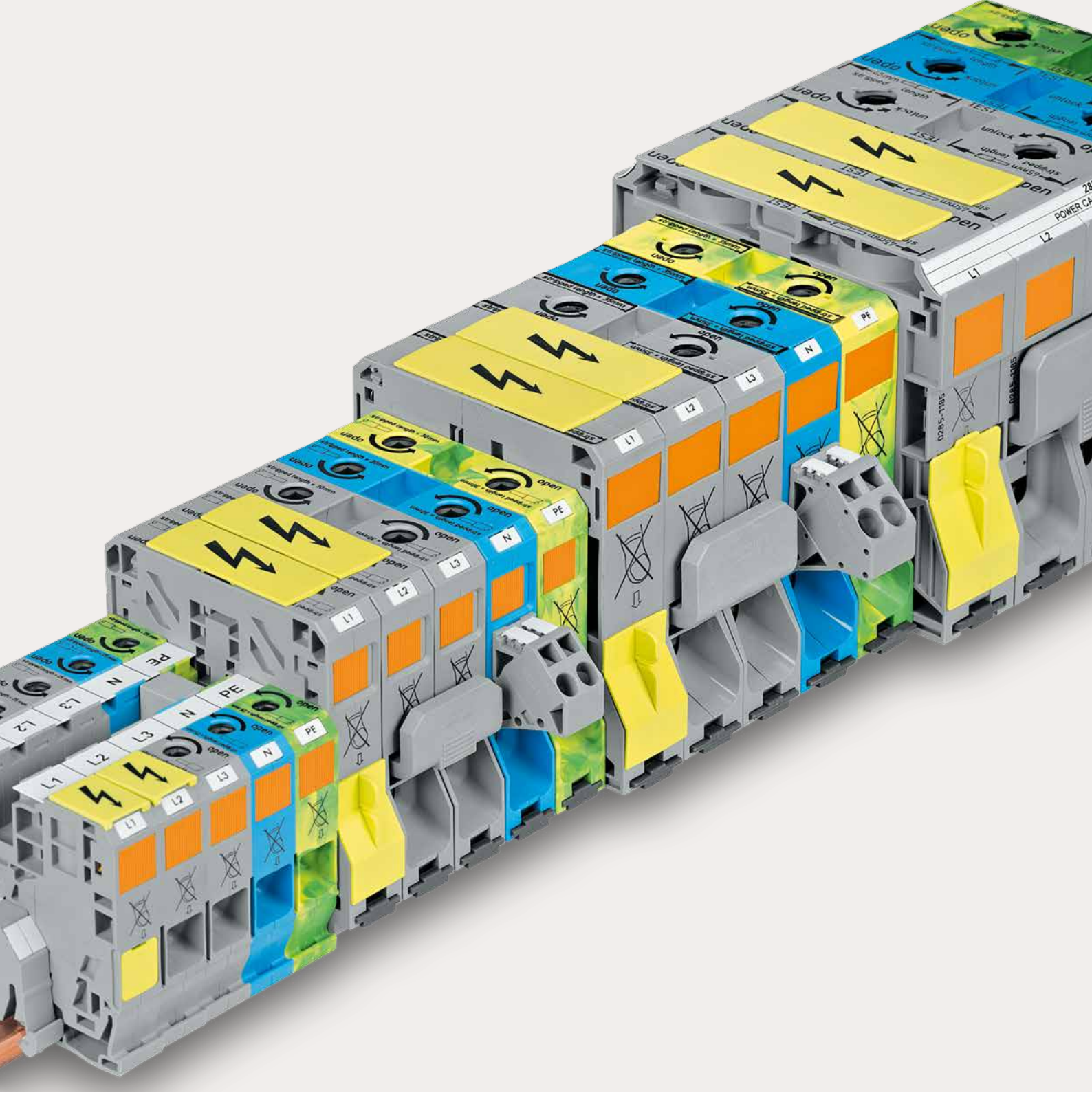

High-Current, Rail-Mount Terminal Blocks

POWER CAGE CLAMP®

High-Current, Rail-Mount Terminal Blocks

Side-Entry Wiring

			Page
	**Through and Ground Conductor Terminal Blocks** 6 … 35 mm² (10 … 2 AWG)	285 Series	204
	**Power Tap for 35 mm² (2 AWG) Terminal Blocks** 0.2 … 6 mm² (24 … 10 AWG)	285 Series	204
	**Through and Ground Conductor Terminal Blocks** 10 … 50 (70) mm² (8 … 1/0 AWG)	285 Series	208
	**Power Tap for 50 mm² (1/0 AWG) Terminal Blocks** 0.2 … 6 mm² (24 … 10 AWG)	285 Series	208
	**Through Terminal Blocks with Mounting Flanges** 10 … 50 (70) mm² (8 … 2/0 AWG)	285 Series	209
	**Through and Ground Conductor Terminal Blocks** 25 … 95 mm² (4 … 4/0 AWG)	285 Series	210
	**Power Tap for 95 mm² (4/0 AWG) Terminal Blocks** 0.2 … 10 mm² (24 … 8 AWG)	285 Series	210
	**Through Terminal Blocks with Mounting Flanges** 25 … 95 mm² (4 … 4/0 AWG)	285 Series	211
	**Through and Ground Conductor Terminal Blocks** 50 … 185 mm² (1/0 AWG … 350 kcmil)	285 Series	212
	**Power Tap for 185 mm² (350 kcmil) Terminal Blocks** 0.2 … 10 (16) mm² (24 … 8 AWG)	285 Series	212
	**Through Terminal Blocks with Mounting Flanges** 50 … 185 mm² (1/0 AWG … 350 kcmil)	285 Series	213

High-Current, Rail-Mount Terminal Blocks, 35 mm², 285 Series

Description and Installation

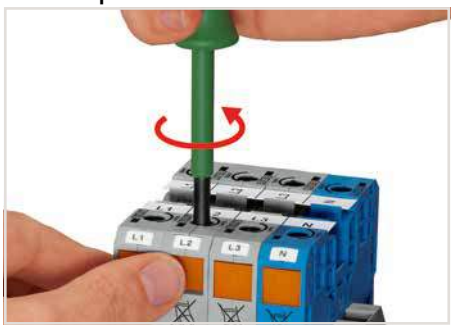

Conductor termination – step 1
Rotate the operating tool (5.5 mm blade width) counter-clockwise. Next, push in the orange locking tab. The clamp is locked open for hands-free wiring.

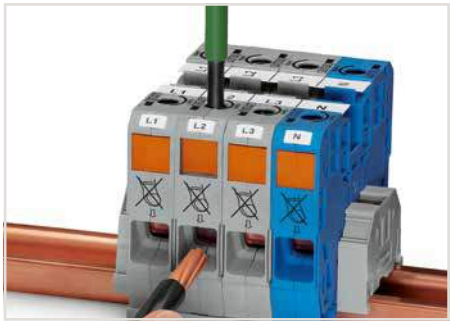

Conductor termination – step 2
Insert a stripped conductor into the clamping unit until it hits backstop. Hold in this position.

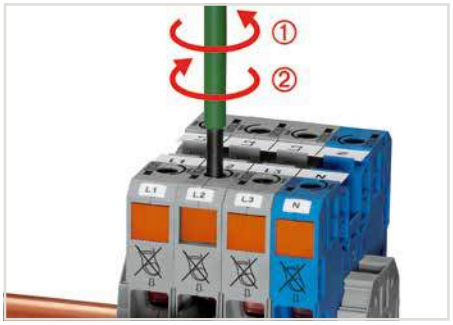

Conductor termination – step 3
A small counter-clockwise rotation closes the clamp, securing conductor ①.
When unlocked, allow operating tool to rotate clockwise ② to securely terminate the conductor.

4



The power tap is inserted into the jumper contact slot. It can be fitted with a strain relief plate.



Testing

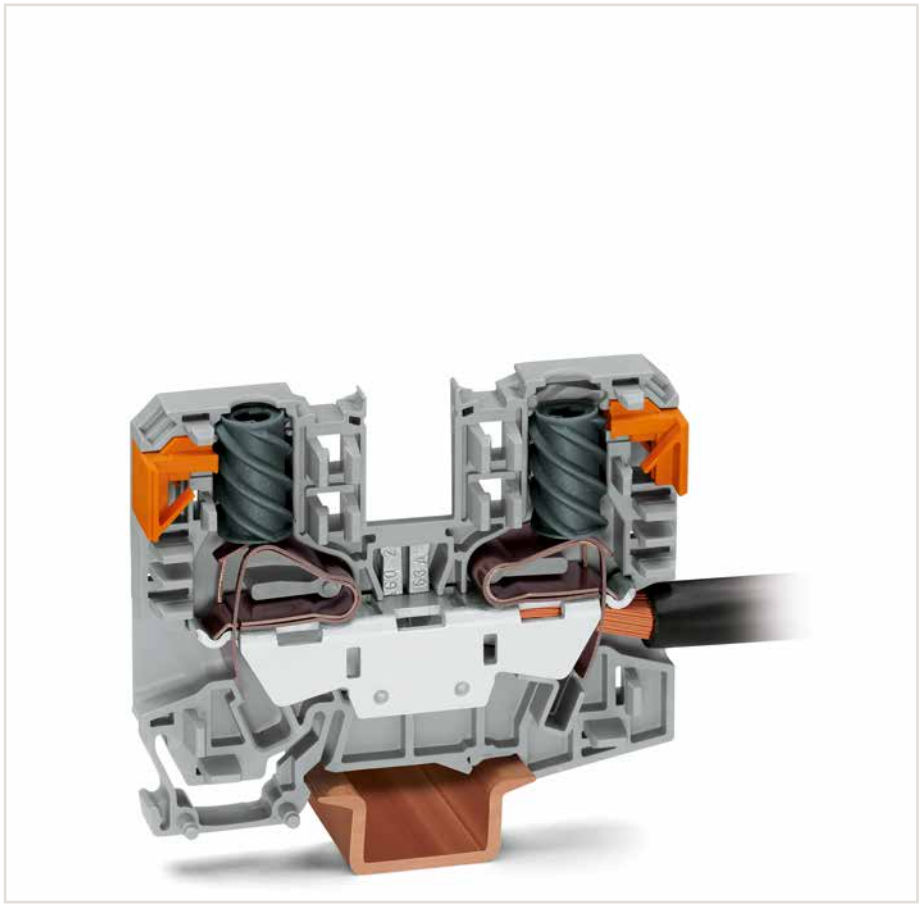



Testing with test plug adapter (283-404)



High-Current, Rail-Mount Terminal Blocks, 35 mm² (2 AWG) and 50 mm² (2/0 AWG)



POWER CAGE CLAMP terminates the following copper conductors:
solid



stranded



fine-stranded, also with tinned single strands

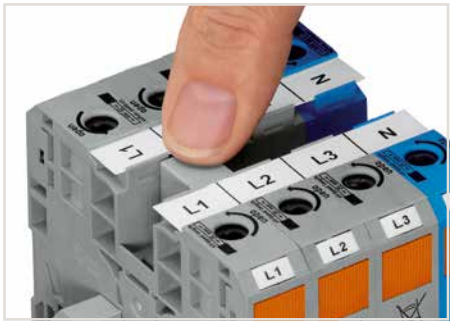

Commoning adjacent terminal blocks using a centrally positioned push-in jumper.



Slide the marking strip laterally to remove the jumper.


Commoning 35 mm² (2 AWG) POWER CAGE CLAMP Terminal Blocks with 10/16 mm² (8/6 AWG) 2010 and 2016 Series TOPJOP® S Terminal Blocks using step-down jumpers (not valid for 2016-76xx and 2016-77xx).

4



Step-down jumpers may common terminal blocks of different sizes, without losing a conductor clamping point. This can be beneficial on long conductor runs where voltage drops may be problematic. A large conductor can be easily connected to smaller conductors at the distribution point.

Step-down jumpers are simply pushed down for full insertion, similar to adjacent jumpers. Commoning may be made in either direction using the special thin end plate to cover the open side. Additional through terminal blocks having a smaller cross-section may be commoned using adjacent jumpers.

In this case, pay attention that:
The total current of the outgoing circuits does not exceed the nominal current of the step-down jumper.


Side-entry wiring means that even larger conductors, which have limited flexibility, can be easily connected.

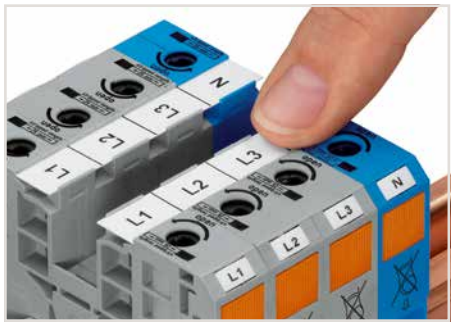

WMB markers or self-adhesive, printable marking strips can be accommodated on 35, 50 and 95 mm² high-current terminal blocks.



Marker carrier for marking strip or 2 x WMB markers for 285-13x, 285-15x and 285-19x terminal blocks


fine-stranded, with ferrule (gastight crimped)

POWER CAGE CLAMP®

High-Current, Through/Ground Conductor and Ex Terminal Blocks

35 mm², 285 Series

6 ... 35 mm²	10 ... 2 AWG
1000 V/8 kV/3 ❶	600 V, 115 A
I_N 125 A	600 V, 115 A
Terminal block width 16 mm / 0.63 inch	
25 mm / 0.98 inch	

0.2 ... 6 mm²	24 ... 10 AWG
800 V/8 kV/3 ❷	600 V, 30 A
I_N 32 A	600 V, 32 A
Module width 8 mm / 0.315 inch	
12 ... 13 mm / 0.47 ... 0.51 inch	

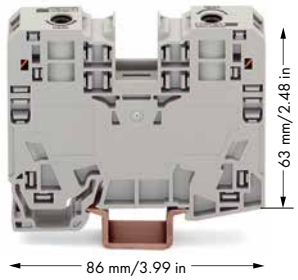



❶ 1000 V = rated voltage
8 kV = rated surge voltage
3 = pollution degree
(see Section 14)

❷ 800 V = rated voltage
8 kV = rated surge voltage
3 = pollution degree
(see Section 14)

❹ Suitable for Ex e II applications
800 V, 101 A
(see Section 14)

❺ See application notes for:
Step-down jumper, page 203

4

	Item No.	Pack. Unit
2-conductor through terminal block, only on DIN-35 x 15 rail		
gray	285-135	15
blue	285-134	15
light gray Ex	285-935 ❸	15
dark gray/yellow	285-131	15
2-conductor ground terminal block, only on DIN-35 x 15 rail; 2.3 mm thick		
green-yellow	285-137	15
green-yellow Ex	285-137/999-950 ❸	15

	Item No.	Pack. Unit
Power tap, for 35 mm² high-current terminal blocks		
gray	285-427	5

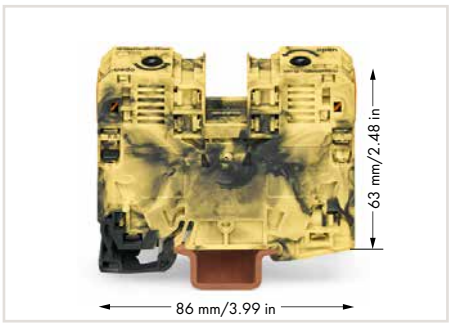

2-conductor through terminal block, dark gray/yellow (285-131)

Item-Specific Accessories

Adjacent jumper, insulated, I_N 85 A



gray 285-435 50 (2x25)

Step-down jumper, insulated, I_N 90 A ❹



gray 285-430 50 (2x25)

Protective warning marker, with black high-voltage symbol



yellow 285-420 100 (4x25)

Finger guard, touch-proof cover protects unused conductor entries



yellow 285-421 100 (4x25)

Test plug adapter, 11.6 mm wide, for 4 mm Ø test plug, for 1.5 ... 16 mm² terminal blocks



gray 283-404 25

Operating tool with a partially insulated shaft, type 3, (5.5 x 0.8) mm blade



210-721 1

Three-phase set, with 35mm² high-current terminal blocks



285-139 1

Power tap, I_N 24 A, with 500 mm cable, for terminal blocks 16 mm² (283/783 Series) and 35 mm² (285/785 Series)



gray 283-407 25

Copper carrier rail, per EN 60715, 35 x 15 mm, 2.3 mm, 2 m long



unslotted 210-198 10

Item-Specific Accessories

Strain relief plate, gray



1-pole 769-410 100 (4x25)

Test plug, with 500 mm cable, 2 mm Ø, max. 42 V



red 210-136 50

WMB Multi marking system, white, 10 strips with 10 markers per card, for 5 ... 17.5 mm terminal width

plain 793-501 5

WMB Multi marking system, white, 10 strips with 10 markers per card, 5 ... 5.2 mm stretchable

plain 793-5501 5



Always push power tap (283-407) down into the terminal block until fully inserted!

Overview of certification organizations, see page 654

WAGO

High-Current, Rail-Mount Terminal Blocks, 50 … 185 mm², 285 Series

Description and Installation



Conductor termination – step 1
Rotate the T-wrench counter-clockwise to the stop ①. Next, push in the orange locking tab. The clamp is locked open for hands-free wiring.

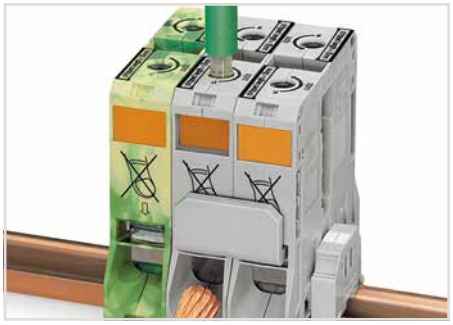

Conductor termination – step 2
Insert a stripped conductor into the clamping unit until it hits backstop. Hold in this position.



Conductor termination – step 3
A short counter-clockwise rotation ② releases the locking tab. When unlocked, the T-wrench rotates clockwise, securely clamping the conductor.



For the optimal clamping force:
- Bend conductor.
- Cut conductor to length (conductor end must be straight).
- Strip conductor.



Always observe the printed strip length!



Grounding foot
Ground conductor terminal blocks (limited to max. 120 mm²/250 kcmil per EN 60947-7-2) must be snapped onto a 2.3 mm thick copper carrier rail.



Protective warning marker may indicate:
Notice: Power is still on even after switching off the main switch!



Risk of Injury!
Do not insert fingers in the conductor entry!



Yellow, detachable finger guards provide touch-proof safety by shielding jumper contact slots and/or unused conductor entries.



POWER CAGE CLAMP terminates the following copper conductors:
solid



stranded



fine-stranded, also with tinned single strands

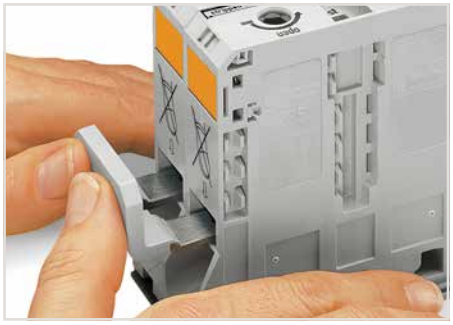

Commoning with an adjacent jumper: Insert the jumper above the conductor entry hole – prior to conductor termination. The nominal cross-section remains unchanged.

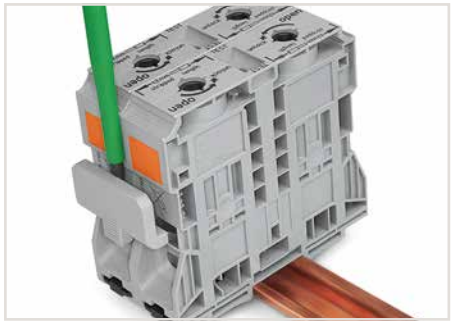

Removing jumper via operating tool.



Reliably and easily tap directly into the power supply. Insert the unwired tap before opening the clamping unit.





Testing via touch-proof 4 mm Ø test plugs (not available from WAGO, but offered by industry suppliers such as, Multi-Contact Deutschland GmbH).



Testing

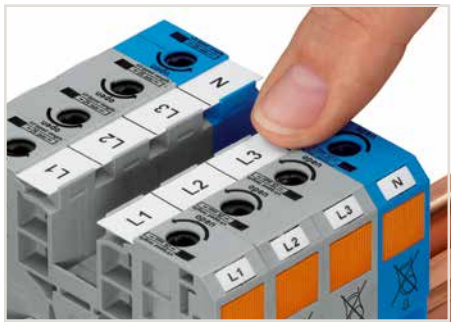

WMB markers or self-adhesive, printable marking strips can be accommodated on 35, 50 and 95 mm² high-current terminal blocks.

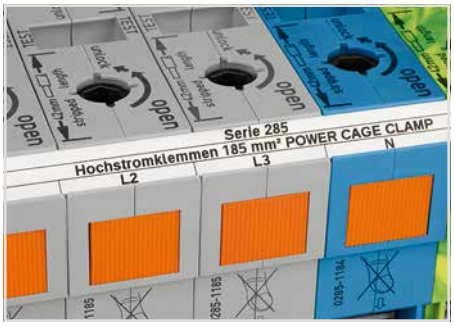

In addition to WMB markers, marking strips can be directly applied to 185 mm² (350 kcmil) high-current terminal blocks.



fine-stranded, with ferrule (gastight crimped)

POWER CAGE CLAMP®

High-Current, Through/Ground Conductor and Ex Terminal Blocks

50 (70 "f-st") mm², 285 Series

10 ... 50 (70 "f-st") mm²	**8 ... 1/0 AWG**	**0.2 ... 6 mm²**	**24 ... 10 AWG**
1000 V/8 kV/3 ❶	**600 V, 150 A**	**1000 V/8 kV/3 ❶**	**600 V, 30 A**
I_N 150 A	**600 V, 150 A**	**I_N 41 A**	**600 V, 41 A**
Terminal block width 20 mm / 0.787 inch		**Module width 16 mm / 0.63 inch**	
30 mm / 1.18 inch		**12 ... 13 mm / 0.47 ... 0.51 inch**	

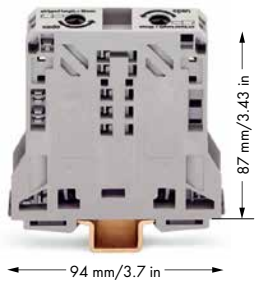



❶ 1000 V = rated voltage
8 kV = rated surge voltage
3 = pollution degree
(see Section 14)

❷ Suitable for Ex e II applications
800 V, 134 A
(see Section 14)

❸ Jumper can only be removed or inserted when the clamp is closed.

	Item No.	Pack. Unit
2-conductor through terminal block, only on DIN-35 x 15 rail		
gray	**285-150**	5
blue	**285-154**	5
light gray Ex	**285-950** ❷	5
dark gray/yellow	**285-151**	5
2-conductor ground terminal block, only on DIN-35 x 15 rail; 2.3 mm thick, copper		
green-yellow	**285-157**	5
green-yellow Ex	**285-157/999-950** ❷	5

	Item No.	Pack. Unit
Power tap, for 50 mm² high-current terminal blocks		
gray	**285-447**	5

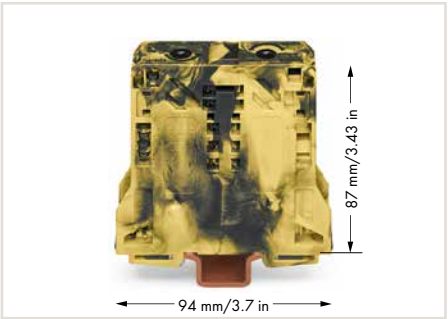

2-conductor through terminal block, dark gray/yellow (285-151)

Item-Specific Accessories

Adjacent jumper, insulated, ❸			
	I_N 150 A for 1 jumper, I_N 130 A for 2 ... 4 jumpers		
	gray	**285-450**	100 (4x25)
Protective warning marker, with black high-voltage symbol			
	yellow	**285-440**	50 (2x25)
Finger guard, touch-proof cover protects unused conductor entries and jumper slots			
	yellow	**285-441**	100 (4x25)
T-wrench with a partially insulated shaft			
		285-172	1
Three-phase set, with 50 mm² high-current terminal blocks			
		285-159	1
WMB Multi marking system, white, 10 strips with 10 markers per card, for 5 ... 17.5 mm terminal width			
	plain	**793-501**	5
WMB Multi marking system, white, 10 strips with 10 markers per card, 5 ... 5.2 mm stretchable			
	plain	**793-5501**	5
Marking strip, plain, 11 mm wide, 50 m reel			
	white	**2009-110**	1
Copper carrier rail, per EN 60715, 35 x 15 mm, 2.3 mm, 2 m long			
	unslotted	**210-198**	10

Item-Specific Accessories

Protective warning marker, with black high-voltage symbol, for 5 terminal blocks			
	yellow	**282-415**	50 (2x25)
WMB Multi marking system, white, 10 strips with 10 markers per card, for 5 ... 17.5 mm terminal width			
	plain	**793-501**	5
WMB Multi marking system, white, 10 strips with 10 markers per card, 5 ... 5.2 mm stretchable			
	plain	**793-5501**	5



Marker carrier for marking strip or 2 x WMB markers for 285-13x, 285-15x and 285-19x terminal blocks

Overview of certification organizations, see page 654

POWER CAGE CLAMP®

High-Current, Through Terminal Blocks with Mounting Flanges

50 (70 “f-st”) mm², 285 Series

10 … 50 (70 “f-st”) mm² | 8 … 1/0 AWG **1000 V/8 kV/3** ❶ **I_N 150 A** **Terminal block width 20 mm / 0.787 inch** **30 mm / 1.18 inch**	**10 … 50 (70 “f-st”) mm² | 8 … 1/0 AWG** **1000 V/8 kV/3** ❶ **I_N 150 A** **Terminal block width 20 mm / 0.787 inch** **30 mm / 1.18 inch**



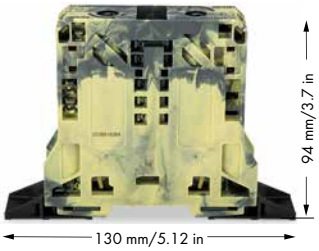

❶ 1000 V = rated voltage
8 kV = rated surge voltage
3 = pollution degree
(see Section 14)

❷ Jumper can only be removed or inserted when the clamp is closed.

4

	Item No.	Pack. Unit		Item No.	Pack. Unit
2-conductor through terminal block, with mounting flanges			2-conductor through terminal block, with mounting flanges		
gray	**285-141**	5	dark gray/yellow	**285-147**	5
blue	**285-144**	5			

285 Series Accessories

Appropriate marking systems: WMB/WMB Inline/Marking strips (see Section 13)

Adjacent jumper, insulated, ❷			WMB Multi marking system, white, 10 strips with 10 markers per card, for 5 … 17.5 mm terminal width		
	I_N 150 A for 1 jumper, I_N 130 A for 2 … 4 jumpers				
gray	**285-450**	100 (4x25)	plain	**793-501**	5
Block-to-block connector, for 50 mm² high-current terminal blocks			WMB Multi marking system, white, 10 strips with 10 markers per card, 5 … 5.2 mm stretchable		
					
yellow	**285-448**	50 (2x25)	plain	**793-5501**	5
Protective warning marker, with black high-voltage symbol			Marking strip, plain, 11 mm wide, 50 m reel		
					
yellow	**285-440**	50 (2x25)	white	**2009-110**	1
Finger guard, touch-proof cover protects unused conductor entries and jumper slots			Marker carrier, for POWER CAGE CLAMP 35/50/95 mm², 10.4 mm wide		
					
yellow	**285-441**	100 (4x25)	gray	**285-442**	25
T-wrench with a partially insulated shaft					
	**285-172**	1			
Three-phase set, with 50 mm² high-current terminal blocks					
	**285-148**	1			



Optionally, insert block-to-block connector (285-448) into housing slot.



Align and snap high-current, through terminal blocks together.

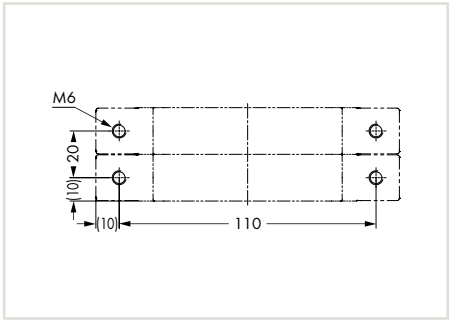

Dimensions (in mm)
Drill hole separation distance

POWER CAGE CLAMP®

High-Current, Through/Ground Conductor and Ex Terminal Blocks

95 mm², 285 Series

25 … 95 mm²	**4 … 4/0 AWG**
1000 V/8 kV/3 ❷	**600 V, 200 A**
I_N 232 A	**600 V, 210 A**
Terminal block width 25 mm / 0.984 inch	
35 mm / 1.38 inch	

0.2 … 10 (16) mm² ❶	**24 … 8 AWG**
1000 V/8 kV/3 ❷	**600 V, 50 A**
I_N 57 A	
Module width 20 mm / 0.787 inch	
12 … 13 mm / 0.47 … 0.51 inch	

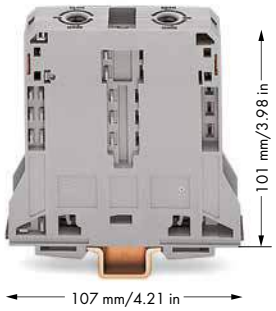



❶ Max. connector size: 16 mm²

❷ 1000 V = rated voltage
8 kV = rated surge voltage
3 = pollution degree
(see Section 14)

❸ Suitable for Ex e II applications
25 … 95 mm² / 4 … 4/0 AWG
880 V, 211 A
1 jumper 211 A
2 … 4 jumpers 175 A
35 … 70 mm² / 2 … 2/0 AWG
for ground conductor terminal blocks
(see Section 14)

	Item No.	Pack. Unit
2-conductor through terminal block, only on DIN-35 x 15 rail		
gray	**285-195**	5
blue	**285-194**	5
light gray Ex	**285-995** ❸	5
dark gray/yellow	**285-191**	5
2-conductor ground terminal block, only on DIN-35 x 15 rail; 2.3 mm thick, copper		
green-yellow	**285-197**	5
green-yellow Ex	**285-197/999-950** ❸	5

	Item No.	Pack. Unit
Power tap, for 95 mm² high-current terminal blocks		
gray	**285-407**	5

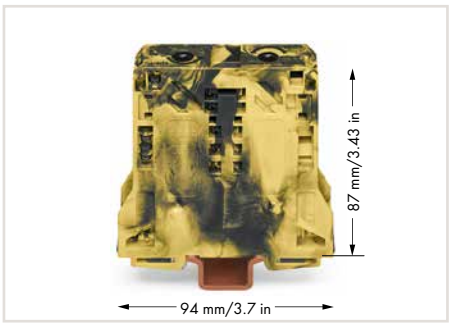

2-conductor through terminal block, dark gray/yellow (285-191)

Item-Specific Accessories

		Item No.	Pack. Unit
Adjacent jumper, insulated,			
	I_N 232 A for 1 jumper, I_N 192 A for 2 … 4 jumpers		
	gray	**285-495**	25
Protective warning marker, with black high-voltage symbol			
	yellow	**285-170**	50 (2x25)
Finger guard, touch-proof cover protects unused conductor entries and jumper slots			
	yellow	**285-169**	25
T-wrench with a partially insulated shaft			
		**285-172**	1
Three-phase set, with 95mm² high-current terminal blocks			
		**285-199**	1
Steel carrier rail, per EN 60715, 35 x 15 mm, 2.3 mm, 2 m long			
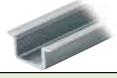	unslotted	**210-118**	10
Copper carrier rail, per EN 60715, 35 x 15 mm, 2.3 mm, 2 m long			
	unslotted	**210-198**	10
WMB Multi marking system, white, 10 strips with 10 markers per card, for 5 … 17.5 mm terminal width			
	plain	**793-501**	5
Marker carrier, for POWER CAGE CLAMP 35/50/95 mm², 10.4 mm wide			
	gray	**285-442**	25

Item-Specific Accessories

		Item No.	Pack. Unit
Protective warning marker, with black high-voltage symbol, for 5 terminal blocks			
	yellow	**284-415**	50 (2x25)
WMB Multi marking system, white, 10 strips with 10 markers per card, for 5 … 17.5 mm terminal width			
	plain	**793-501**	5
WMB Multi marking system, white, 10 strips with 10 markers per card, 5 … 5.2 mm stretchable			
	plain	**793-5501**	5



Marker carrier for marking strip or 2 x WMB markers for 285-13x, 285-15x and 285-19x terminal blocks

Overview of certification organizations, see page 654

POWER CAGE CLAMP®

High-Current, Through Terminal Blocks with Mounting Flanges

95 mm², 285 Series

25 … 95 mm² | 4 … 4/0 AWG **1000 V/8 kV/3 ❶** **I_N 232 A** **Terminal block width 25 mm / 0.984 inch** **35 mm / 1.38 inch**	**25 … 95 mm² | 4 … 4/0 AWG** **1000 V/8 kV/3 ❶** **I_N 232 A** **Terminal block width 25 mm / 0.984 inch** **35 mm / 1.38 inch**



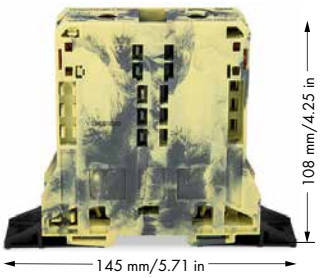

❶ 1000 V = rated voltage
8 kV = rated surge voltage
3 = pollution degree
(see Section 14)

	Item No.	Pack. Unit
2-conductor through terminal block, with mounting flanges		
gray	**285-181**	5
blue	**285-184**	5

	Item No.	Pack. Unit
2-conductor through terminal block, with mounting flanges		
dark gray/yellow	**285-187**	5

Accessories

Appropriate marking systems: WMB/WMB Inline/Marking strips (see Section 13)

Adjacent jumper, insulated, I_N 232 A for 1 jumper, I_N 192 A for 2 … 4 jumpers			
gray	**285-495**	25	
Block-to-block connector, for 95 mm² high-current terminal blocks			
yellow	**285-168**	50 (2x25)	
Protective warning marker, with black high-voltage symbol			
yellow	**285-170**	50 (2x25)	
Finger guard, touch-proof cover protects unused conductor entries and jumper slots			
yellow	**285-169**	25	
T-wrench with a partially insulated shaft			
	285-172	1	
Three-phase set, with 95mm² high-current terminal blocks			
	285-188	1	

WMB Multi marking system, white, 10 strips with 10 markers per card, for 5 … 17.5 mm terminal width			
plain	**793-501**	5	
WMB Multi marking system, white, 10 strips with 10 markers per card, 5 … 5.2 mm stretchable			
plain	**793-5501**	5	
Marking strip, plain, 11 mm wide, 50 m reel			
white	**2009-110**	1	
Marker carrier, for POWER CAGE CLAMP 35/50/95 mm², 10.4 mm wide			
gray	**285-442**	25	



Optionally, insert block-to-block connector (285-168) into housing slot.



Align and snap high-current, through terminal blocks together.

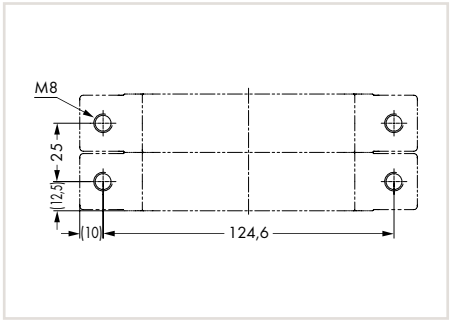

Dimensions (in mm)
Drill hole separation distance

POWER CAGE CLAMP®

High-Current, Through/Ground Conductor and Ex Terminal Blocks

185 mm², 285 Series

50 … 185 mm² | 1/0 AWG … 350 kcmil	**0.2 … 10 (16) mm² | 24 … 8 AWG**
1000 V AC/DC/1500 VDC/12 kV/3 ❶	**1000 V/8 kV/3 ❷**
I_N 353 A	**I_N 57 A**
Terminal block width 32 mm / 1.26 inch	**Module width 20 mm / 0.787 inch**
45 … 47 mm / 1.77 … 1.85 inch	**12 … 13 mm / 0.47 … 0.51 inch**

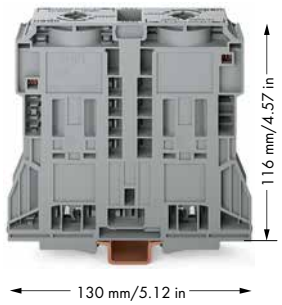



❶ AC/DC up to 1000 V = rated voltage
DC up to 1500 V
12 kV = rated surge voltage
3 = pollution degree
(see Section 14)

❷ 1000 V = rated voltage
8 kV = rated surge voltage
3 = pollution degree
(see Section 14)

❸ 50 … 120 mm² / 1/0 AWG … 250 kcmil for ground conductor terminal blocks

4

	Item No.	Pack. Unit
2-conductor through terminal block, only on DIN-35 x 15 rail		
gray	**285-1185**	5
blue	**285-1184**	5
dark gray/yellow	**285-1181**	5
2-conductor ground terminal block, only on DIN-35 x 15 rail; 2.3 mm thick, copper		
green-yellow	**285-1187** ❸	5

	Item No.	Pack. Unit
Power tap, for 185 mm² high-current terminal blocks		
gray	**285-1175**	5



Tapping directly into the power supply.

Item-Specific Accessories

Adjacent jumper, insulated, I_N 309 A for 1 jumper, I_N 265 A for 3 jumpers, I_N 240 A for 4 jumpers			
gray	**285-1171**	25	
Protective warning marker, with black high-voltage symbol			
yellow	**285-1177**	50 (2x25)	
Finger guard, touch-proof cover protects unused conductor entries and jumper slots			
yellow	**285-1178**	25	
T-wrench with a partially insulated shaft			
	285-172	1	
Three-phase set, with 185mm² high-current terminal blocks			
	285-1169	1	
Copper carrier rail, per EN 60715, 35 x 15 mm, 2.3 mm, 2 m long			
unslotted	**210-198**	10	
WMB Multi marking system, white, 10 strips with 10 markers per card, for 5 … 17.5 mm terminal width			
plain	**793-501**	5	
Marking strip, plain, 11 mm wide, 50 m reel			
white	**2009-110**	1	
Screwless end stop, for DIN-35 rail, 14 mm wide			
gray	**249-197**	10	

Item-Specific Accessories

Protective warning marker, with black high-voltage symbol, for 5 terminal blocks			
yellow	**284-415**	50 (2x25)	
WMB Multi marking system, white, 10 strips with 10 markers per card, for 5 … 17.5 mm terminal width			
plain	**793-501**	5	
WMB Multi marking system, white, 10 strips with 10 markers per card, 5 … 5.2 mm stretchable			
plain	**793-5501**	5	

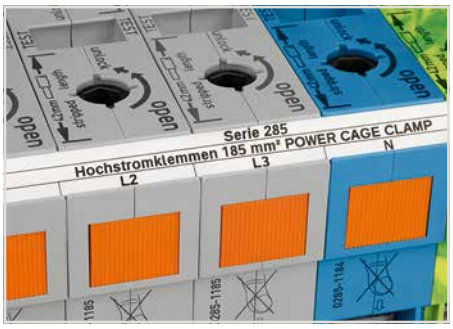

In addition to WMB markers, marking strips can be directly applied to 185 mm² (350 kcmil) high-current terminal blocks.

Overview of certification organizations, see page 654

POWER CAGE CLAMP®

High-Current, Through Terminal Blocks with Mounting Flanges

185 mm², 285 Series

50 ... 185 mm² | 1/0 AWG ... 350 kcmil **1000 V AC/DC/1500 VDC/12 kV/3 ❶** **I_N 353 A** **Terminal block width 32 mm / 1.26 inch** **45 ... 47 mm / 1.77 ... 1.85 inch**	**50 ... 185 mm² | 1/0 AWG ... 350 kcmil** **1000 V AC/DC/1500 VDC/12 kV/3 ❶** **I_N 353 A** **Terminal block width 32 mm / 1.26 inch** **45 ... 47 mm / 1.77 ... 1.85 inch**

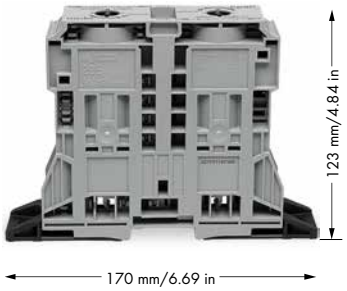

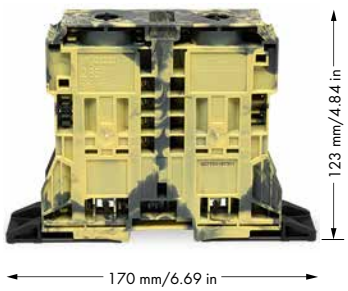

❶ AC/DC up to 1000 V = rated voltage
DC up to 1500 V
12 kV = rated surge voltage
3 = pollution degree
(see Section 14)

4

	Item No.	Pack. Unit		Item No.	Pack. Unit
2-conductor through terminal block, with mounting flanges			2-conductor through terminal block, with mounting flanges		
gray	**285-1161**	4	dark gray/yellow	**285-1167**	4
blue	**285-1164**	4			



Optionally, insert block-to-block connector (285-1179) into housing slot.

Accessories

Appropriate marking systems: WMB/WMB Inline/Marking strips (see Section 13)

Adjacent jumper, insulated, I_N 309 A for 1 jumper, I_N 265 A for 3 jumpers, I_N 240 A for 4 jumpers			WMB Inline, plain, 1,500 WMB markers (5 mm) per reel, 5 ... 5.2 mm stretchable		
gray	**285-1171**	25	white	**2009-115**	1
Block-to-block connector, for 185 mm² high-current terminal blocks			WMB Multi marking system, white, 10 strips with 10 markers per card, for 5 ... 17.5 mm terminal width		
yellow	**285-1179**	50 (2x25)	plain	**793-501**	5
Protective warning marker, with black high-voltage symbol			WMB Multi marking system, white, 10 strips with 10 markers per card, 5 ... 5.2 mm stretchable		
yellow	**285-1177**	50 (2x25)	plain	**793-5501**	5
Finger guard, touch-proof cover protects unused conductor entries and jumper slots			Marking strip, plain, 11 mm wide, 50 m reel		
yellow	**285-1178**	25	white	**2009-110**	1
T-wrench with a partially insulated shaft					
	285-172	1			
Three-phase set, with 185mm² high-current terminal blocks					
	285-1165	1			

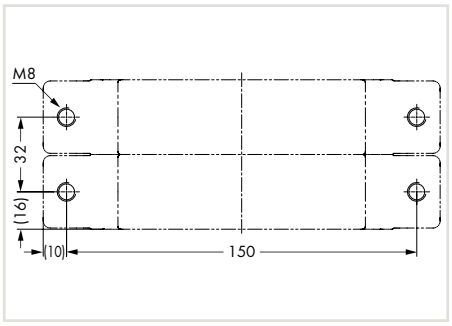

Dimensions (in mm)
Drill hole separation distance



Secure the terminal block to a mounting plate using two M8 cylinder-head screws and appropriate washers.

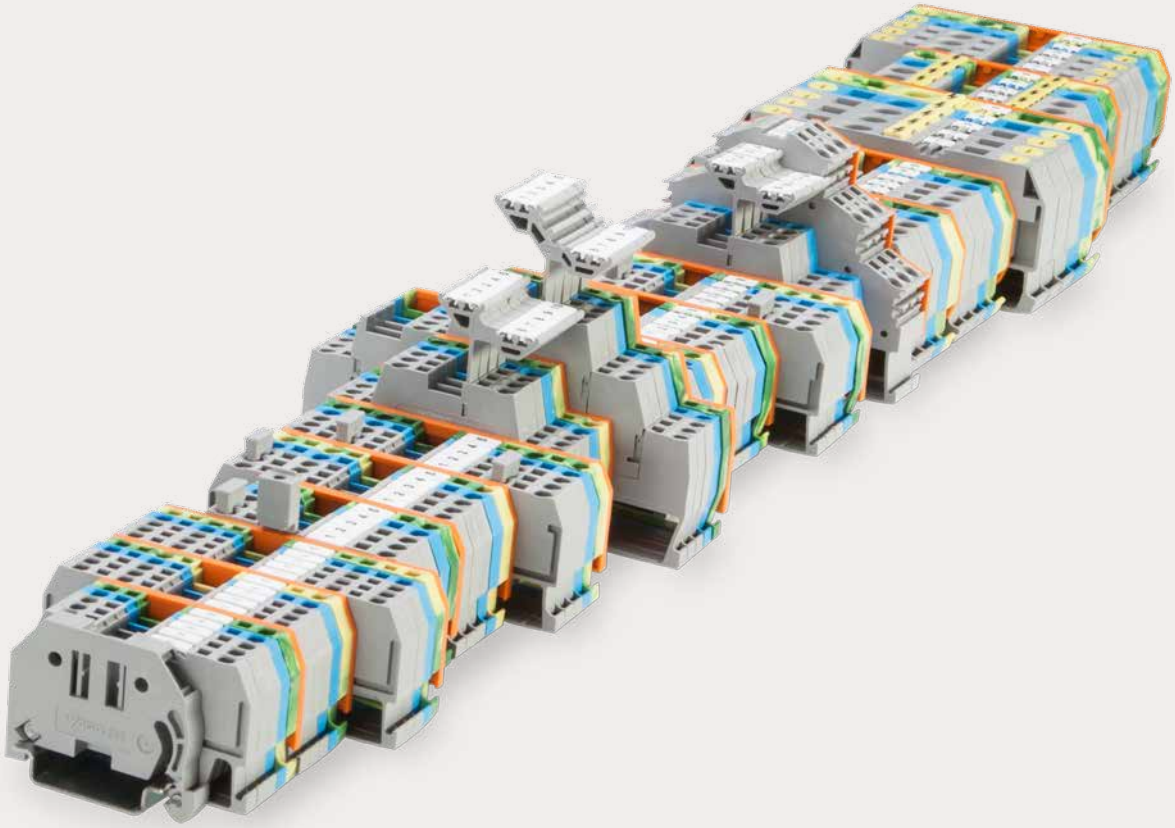

Rail-Mount Terminal Blocks, Classic

CAGE CLAMP®

Rail-Mount Terminal Blocks, Classic
Installation Rail-Mount Terminal Blocks, TOPJOB®, Classic
Front-Entry Wiring

			Page
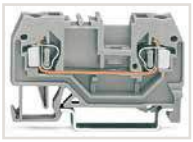	**Through, Ground/Shield Conductor, Ex Terminal Blocks** 0.08 … 35 mm² (28 … 2 AWG)	279 … 285/880 Series	218
	Distribution Terminal Blocks 10 mm²/35 mm² (8/2 AWG)	284 Series	233
	**Multilevel Rail-Mount Terminal Blocks** 1.5/2.5/4 mm² (16/12 AWG)	279/280/281 Series	236
	**TOPJOB®, Classic** **Through, Ground/Shield Conductor and Ex Terminal Blocks** 0.08 … 35 mm² (28 … 2 AWG)	780 … 785 Series	251
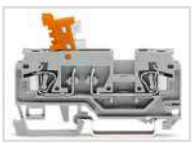	**Disconnect/Test Terminal Blocks** 0.08 … 4 mm² (28 … 12 AWG) and 0.2 … 6 mm² (24 … 10 AWG)	280/281 and 282 Series	260
	**Disconnect, Ground Conductor Disconnect and Fuse Terminal Blocks** 0.2 … 6 mm² (24 … 10 AWG)	282 Series	276
	**Fused Disconnect Terminal Blocks with a Pivoting Fuse Holder** 0.08 … 4 mm² (28 … 12 AWG)	281 Series	282
	**Fuse Plugs on Carrier Terminal Blocks**	281/280 Series	286
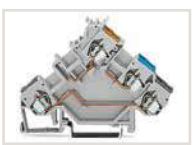	**Sensor and Actuator Terminal Blocks** 0.08 … 2.5 mm² (28 … 12 AWG)	280 Series	296
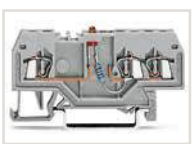	**Diode and LED Terminal Blocks** 0.08 … 4 mm² (28 … 12 AWG)	279 … 281 Series	312
	**Multilevel Diode and LED Terminal Blocks** 0.08 … 4 mm² (28 … 12 AWG)	280/281 Series	318
	**Diode and LED Modules**	280 Series	322
	**Accessories for Rail-Mount Terminal Blocks**		326

5

Rail-Mount Terminal Blocks, 279 ... 285 and 880 Series

Description and Installation



By snapping a ground conductor terminal block onto the carrier rail, a direct electrical connection is automatically made to the rail.



Quick assembly keys prevent reverse mounting.

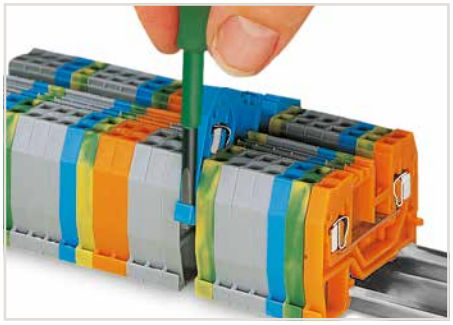

Removing a terminal block from the assembly.

5

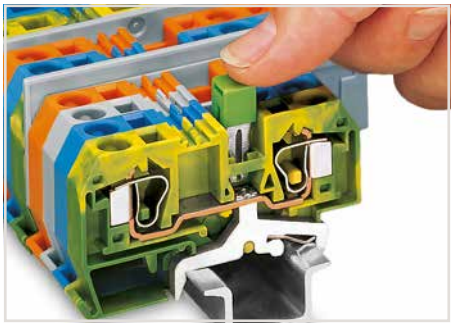

Commoning ground conductor terminal blocks with through terminal blocks is possible in one direction only (via rear side of terminal block) using adjacent jumpers. In addition to the required marking of these blocks, use yellow-green adjacent jumpers.

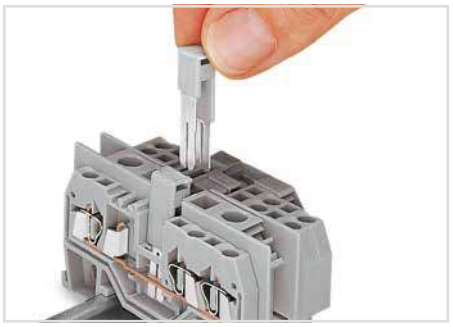

Commoning terminal blocks of different sizes via step-down jumpers.

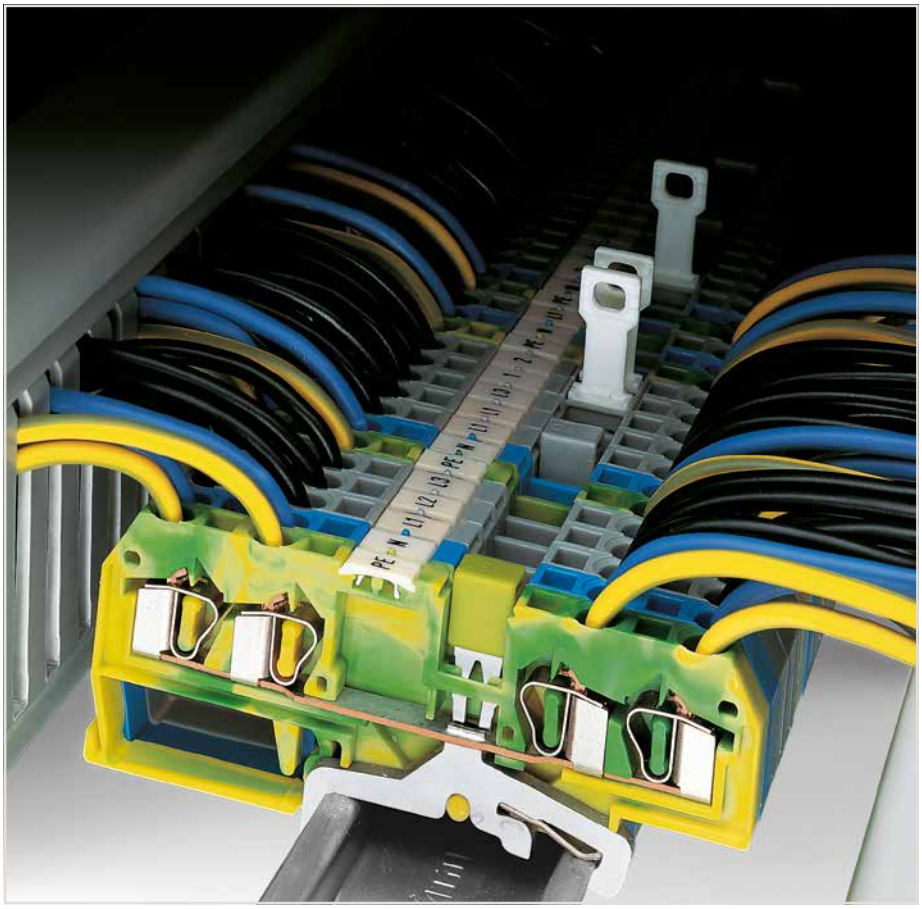

Steel carrier rails are not suited for PEN (ground and N-conductor) applications per EN 60947-7-2 (VDE 0611, Part 3).

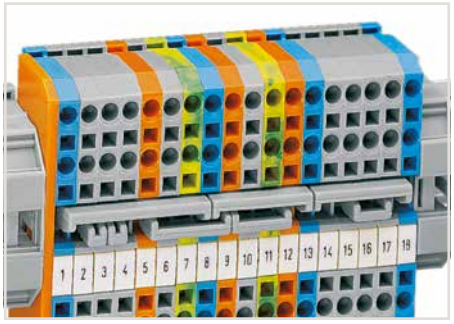

Staggered jumpers for sophisticated circuit requirements – push jumpers down until fully inserted.

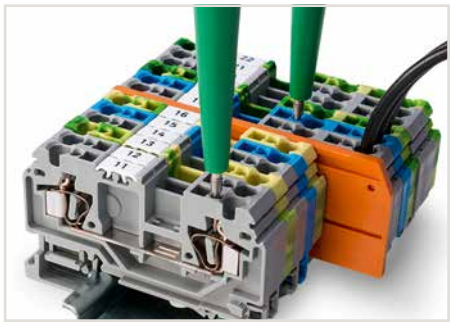

880 Series terminal blocks have an additional test slot for 2-pole voltage tester

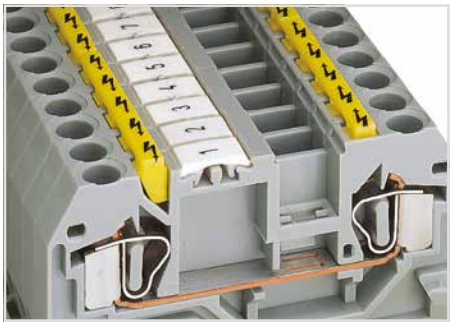

Protective warning markers inserted into the operating slots.



CAGE CLAMP® terminates the following copper conductors:
solid



stranded



fine-stranded, also with tinned single strands

For aluminum conductors, see notes in Section 14.

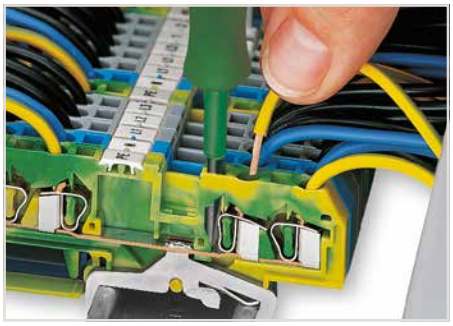

CAGE CLAMP® connection
Inserting a conductor.



CAGE CLAMP® connection
Inserting a conductor.
With ferruled conductors, it is necessary to use a terminal block one size larger than the conductor's nominal cross-section.



Testing with a test plug
(picture shows a test plug fitted with CAGE CLAMP®).

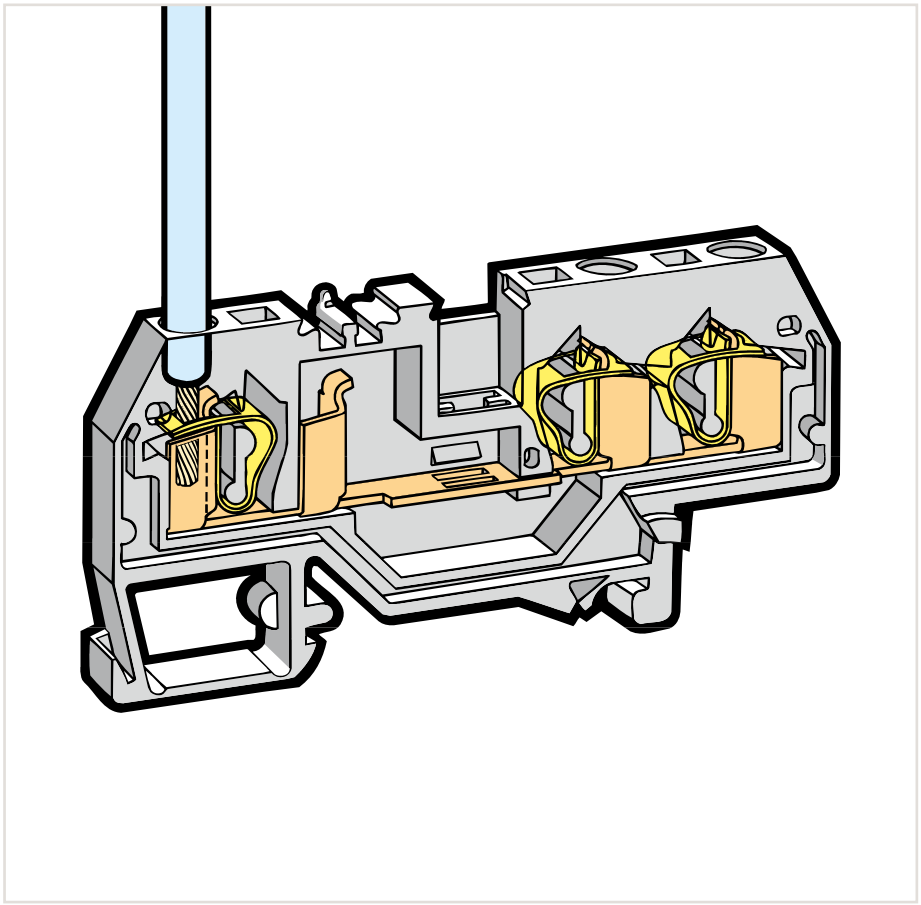

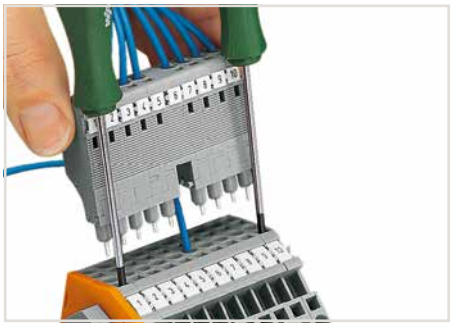

L-type test plug modules fitted with CAGE CLAMP®

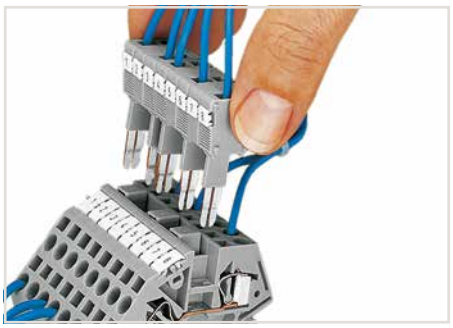

B-type test plug modules fitted with CAGE CLAMP®



Marking via WMB Multi Marking System.

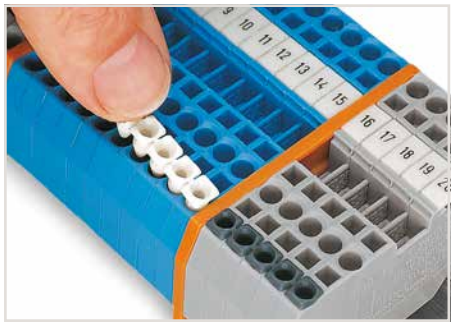

Inserting insulation stops.

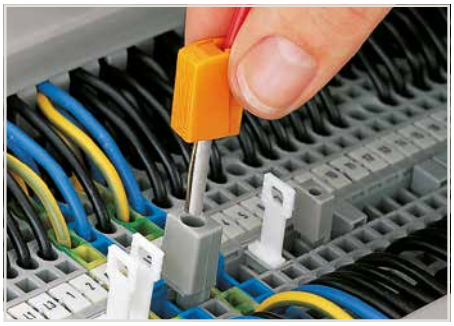

Testing with a test plug
(picture shows 209-170 Test Plug Adapter).



fine-stranded,
tip-bonded



fine-stranded,
with ferrule
(gastight crimped)



fine-stranded,
with pin terminal
(gastight crimped)

Through/Ground Conductor/Shield and Ex Terminal Blocks

1.5 mm², 279 Series

0.08 ... 1.5 mm²	28 ... 16 AWG	
800 V/8 kV/3 ❶	600 V, 10 A	
I_N 18 A	600 V, 10 A	
Terminal block width 4 mm / 0.157 inch		
8 ... 9 mm / 0.31 ... 0.35 inch		

0.08 ... 1.5 mm²	28 ... 16 AWG	
800 V/8 kV/3 ❶	600 V, 10 A	
I_N 18 A	600 V, 10 A	
Terminal block width 4 mm / 0.157 inch		
8 ... 9 mm / 0.31 ... 0.35 inch		

0.08 ... 1.5 mm²	28 ... 16 AWG	
800 V/8 kV/3 ❶	600 V, 10 A	
I_N 18 A	600 V, 10 A	
Terminal block width 4 mm / 0.157 inch		
8 ... 9 mm / 0.31 ... 0.35 inch		

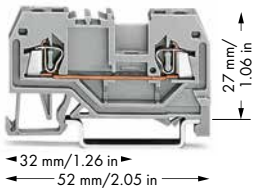

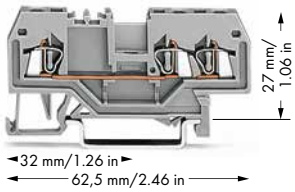

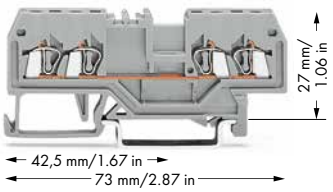

5

	Item No.	Pack. Unit
2-conductor through terminal block		
gray	**279-901**	100
blue	**279-904** ❷	100
orange	**279-902**	100
red	**279-903**	100
black	**279-905**	100
yellow	**279-906**	100
light gray Ex	**279-992** ❸	100
2-conductor ground terminal block		
green-yellow	**279-907**	100
green-yellow Ex	**279-907/999-950** ❸	100
Other terminal blocks with the same profile:		
Diode	**279-915/281-410**	Page 312

	Item No.	Pack. Unit
3-conductor through terminal block		
gray	**279-681**	100
blue	**279-684** ❷	100
orange	**279-682**	100
red	**279-683**	100
black	**279-685**	100
yellow	**279-686**	100
light gray Ex	**279-993** ❸	100
3-conductor ground terminal block		
green-yellow	**279-687**	100
green-yellow Ex	**279-687/999-950** ❸	100
Other terminal blocks with the same profile:		
Diode	**279-673/281-410**	Page 312
LED	**279-674/281-434**	Page 312

	Item No.	Pack. Unit
4-conductor through terminal block		
gray	**279-831**	100
blue	**279-834** ❷	100
orange	**279-832**	100
red	**279-833**	100
black	**279-835**	100
yellow	**279-836**	100
light gray Ex	**279-994** ❸	100
4-conductor ground terminal block		
green-yellow	**279-837**	100
green-yellow Ex	**279-837/999-950** ❸	100
4-conductor shield terminal block		
white	**279-838**	100
Other terminal blocks with the same profile:		
Diode	**279-815/281-410**	Page 312
LED	**279-809/281-434**	Page 312
Double-potential	**279-826**	Page 219

Item-Specific Accessories

End and intermediate plate, 2 mm thick

orange	**279-328**	100 (4x25)
gray	**279-325**	100 (4x25)
light gray	**279-330**	100 (4x25)

Separator, oversized, 2 mm thick



orange	**279-329**	100 (4x25)
gray	**279-326**	100 (4x25)
light gray	**279-331**	100 (4x25)

Separator for Ex e/Ex i applications, 3 mm thick, orange



90 mm	**209-190**	50 (2x25)
120 mm	**209-191**	50 (2x25)

Item-Specific Accessories

End and intermediate plate, 2 mm thick

orange	**279-339**	100 (4x25)
gray	**279-308**	100 (4x25)
light gray	**279-341**	100 (4x25)

Separator, oversized, 2 mm thick



orange	**279-340**	100 (4x25)
gray	**279-309**	100 (4x25)
light gray	**279-342**	100 (4x25)

Separator for Ex e/Ex i applications, 3 mm thick, orange



120 mm	**209-191**	50 (2x25)

Item-Specific Accessories

End and intermediate plate, 2 mm thick

orange	**279-346**	100 (4x25)
gray	**279-344**	100 (4x25)
light gray	**279-348**	100 (4x25)

Separator, oversized, 2 mm thick



orange	**279-347**	100 (4x25)
gray	**279-345**	100 (4x25)
light gray	**279-349**	100 (4x25)

Separator for Ex e/Ex i applications, 3 mm thick, orange



120 mm	**209-191**	50 (2x25)

Step-down cover plate, 1 mm thick



gray	**284-336**	100 (4x25)
orange	**284-346**	100 (4x25)

279 Series Accessories

Appropriate marking systems: WMB/WMB Inline/WFB
(see Section 13)

Insulation stop, 5 pcs/strip, 0.08 ... 0.2 mm² "s" (0.14 mm² "f-st") ❹

white	**279-470**	200 (8x25)

Insulation stop, 5 pcs/strip, 0.25 mm² ❹



dark gray	**279-471**	200 (8x25)

Adjacent jumper, insulated, I_N 15 A



gray	**279-402**	200 (8x25)
yellow-green	**279-422**	200 (8x25)

Alternate jumper, insulated, I_N 15 A



gray	**279-409**	100 (4x25)

Push-in type wire jumper, insulated, wire size 0.75 mm², I_N 9 A ❹



L = 60 mm	**249-125**	10
L = 110 mm	**249-126**	10
L = 250 mm	**249-127**	10

Overview of certification organizations, see page 654

Double-Potential and Ex Terminal Blocks

1.5 mm², 279 Series and 2.5 mm², 280 Series

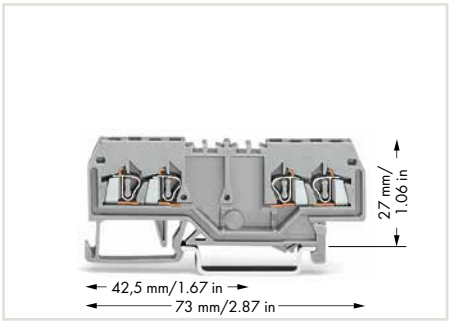

Double-potential terminal blocks, with double marker slot centered on terminal block
gray 279-826
light gray Ex 279-995
Packing unit: 100 pcs

Notice: These double potential terminal blocks cannot be commoned via adjacent jumpers.
Double-potential terminal blocks save space.
Two independent feedthrough circuits are placed in one insulated housing on one level in just 4 mm. This achieves a width of just 2 mm versus standard through terminal blocks.
Input and output of a circuit are placed on the same side of the terminal block. Both circuits can be individually marked according to input and output.

For technical data and accessories,
see www.wago.com

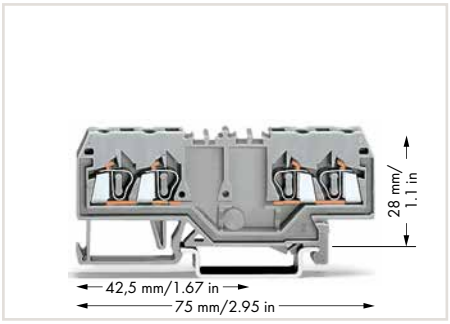

Double-potential terminal blocks, with double marker slot centered on terminal block
gray 280-826
light gray Ex 280-995
Packing unit: 100 pcs

Notice: These double potential terminal blocks cannot be commoned via adjacent jumpers.
Double-potential terminal blocks save space.
Two independent feedthrough circuits are placed in one insulated housing on one level in just 5 mm. This achieves a width of just 2.5 mm versus standard through terminal blocks.
Input and output of a circuit are placed on the same side of the terminal block. Both circuits can be individually marked according to input and output.

For technical data and accessories,
see www.wago.com

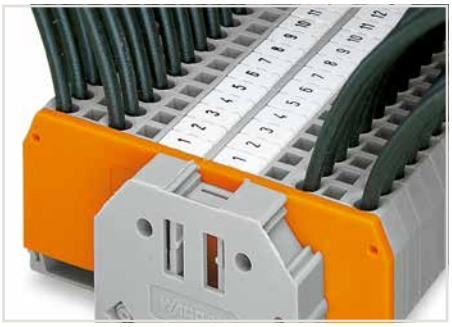

WMB markers provide marking directly on terminal block.



Terminal block marking with double marker carriers (209-128)
For terminal blocks with side marking,
see online catalog at www.wago.com

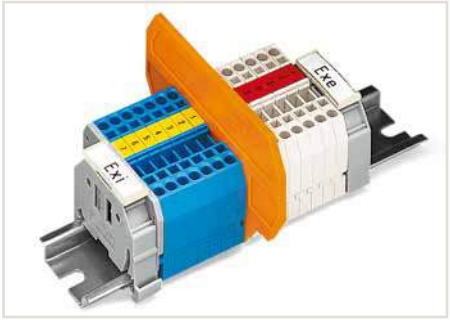

Separator for Ex e/Ex i applications
According to EN 50020, a minimum distance of 50 mm must be kept between live parts of Ex e and Ex i circuits. The use of Ex e/Ex i separators is a space-saving solution when Ex e and Ex i terminal blocks are mounted on a common carrier rail.
Compatible with 279 to 282 Series:
209-190 for 2-conductor terminal blocks
209-191 for 2-, 3-, 4-conductor terminal blocks



End and intermediate plate
In order to meet creepage and clearance requirements for Ex e applications, it is necessary to insert an end or intermediate plate between a through and a ground conductor terminal block.

❶ 800 V = rated voltage
8 kV = rated surge voltage
3 = pollution degree
(see Section 14)

❷ Suitable for Ex i applications

❸ Suitable for Ex e II applications
0.2 … 1.5 mm² / 24 … 16 AWG
550 V, 15 A
(see Section 14)

❹ See application notes for:
Insulation stop, page 331
Push-in type wire jumper, page 333
Step-down jumper, page 234
Banana plug, page 330
Comb-style jumper bar, page 332
Operating tool, page 332

5

279 Series Accessories

Step-down jumper, insulated, commons 10/6 mm² (8/10 AWG) down to 4/2.5/1.5 mm² (12/14/16 AWG), I_N 15 A			
❹	gray	**284-414**	50 (2x25)
Step-down cover plate, 1 mm thick			
	gray	**284-334**	100 (4x25)
	orange	**284-344**	100 (4x25)
Protective warning marker, with black high-voltage symbol, for 5 terminal blocks			
	yellow	**279-415**	100 (4x25)
Test plug adapter, 8.3 mm wide, for 4 mm Ø test plug, for 1.5 … 10 mm² terminal blocks			
	gray	**209-170**	50 (2x25)
Banana plug, for 4 mm socket diameter, color mixed, 10 x			
❹	orange, white, black, blue, yellow	**215-111**	50
Test plug adapter, 5 mm wide, for 210-137 Test Plug (2.3 mm Ø), for 1.5 … 4 mm² terminal blocks			
	gray	**280-404**	100 (4x25)
Test plug, with 500 mm cable, 2.3 mm Ø, max. 42 V			
	yellow	**210-137**	50
Comb-style jumper bar, insulated, I_N = I_N terminal block			
❹	2-way	**279-482**	200 (8x25)
	3-way	**279-483**	200 (8x25)
Comb-style jumper bar, insulated, I_N = I_N terminal block			
	10-way	**279-490**	50 (2x25)
Alternate comb-style jumper bar, insulated, I_N = I_N terminal block			
	2-way	**279-492**	200 (8x25)
Operating tool, of insulating material			
	2-way	**279-432**	1
	3-way	**279-433**	1
Operating tool, of insulating material			
	10-way	**279-440**	1

Through/Ground Conductor/Shield and Ex Terminal Blocks

2.5 mm², 280 Series

0.08 … 2.5 mm²	28 … 12 AWG*	
800 V/8 kV/3 ❶	600 V, 20 A	
I_N 24 A	600 V, 25 A	
Terminal block width 5 mm / 0.197 inch		
8 … 9 mm / 0.31 … 0.35 inch		

0.08 … 2.5 mm²	28 … 12 AWG*	
800 V/8 kV/3 ❶	600 V, 20 A	
I_N 24 A	600 V, 15 A	
Terminal block width 5 mm / 0.197 inch		
8 … 9 mm / 0.31 … 0.35 inch		

0.08 … 2.5 mm²	28 … 12 AWG*	
800 V/8 kV/3 ❶	600 V, 20 A	
I_N 20 A	600 V, 25 A	
Terminal block width 5 mm / 0.197 inch		
8 … 9 mm / 0.31 … 0.35 inch		

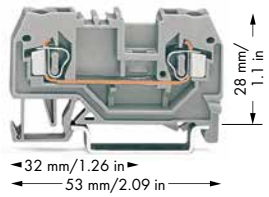

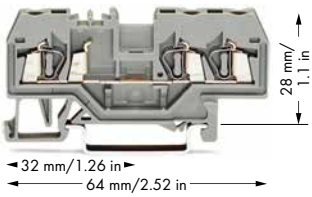

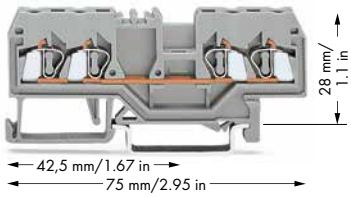

5

	Item No.	Pack. Unit
2-conductor through terminal block		
gray	**280-901**	100
blue	**280-904** ❷	100
orange	**280-902**	100
red	**280-903**	100
black	**280-905**	100
yellow	**280-906**	100
light gray Ex	**280-992** ❸	100
2-conductor ground terminal block		
green-yellow	**280-907**	100
green-yellow Ex	**280-907/999-950** ❸	100
Other terminal blocks with the same profile:		
Diode	**280-915/281-410**	Page 314
Disconnect	**280-912**	Page 262
Carrier	**280-916**	Page 288

	Item No.	Pack. Unit
3-conductor through terminal block		
gray	**280-681**	100
blue	**280-684** ❷	100
orange	**280-650**	100
red	**280-653**	100
black	**280-671**	100
yellow	**280-672**	100
light gray Ex	**280-993** ❸	100
3-conductor ground terminal block		
green-yellow	**280-687**	100
green-yellow Ex	**280-687/999-950** ❸	100
Other terminal blocks with the same profile:		
Diode	**280-673/281-410**	Page 314
Disconnect	**280-683**	Page 262
Carrier	**280-610**	Page 288

	Item No.	Pack. Unit
4-conductor through terminal block		
gray	**280-833**	100
blue	**280-834** ❷	100
orange	**280-835**	100
red	**280-830**	100
black	**280-831**	100
yellow	**280-832**	100
light gray Ex	**280-994** ❸	100
4-conductor ground terminal block		
green-yellow	**280-837**	100
green-yellow Ex	**280-837/999-950** ❸	100
4-conductor shield terminal block		
white	**280-838**	100
Other terminal blocks with the same profile:		
Diode	**280-815/281-410**	Page 314
LED	**280-809/281-434**	Page 314
Disconnect	**280-836**	Page 262
Disc., test & meas.	**280-829**	Page 262
Carrier	**280-816**	Page 288
Double-potential	**280-826**	Page 219

Item-Specific Accessories

End and intermediate plate, 2.5 mm thick			
	orange	**280-309**	100 (4x25)
	gray	**280-308**	100 (4x25)
	light gray	**280-356**	100 (4x25)
Separator, oversized, 2 mm thick			
	orange	**280-311**	100 (4x25)
	gray	**280-310**	100 (4x25)
	light gray	**280-357**	100 (4x25)
Separator for Ex e/Ex i applications, 3 mm thick, orange			
	90 mm	**209-190**	50 (2x25)
	120 mm	**209-191**	50 (2x25)
Spacer with same profile, for 2-conductor terminal blocks			
	of horizontal type, 5 mm thick		
	orange	**280-902/056-000**	100 (4x25)

End and intermediate plate, 2.5 mm thick			
	orange	**280-326**	100 (4x25)
	gray	**280-324**	100 (4x25)
	light gray	**280-358**	100 (4x25)
Separator, oversized, 2 mm thick			
	orange	**280-346**	100 (4x25)
	gray	**280-344**	100 (4x25)
	light gray	**280-359**	100 (4x25)
Separator for Ex e/Ex i applications, 3 mm thick, orange			
	120 mm	**209-191**	50 (2x25)
Spacer with same profile, for 3-conductor terminal blocks			
	of horizontal type, 5 mm thick		
	orange	**280-650/056-000**	100

End and intermediate plate, 2.5 mm thick			
	orange	**280-315**	100 (4x25)
	gray	**280-314**	100 (4x25)
	light gray	**280-352**	100 (4x25)
Separator, oversized, 2 mm thick			
	orange	**280-335**	100 (4x25)
	gray	**280-334**	100 (4x25)
	light gray	**280-353**	100 (4x25)
Separator for Ex e/Ex i applications, 3 mm thick, orange			
	120 mm	**209-191**	50 (2x25)
Spacer with same profile, for 4-conductor terminal blocks			
	of horizontal type, 5 mm thick		
	orange	**280-835/056-000**	100 (4x25)
Step-down cover plate, 1 mm thick			
	gray	**284-336**	100 (4x25)
	orange	**284-346**	100 (4x25)

Accessories for 280 Series

* 12 AWG: THHN, THWN

❶ 800 V = rated voltage
8 kV = rated surge voltage
3 = pollution degree
(see Section 14)

❷ Suitable for Ex i applications

❸ Suitable for Ex e II applications
0.2 … 2.5 mm² / 24 … 12 AWG*
550 V
23 A for 2-conductor terminal blocks
22 A for 3-conductor terminal blocks
20 A for 4-conductor terminal blocks
(see Section 14)
Using staggered jumpers reduces the maximum rated voltage to 275 V.

❹ See application notes for:
Insulation stop, page 331
Staggered jumper, page 333
Push-in type wire jumper, page 333
Comb-style jumper bar, page 332
Operating tool, page 332
Step-down jumper, page 234
Test plug modules, page 326
Banana plug, page 330

5

280 Series Accessories

Appropriate marking systems: WMB/WMB Inline/WFB
(see Section 13)

Insulation stop, 5 pcs/strip, 0.08 … 0.2 mm² "s"
❹ (0.14 mm² "f-st")



white	**280-470**	200	(8x25)

Insulation stop, 5 pcs/strip, 0.25 … 0.5 mm²
❹



light gray	**280-471**	200	(8x25)

Insulation stop, 5 pcs/strip, 0.75 … 1 mm²
❹



dark gray	**280-472**	200	(8x25)

Adjacent jumper, insulated, I_N = I_N terminal block



gray	**280-402**	200	(8x25)
yellow-green	**280-422**	200	(8x25)

Alternate jumper, insulated, I_N = I_N terminal block



gray	**280-409**	100	(4x25)

Staggered jumper, insulated, Spacing: 5 mm, I_N 24 A
❹



from 1 to 2	**780-452**	100	(4x25)
from 1 to 3	**780-453**	100	(4x25)
from 1 to 4	**780-454**	100	(4x25)
from 1 to 5	**780-455**	50	(2x25)
from 1 to 6	**780-456**	50	(2x25)
from 1 to 7	**780-457**	50	(2x25)
from 1 to 8	**780-458**	50	(2x25)

Push-in type wire jumper, insulated, wire size 0.75 mm², I_N 9 A
❹



L = 60 mm	**249-125**	10
L = 110 mm	**249-126**	10
L = 250 mm	**249-127**	10

Comb-style jumper bar, insulated, I_N = I_N terminal block
❹



2-way	**280-482**	200	(8x25)
3-way	**280-483**	200	(8x25)

Comb-style jumper bar, insulated, I_N = I_N terminal block



10-way	**280-490**	50	(2x25)

Alternate comb-style jumper bar, insulated, I_N = I_N terminal block



2-way	**280-492**	200	(8x25)

Operating tool, of insulating material



2-way	**280-432**	1
3-way	**280-433**	1

Operating tool, of insulating material



10-way	**280-440**	1

Step-down jumper, insulated, commons 10/6 mm² (8/10 AWG) down to 4/2.5/1.5 mm² (12/14/16 AWG), I_N 15 A
❹



gray	**284-414**	50	(2x25)

Step-down cover plate, 1 mm thick



gray	**284-334**	100	(4x25)
orange	**284-344**	100	(4x25)

Protective warning marker, with black high-voltage symbol, for 5 terminal blocks



yellow	**280-415**	100	(4x25)

Test plug module, snaps together, 5 mm wide
❹



gray	**280-418**	100	(4x25)

Spacer module, snaps together, 5 mm wide



gray	**280-419**	100	(4x25)

Test plug, with 500 mm cable, 2 mm Ø, max. 42 V



red	**210-136**	50	

Test plug, with 500 mm cable, 2.3 mm Ø, max. 42 V



yellow	**210-137**	50	

Test plug adapter, 5 mm wide, for 210-137 Test Plug (2.3 mm Ø), for 1.5 … 4 mm² terminal blocks



gray	**280-404**	100	(4x25)

Test plug adapter, 8.3 mm wide, for 4 mm Ø test plug, for 1.5 … 10 mm² terminal blocks



gray	**209-170**	50	(2x25)

Banana plug, for 4 mm socket diameter, color mixed, 10 x
❹ orange, white, black, blue, yellow



215-111		50

Test plug adapter, 6 mm wide, with CAGE CLAMP®, for



0.08 … 2.5 mm²

I_N 24 A	**281-407**	100 (4x25)

WMB Inline, plain, 1,500 WMB markers (5 mm) per reel, 5 … 5.2 mm stretchable



white	**2009-115**	1

WMB Multi marking system, white, 10 strips with 10 markers per card, 5 … 5.2 mm stretchable

plain	**793-5501**	5

WMB Multi marking system, plain, 10 strips with 10 markers per card, 5 … 5.2 mm stretchable



yellow	**793-5501/000-002**	
red	**793-5501/000-005**	
blue	**793-5501/000-006**	
gray	**793-5501/000-007**	
orange	**793-5501/000-012**	
light green	**793-5501/000-017**	
green	**793-5501/000-023**	
violet	**793-5501/000-024**	

5

Screwless end stop, for DIN-35 rail, 6 mm wide



gray	**249-116**	100	(4x25)

Screwless end stop, for DIN-35 rail, 10 mm wide



gray	**249-117**	50	(2x25)

Through/Ground Conductor/Shield and Ex Terminal Blocks

2.5 mm², 280 Series

0.08 ... 2.5 mm² | 28 ... 12 AWG*
800 V/8 kV/3 ❶ | 600 V, 20 A
I_N 24 A

Terminal block width 5 mm / 0.197 inch
8 ... 9 mm / 0.31 ... 0.35 inch

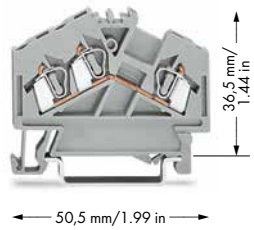

* 12 AWG: THHN, THWN

❶ 800 V = rated voltage
8 kV = rated surge voltage
3 = pollution degree
(see Section 14)

❷ Suitable for Ex i applications

❸ Suitable for Ex e II applications
0.2 ... 2.5 mm² / 24 ... 12 AWG*
550 V, 23 A
(see Section 14)
Using staggered jumpers reduces the maximum rated voltage to 275 V.

❹ See application notes for:
Insulation stop, page 331
Staggered jumper, page 333
Push-in type wire jumper, page 333
Comb-style jumper bar, page 332
Operating tool, page 332
Test plug modules, page 326
Banana plug, page 330

5

	Item No.	Pack. Unit
3-conductor through terminal block		
gray	**280-641**	100
blue	**280-651** ❷	100
orange	**280-654**	100
light gray Ex	**280-998** ❸	100
3-conductor ground terminal block		
green-yellow	**280-637**	100
green-yellow Ex	**280-637/999-950** ❸	100
3-conductor shield terminal block		
white	**280-640**	100

280 Series Accessories

End and intermediate plate, 2.5 mm thick



orange	**280-313**	100 (4x25)
gray	**280-312**	100 (4x25)
light gray	**280-354**	100 (4x25)

Separator, oversized, 2.5 mm thick



orange	**280-318**	100 (4x25)
gray	**280-348**	100 (4x25)
light gray	**280-355**	100 (4x25)

Separator for Ex e/Ex i applications, 3 mm thick, orange



120 mm **209-191** 50 (2x25)

Spacer with same profile, for 3- and 4-conductor terminal blocks of angled type, 5 mm thick



orange **280-654/056-000** 100 (4x25)

Insulation stop, 5 pcs/strip, 0.08 ... 0.2 mm² "s" (0.14 mm² "f-st") ❹



white **280-470** 200 (8x25)

Insulation stop, 5 pcs/strip, 0.25 ... 0.5 mm² ❹



light gray **280-471** 200 (8x25)

Insulation stop, 5 pcs/strip, 0.75 ... 1 mm² ❹



dark gray **280-472** 200 (8x25)

Adjacent jumper, insulated, I_N = I_N terminal block



gray **280-402** 200 (8x25)

Alternate jumper, insulated, I_N = I_N terminal block



gray **280-409** 100 (4x25)

Staggered jumper, insulated, Spacing: 5 mm, I_N 24 A ❹



from 1 to 2	**780-452**	100 (4x25)
from 1 to 3	**780-453**	100 (4x25)
from 1 to 4	**780-454**	100 (4x25)
from 1 to 5	**780-455**	50 (2x25)
from 1 to 6	**780-456**	50 (2x25)
from 1 to 7	**780-457**	50 (2x25)
from 1 to 8	**780-458**	50 (2x25)

Push-in type wire jumper, insulated, wire size 0.75 mm², I_N 9 A ❹



L = 60 mm	**249-125**	10
L = 110 mm	**249-126**	10
L = 250 mm	**249-127**	10

Comb-style jumper bar, insulated, I_N = I_N terminal block ❹



2-way	**280-482**	200 (8x25)
3-way	**280-483**	200 (8x25)

Alternate comb-style jumper bar, insulated, I_N = I_N terminal block



2-way **280-492** 200 (8x25)

Operating tool, of insulating material



2-way	**280-432**	1
3-way	**280-433**	1

Protective warning marker, with black high-voltage symbol, for 5 terminal blocks



yellow **280-415** 100 (4x25)

Test plug module, snaps together, 5 mm wide ❹



gray **280-418** 100 (4x25)

Spacer module, snaps together, 5 mm wide



gray **280-419** 100 (4x25)

Test plug, with 500 mm cable, 2 mm Ø, max. 42 V



red **210-136** 50

Test plug, with 500 mm cable, 2.3 mm Ø, max. 42 V



yellow **210-137** 50

Test plug adapter, 5 mm wide, for 210-137 Test Plug (2.3 mm Ø), for 1.5 ... 4 mm² terminal blocks

gray **280-404** 100 (4x25)

Test plug adapter, 8.3 mm wide, for 4 mm Ø test plug, for 1.5 ... 10 mm² terminal blocks

gray **209-170** 50 (2x25)

Banana plug, for 4 mm socket diameter, color mixed, 10 x ❹



orange, white, black, blue, yellow **215-111** 50

Test plug adapter, 6 mm wide, with CAGE CLAMP®, for 0.08 ... 2.5 mm²

I_N 24 A **281-407** 100 (4x25)

WMB Multi marking system, white, 10 strips with 10 markers per card, 5 ... 5.2 mm stretchable

plain **793-5501** 5

WMB Multi marking system, plain, 10 strips with 10 markers per card, 5 ... 5.2 mm stretchable



yellow	**793-5501/000-002**
red	**793-5501/000-005**
blue	**793-5501/000-006**
gray	**793-5501/000-007**
orange	**793-5501/000-012**
light green	**793-5501/000-017**
green	**793-5501/000-023**
violet	**793-5501/000-024**

5

Screwless end stop, for DIN-35 rail, 6 mm wide



gray **249-116** 100 (4x25)

Screwless end stop, for DIN-35 rail, 10 mm wide



gray **249-117** 50 (2x25)

Through and Ex Terminal Blocks

2.5 mm², 280 Series

0.08 ... 2.5 mm²	28 ... 12 AWG*
800 V/8 kV/3 ❶	600 V, 20 A
I_N 24 A	600 V, 25 A

Terminal block width 5 mm / 0.197 inch
8 ... 9 mm / 0.31 ... 0.35 inch

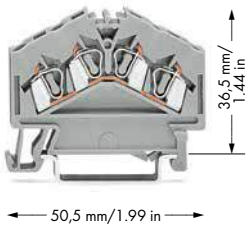

* 12 AWG: THHN,THWN

❶ 800 V = rated voltage
8 kV = rated surge voltage
3 = pollution degree
(see Section 14)

❷ Suitable for Ex i applications

❸ Suitable for Ex e II applications
0.2 ... 2.5 mm² / 24 ... 12 AWG*
550 V, 23 A
(see Section 14)

❹ See application notes for:
Insulation stop, page 331
Comb-style jumper bar, page 332
Operating tool, page 332
Test plug module, page 326

	Item No.	Pack. Unit
4-conductor through terminal block		
gray	280-646	100
blue	280-656 ❷	100
orange	280-946	100
light gray	280-996 ❸	100

Notice:
These terminal blocks cannot be commoned using adjacent jumpers

280 Series Accessories

End and intermediate plate, 2.5 mm thick

orange	280-313	100 (4x25)
gray	280-312	100 (4x25)
light gray	280-354	100 (4x25)

Separator, oversized, 2.5 mm thick

orange	280-318	100 (4x25)
gray	280-348	100 (4x25)
light gray	280-355	100 (4x25)

Separator for Ex e/Ex i applications, 3 mm thick, orange

120 mm	209-191	50 (2x25)

Spacer with same profile, for 3- and 4-conductor terminal blocks of angled type, 5 mm thick

orange	280-654/056-000	100 (4x25)

❹ Insulation stop, 5 pcs/strip, 0.08 ... 0.2 mm² "s" (0.14 mm² "f-st")

white	280-470	200 (8x25)

❹ Insulation stop, 5 pcs/strip, 0.25 ... 0.5 mm²

light gray	280-471	200 (8x25)

❹ Insulation stop, 5 pcs/strip, 0.75 ... 1 mm²

dark gray	280-472	200 (8x25)

❹ Comb-style jumper bar, insulated, I_N = I_N terminal block

2-way	280-482	200 (8x25)
3-way	280-483	200 (8x25)

Comb-style jumper bar, insulated, I_N = I_N terminal block

10-way	280-490	50 (2x25)

280 Series Accessories

Appropriate marking systems (see Section 13)

Alternate comb-style jumper bar, insulated, I_N = I_N terminal block

2-way	280-492	200 (8x25)

Operating tool, of insulating material

2-way	280-432	1
3-way	280-433	1

Operating tool, of insulating material

10-way	280-440	1

Protective warning marker, with black high-voltage symbol, for 5 terminal blocks

yellow	280-415	100 (4x25)

❹ L-type test plug module, snaps together, 5 mm wide

gray	249-141	100 (4x25)

WMB Inline, plain, 1,500 WMB markers (5 mm) per reel, 5 ... 5.2 mm stretchable

white	2009-115	1

WMB Multi marking system, white, 10 strips with 10 markers per card, 5 ... 5.2 mm stretchable

plain	793-5501	5

WMB Multi marking system, plain, 10 strips with 10 markers per card, 5 ... 5.2 mm stretchable

yellow	793-5501/000-002
red	793-5501/000-005
blue	793-5501/000-006
gray	793-5501/000-007
orange	793-5501/000-012
light green	793-5501/000-017
green	793-5501/000-023
violet	793-5501/000-024

5

Screwless end stop, for DIN-35 rail, 6 mm wide

gray	249-116	100 (4x25)

Screwless end stop, for DIN-35 rail, 10 mm wide

gray	249-117	50 (2x25)

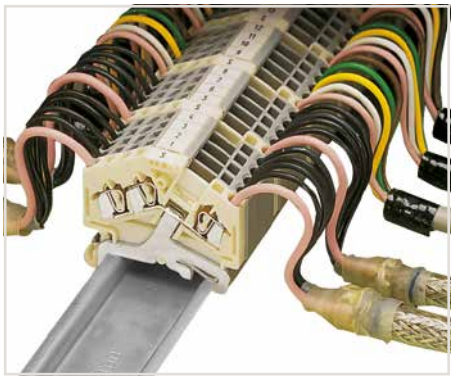

Application example for shield conductor terminal blocks

Shielded control cables are becoming an increasingly common solution to external signal interference. Front-entry shield conductor terminal blocks are ideal for connecting braided cables. Like front-entry ground conductor terminal blocks, they are equipped with a grounding foot for direct electrical connection to the rail, however they differ significantly by their white insulated housing. Shield conductor terminal blocks for front-entry wiring can be directly mounted beside signal-conductor terminal blocks, providing excellent deflection of interfering signals.

Through and Ground Conductor Terminal Blocks, 5 mm Wide, for 12 AWG Specialty Conductors with Ferrules (216-206)

4 mm², 880 Series

0.08 … 4 mm² | 28 … 12 AWG 800 V/8 kV/3 ❶ | 600 V, 20 A I_N 25 A Terminal block width 5 mm / 0.197 inch 8 … 9 mm / 0.31 … 0.35 inch	0.08 … 4 mm² | 28 … 12 AWG 800 V/8 kV/3 ❶ | 600 V, 20 A I_N 25 A Terminal block width 5 mm / 0.197 inch 8 … 9 mm / 0.31 … 0.35 inch	0.08 … 4 mm² | 28 … 12 AWG 800 V/8 kV/3 ❶ | 600 V, 20 A I_N 20 A Terminal block width 5 mm / 0.197 inch 8 … 9 mm / 0.31 … 0.35 inch

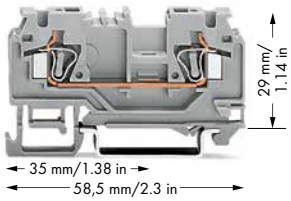

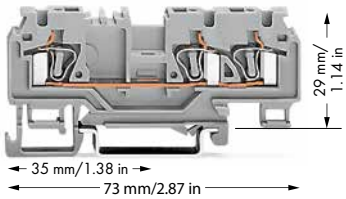

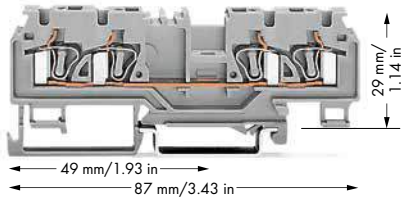

5

Item No.		Pack. Unit
2-conductor through terminal block, no shield contact, with test slot for 2 and 2.3 mm Ø test plugs, for specialty conductors, 4.4 mm insulation diameter (max.)		
gray	**880-901/999-940**	100
blue	**880-904/999-940** ❷	100
orange	**880-902/999-940**	100
2-conductor through terminal block with shield contact on request		
2-conductor ground terminal block		
green-yellow	**880-907/999-940**	100

Item No.		Pack. Unit
3-conductor through terminal block, no shield contact, with test slot for 2 and 2.3 mm Ø test plugs, for specialty conductors, 4.4 mm insulation diameter (max.)		
gray	**880-681/999-940**	100
blue	**880-684/999-940** ❷	100
orange	**880-682/999-940**	100
3-conductor through terminal block with shield contact on request		
3-conductor ground terminal block		
green-yellow	**880-687/999-940**	100

Item No.		Pack. Unit
4-conductor through terminal block, no shield contact, with test slot for 2 and 2.3 mm Ø test plugs, for specialty conductors, 4.4 mm insulation diameter (max.)		
gray	**880-831/999-940**	50
blue	**880-834/999-940** ❷	50
orange	**880-832/999-940**	50
4-conductor ground terminal block		
green-yellow	**880-837/999-940**	50

Item-Specific Accessories

End and intermediate plate, 2.5 mm thick			
orange	**880-328**	100 (4x25)	
gray	**880-325**	100 (4x25)	
Separator, oversized, 2 mm thick			
orange	**880-329**	100 (4x25)	
gray	**880-326**	100 (4x25)	

Item-Specific Accessories

End and intermediate plate, 2.5 mm thick		
orange	**880-339**	100 (4x25)
gray	**880-308**	100 (4x25)
Separator, oversized, 2 mm thick		
orange	**880-340**	100 (4x25)
gray	**880-309**	100 (4x25)

Item-Specific Accessories

End and intermediate plate, 2.5 mm thick		
orange	**880-346**	100 (4x25)
gray	**880-344**	100 (4x25)
Separator, oversized, 2 mm thick		
orange	**880-347**	100 (4x25)
gray	**880-345**	100 (4x25)

880 Series Accessories

Appropriate marking systems: WMB/WMB Inline/Mini-WSB/Mini-WSB Inline/WFB (see Section 13)

Insulation stop, 5 pcs/strip, 0.08 … 0.2 mm² "s" (0.14 mm² "f-st") ❸		
white	**280-470**	200 (8x25)
Insulation stop, 5 pcs/strip, 0.25 … 0.5 mm² ❸		
light gray	**280-471**	200 (8x25)
Insulation stop, 5 pcs/strip, 0.75 … 1 mm² ❸		
dark gray	**280-472**	200 (8x25)
Adjacent jumper, insulated, I_N = I_N terminal block		
gray	**280-402**	200 (8x25)
yellow-green	**280-422**	200 (8x25)
Alternate jumper, insulated, I_N = I_N terminal block		
gray	**280-409**	100 (4x25)
Protective warning marker, with black high-voltage symbol, for 5 terminal blocks		
yellow	**280-415**	100 (4x25)

Staggered jumper, insulated, Spacing: 5 mm, I_N 24 A ❸		
from 1 to 2	**780-452**	100 (4x25)
from 1 to 3	**780-453**	100 (4x25)
from 1 to 4	**780-454**	100 (4x25)
from 1 to 5	**780-455**	50 (2x25)
from 1 to 6	**780-456**	50 (2x25)
from 1 to 7	**780-457**	50 (2x25)
from 1 to 8	**780-458**	50 (2x25)
Push-in type wire jumper, insulated, wire size 0.75 mm², I_N 9 A ❸		
L = 60 mm	**249-125**	10
L = 110 mm	**249-126**	10
L = 250 mm	**249-127**	10
Comb-style jumper bar, insulated, I_N = I_N terminal block ❸		
2-way	**280-482**	200 (8x25)
3-way	**280-483**	200 (8x25)

Comb-style jumper bar, insulated, I_N = I_N terminal block		
10-way	**280-490**	50 (2x25)
Alternate comb-style jumper bar, insulated, I_N = I_N terminal block		
2-way	**280-492**	200 (8x25)
Operating tool, of insulating material		
2-way	**280-432**	1
3-way	**280-433**	1
Operating tool, of insulating material		
10-way	**280-440**	1
Test plug module, snaps together, 5 mm wide ❸		
gray	**280-418**	100 (4x25)
Spacer module, snaps together, 5 mm wide		
gray	**280-419**	100 (4x25)

Overview of certification organizations, see page 654

880 Series Features

❶ 800 V = rated voltage
8 kV = rated surge voltage
3 = pollution degree

with shield contact
400 V/6 kV/3
c UL us 300 V/10 A
(see Section 14)

❷ Suitable for Ex i applications

❸ See application notes for:
Insulation stop, page 331
Staggered jumper, page 333
Push-in type wire jumper, page 333
Comb-style jumper bar, page 332
Operating tool, page 332
Test plug modules, page 326
Banana plug, page 330

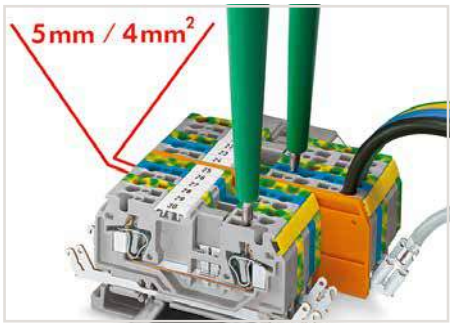

Features:
- 2-, 3- and 4-conductor terminal blocks, just 5 mm wide
- Conductor cross section up to 4 mm² (per VDE 0281) or 12 AWG with ferrule (Item No. 216-206) 2.5 mm² rubber-insulated conductors with outer diameter up to 4.4 mm
- Shield contact, solder/quick-connect contact 6.3 (2 x 2.8) mm
- Test plug, red, 2 mm Ø
- Test plug, yellow, 2.3 mm Ø
- WMB markers
- Mini-WSB markers, on both sides
- Commoning with WAGO jumper systems

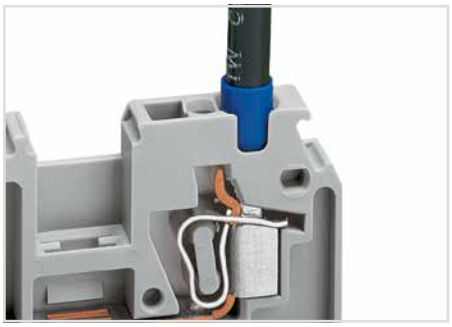

Using a 12 AWG conductor with ferrule.
Item No. 216-206

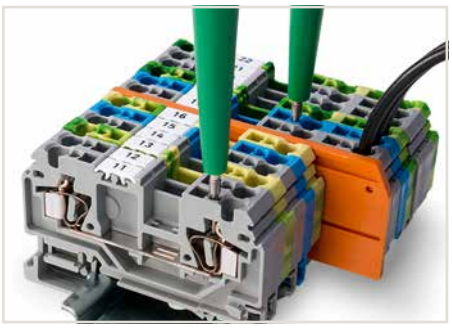

880 Series terminal blocks have an additional test slot for 2-pole voltage tester

880 Series Accessories

Test plug, with 500 mm cable, 2.3 mm Ø, max. 42 V			
	yellow	**210-137**	50
Test plug, with 500 mm cable, 2 mm Ø, max. 42 V			
	red	**210-136**	50
Test plug adapter, 5 mm wide, for 210-137 Test Plug (2.3 mm Ø), for 1.5 … 4 mm² terminal blocks			
	gray	**280-404**	100 (4x25)
Test plug adapter, 8.3 mm wide, for 4 mm Ø test plug, for 1.5 … 10 mm² terminal blocks			
	gray	**209-170**	50 (2x25)
Banana plug, for 4 mm socket diameter, color mixed, 10 x			
❸ 	orange, white, black, blue, yellow	**215-111**	50
Test plug adapter, 6 mm wide, with CAGE CLAMP®, for 0.08 … 2.5 mm²			
	I_N 24 A	**281-407**	100 (4x25)
WMB Inline, plain, 1,500 WMB markers (5 mm) per reel, 5 … 5.2 mm stretchable			
	white	**2009-115**	1
WMB Multi marking system, white, 10 strips with 10 markers per card, 5 … 5.2 mm stretchable			
	plain	**793-5501**	5
Mini-WSB Quick marking system, white, 10 strips with 10 markers per card, 5 mm wide markers			
	plain	**248-501**	5
Screwless end stop, for DIN-35 rail, 6 mm wide			
	gray	**249-116**	100 (4x25)
Screwless end stop, for DIN-35 rail, 10 mm wide			
	gray	**249-117**	50 (2x25)

Through/Ground Conductor/Shield and Ex Terminal Blocks

4 mm², 281 Series

0.08 … 4 mm²	28 … 12 AWG	
800 V/8 kV/3 ❶	600 V, 20 A	
I_N 32 A	600 V, 25 A	
Terminal block width 6 mm / 0.236 inch		
9 … 10 mm / 0.35 … 0.39 inch		

0.08 … 4 mm²	28 … 12 AWG	
800 V/8 kV/3 ❶	600 V, 20 A	
I_N 32 A	600 V, 25 A	
Terminal block width 6 mm / 0.236 inch		
9 … 10 mm / 0.35 … 0.39 inch		

0.08 … 4 mm²	28 … 12 AWG	
800 V/8 kV/3 ❶	600 V, 20 A	
I_N 26 A	600 V, 25 A	
Terminal block width 6 mm / 0.236 inch		
9 … 10 mm / 0.35 … 0.39 inch		

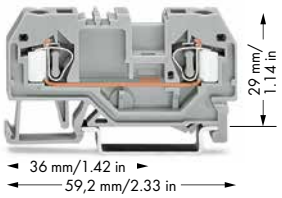

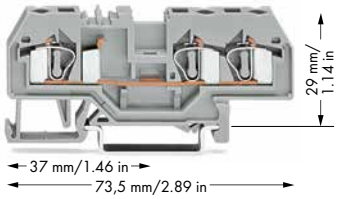

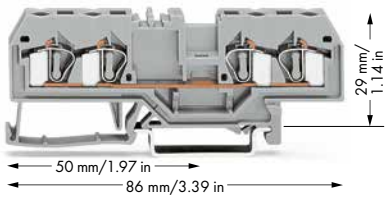

5

	Item No.	Pack. Unit
2-conductor through terminal block		
gray	**281-901**	50
blue	**281-904** ❷	50
orange	**281-902**	50
red	**281-903**	50
black	**281-905**	50
yellow	**281-906**	50
light gray Ex	**281-992** ❸	50
2-conductor ground terminal block		
green-yellow	**281-907**	50
green-yellow Ex	**281-907/999-950** ❸	50
Other terminal blocks with the same profile:		
Diode	**281-915/281-410**	Page 316
Disconnect	**281-912**	Page 264
Carrier	**281-916**	Page 248

	Item No.	Pack. Unit
3-conductor through terminal block		
gray	**281-681**	50
blue	**281-684** ❷	50
orange	**281-678**	50
red	**281-679**	50
black	**281-685**	50
yellow	**281-686**	50
light gray Ex	**281-993** ❸	50
3-conductor ground terminal block		
green-yellow	**281-687**	50
green-yellow Ex	**281-687/999-950** ❸	50
Other terminal blocks with the same profile:		
Diode	**281-673/281-410**	Page 316
Disconnect	**281-683**	Page 264
Carrier	**281-610**	Page 248

	Item No.	Pack. Unit
4-conductor through terminal block		
gray	**281-652**	50
blue	**281-654** ❷	50
orange	**281-653**	50
red	**281-663**	50
black	**281-664**	50
yellow	**281-668**	50
light gray Ex	**281-994** ❸	50
4-conductor ground terminal block		
green-yellow	**281-657**	50
green-yellow Ex	**281-657/999-950** ❸	50
4-conductor shield terminal block		
white	**281-658**	50
Other terminal blocks with the same profile:		
Diode	**281-665/281-410**	Page 316
Disconnect	**281-659**	Page 264
Disc., test & meas.	**281-666**	Page 264
Carrier	**281-656**	Page 286

Item-Specific Accessories

End and intermediate plate, 2.5 mm thick



orange	**281-329**	100 (4x25)
gray	**281-328**	100 (4x25)
light gray	**281-349**	100 (4x25)

Separator, oversized, 2 mm thick



orange	**281-331**	100 (4x25)
gray	**281-330**	100 (4x25)
light gray	**281-350**	100 (4x25)

Separator for Ex e/Ex i applications, 3 mm thick, orange



120 mm	**209-191**	50 (2x25)
90 mm	**209-190**	50 (2x25)

Item-Specific Accessories

End and intermediate plate, 2.5 mm thick



orange	**281-326**	100 (4x25)
gray	**281-324**	100 (4x25)
light gray	**281-355**	100 (4x25)

Separator, oversized, 2 mm thick



orange	**281-346**	100 (4x25)
gray	**281-344**	100 (4x25)
light gray	**281-356**	100 (4x25)

Separator for Ex e/Ex i applications, 3 mm thick, orange



120 mm	**209-191**	50 (2x25)

Item-Specific Accessories

End and intermediate plate, 2.5 mm thick



orange	**281-335**	100 (4x25)
gray	**281-334**	100 (4x25)
light gray	**281-345**	100 (4x25)

Separator, oversized, 2 mm thick



orange	**281-339**	100 (4x25)
gray	**281-338**	100 (4x25)
light gray	**281-347**	100 (4x25)

Separator for Ex e/Ex i applications, 3 mm thick, orange



120 mm	**209-191**	50 (2x25)

Step-down cover plate, 1 mm thick



gray	**284-336**	100 (4x25)
orange	**284-346**	100 (4x25)

281 Series Accessories

Appropriate marking systems: WMB/WFB
(see Section 13)

Insulation stop, 5 pcs/strip, 0.08 … 0.2 mm² "s"

❹ 

(0.14 mm² "f-st")		
white	**281-470**	200 (8x25)

Insulation stop, 5 pcs/strip, 0.25 … 0.5 mm²

❹ 

light gray	**281-471**	200 (8x25)

Insulation stop, 5 pcs/strip, 0.25 … 1.5 mm²

❹ 

dark gray	**281-472**	200 (8x25)

Overview of certification organizations, see page 654

0.08 ... 4 mm²	28 ... 12 AWG
800 V/8 kV/3 ❶	600 V, 20 A
I_N 32 A	600 V, 25 A

Terminal block width 6 mm / 0.236 inch
9 ... 10 mm / 0.35 ... 0.39 inch

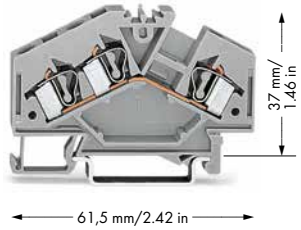

❶ 800 V = rated voltage
8 kV = rated surge voltage
3 = pollution degree
(see Section 14)

❷ Suitable for Ex i applications

❸ Suitable for Ex e II applications
0.2 ... 4 mm² / 24 ... 12 AWG
550 V, 30 A
(see Section 14)
Using staggered jumpers reduces the maximum rated voltage to 275 V.

❹ See application notes for:
Insulation stop, page 331
Staggered jumper, page 333
Push-in type wire jumper, page 333
Comb-style jumper bar, page 332
Operating tool, page 332
Step-down jumper, page 234
Test plug modules, page 326
Banana plug, page 330

5

	Item No.	Pack. Unit
3-conductor through terminal block		
gray	281-631	100
blue	281-651 ❷	100
light gray Ex	281-998 ❸	100
3-conductor ground terminal block		
green-yellow	281-637	100
green-yellow Ex	281-637/999-950 ❸	100

Item-Specific Accessories

End and intermediate plate, 2.5 mm thick



orange	281-313	100 (4x25)
gray	281-312	100 (4x25)
light gray	281-357	100 (4x25)

Separator, oversized, 2 mm thick



orange	281-318	100 (4x25)
gray	281-348	100 (4x25)
light gray	281-358	100 (4x25)

Separator for Ex e/Ex i applications, 3 mm thick, orange



120 mm	209-191	50 (2x25)

Protective warning marker, with black high-voltage symbol, for 5 terminal blocks



yellow	281-415	100 (4x25)

281 Series Accessories

Appropriate marking systems: WMB/WFB
(see Section 13)

Adjacent jumper, insulated, I_N = I_N terminal block



gray	281-402	200 (8x25)
yellow-green	281-422	200 (8x25)

Alternate jumper, insulated, I_N = I_N terminal block



gray	281-409	100 (4x25)

Staggered jumper, insulated, Spacing: 6 mm, I_N 32 A ❹



from 1 to 2	781-452	100 (4x25)
from 1 to 3	781-453	100 (4x25)
from 1 to 4	781-454	100 (4x25)
from 1 to 5	781-455	50 (2x25)
from 1 to 6	781-456	50 (2x25)

Push-in type wire jumper, insulated, wire size 0.75 mm², I_N 9 A ❹



L = 60 mm	249-125	10
L = 110 mm	249-126	10
L = 250 mm	249-127	10

Comb-style jumper bar, insulated, I_N = I_N terminal block ❹



2-way	281-482	100 (4x25)
3-way	281-483	100 (4x25)
5-way	281-485	100 (4x25)
10-way	281-490	50 (2x25)

Alternate comb-style jumper bar, insulated, I_N = I_N terminal block



2-way	281-492	100 (4x25)

Operating tool, of insulating material



2-way	280-432	1
3-way	280-433	1
5-way	281-440	1

Step-down jumper, insulated, commons 10/6 mm² (8/10 AWG) down to 4/2.5/1.5 mm² (12/14/16 AWG), I_N 15 A ❹



gray	284-414	50 (2x25)

Step-down jumper, insulated, commons 10/6 mm² (8/10 AWG) down to 6/4 mm² (10/12 AWG), I_N 30 A



gray	284-413	50 (2x25)

Step-down cover plate, 1 mm thick



gray	284-334	100 (4x25)
orange	284-344	100 (4x25)

Test plug module, snaps together, 6 mm wide ❹



gray	281-418	100 (4x25)

Spacer module, snaps together, 6 mm wide



gray	281-419	100 (4x25)

Test plug, with 500 mm cable, 2 mm Ø, max. 42 V



red	210-136	50

Test plug, with 500 mm cable, 2.3 mm Ø, max. 42 V



yellow	210-137	50

Test plug adapter, 5 mm wide, for 210-137 Test Plug (2.3 mm Ø), for 1.5 ... 4 mm² terminal blocks



gray	280-404	100 (4x25)

Test plug adapter, 8.3 mm wide, for 4 mm Ø test plug, for 1.5 ... 10 mm² terminal blocks



gray	209-170	50 (2x25)

Banana plug, for 4 mm socket diameter, color mixed, 10 x ❹ orange, white, black, blue, yellow



215-111	50

Test plug adapter, 6 mm wide, with CAGE CLAMP®, for 0.08 ... 2.5 mm²



I_N 24 A	281-407	100 (4x25)

Screwless end stop, for DIN-35 rail, 6 mm wide



gray	249-116	100 (4x25)

Screwless end stop, for DIN-35 rail, 10 mm wide



gray	249-117	50 (2x25)

Through/Ground Conductor and Ex Terminal Blocks

6 mm², 282 Series

0.2 … 6 mm²	24 … 10 AWG
800 V/8 kV/3 ❶	600 V, 30 A
I_N 41 A	600 V, 40 A
Terminal block width 8 mm / 0.315 inch	
12 … 13 mm / 0.47 … 0.51 inch	

0.2 … 6 mm²	24 … 10 AWG
800 V/8 kV/3 ❶	600 V, 30 A
I_N 41 A	600 V, 40 A
Terminal block width 8 mm / 0.315 inch	
12 … 13 mm / 0.47 … 0.51 inch	

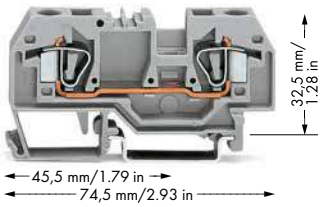

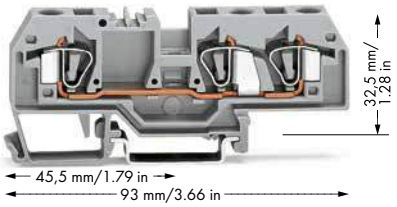

❶ 800 V = rated voltage
8 kV = rated surge voltage
3 = pollution degree
(see Section 14)

❷ Suitable for Ex i applications

❸ Suitable for Ex e II applications
0.5 … 6 mm² / 20 … 10 AWG
550 V, 39 A
35 A jumper
(see Section 14)

❹ See application notes for:
Step-down jumper, page 234
Test plug module, page 329
Banana plug, page 330

5

	Item No.	Pack. Unit
2-conductor through terminal block		
gray	**282-901**	50
blue	**282-904** ❷	50
orange	**282-902**	50
light gray Ex	**282-992** ❸	50
2-conductor ground terminal block		
green-yellow	**282-907**	50
green-yellow Ex	**282-907/999-950** ❸	50

	Item No.	Pack. Unit
3-conductor through terminal block		
gray	**282-681**	25
blue	**282-684** ❷	25
orange	**282-682**	25
light gray Ex	**282-993** ❸	50
3-conductor ground terminal block		
green-yellow	**282-687**	25
green-yellow Ex	**282-687/999-950** ❸	50

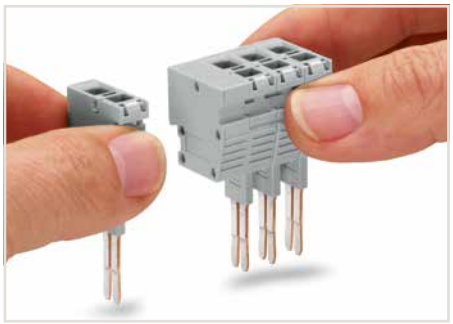

Snapping test plug and spacer modules together to assemble a multi-pole test plug module (max. 10 poles) for 8 mm terminal block width.

Item-Specific Accessories

		Item No.	Pack. Unit
End and intermediate plate, 2.5 mm thick			
	orange	**282-328**	100 (4x25)
	gray	**282-325**	100 (4x25)
	light gray	**282-330**	100 (4x25)
Separator, oversized, 2 mm thick			
	orange	**282-329**	100 (4x25)
	gray	**282-326**	100 (4x25)
	light gray	**282-331**	100 (4x25)
Step-down cover plate, 1 mm thick			
	gray	**282-357**	100 (4x25)
	orange	**282-367**	100 (4x25)

Item-Specific Accessories

		Item No.	Pack. Unit
End and intermediate plate, 2.5 mm thick			
	orange	**282-339**	100 (4x25)
	gray	**282-308**	100 (4x25)
	light gray	**282-341**	100 (4x25)
Separator, oversized, 2 mm thick			
	orange	**282-340**	100 (4x25)
	gray	**282-309**	100 (4x25)
	light gray	**282-342**	100 (4x25)
Step-down cover plate, 1 mm thick			
	gray	**282-358**	100 (4x25)
	orange	**282-368**	100 (4x25)

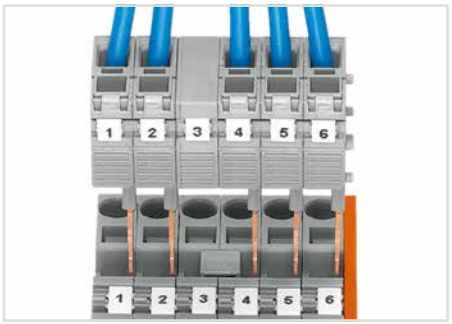

The test plug modules are directly plugged into the jumper contact slot of the current bar (picture shows 282 Series).

282 Series Accessories

Appropriate marking systems: WMB/WFB
(see Section 13)

		Item No.	Pack. Unit
Separator for Ex e/Ex i applications, 3 mm thick, orange			
	120 mm	**209-191**	50 (2x25)
Adjacent jumper, insulated, I_N 41 A			
	gray	**282-402**	100 (4x25)
	yellow-green	**282-422**	100 (4x25)
Alternate jumper, insulated, I_N 41 A			
	gray	**282-409**	100 (4x25)
Protective warning marker, with black high-voltage symbol, for 5 terminal blocks			
	yellow	**282-415**	100 (4x25)
❹ Step-down jumper, insulated, commons 10/6 mm² (8/10 AWG) down to 4/2.5/1.5 mm² (12/14/16 AWG), I_N 15 A			
	gray	**284-414**	50 (2x25)

		Item No.	Pack. Unit
Step-down jumper, insulated, commons 10/6 mm² (8/10 AWG) down to 6/4 mm² (10/12 AWG), I_N 30 A			
	gray	**284-413**	50 (2x25)
Test plug adapter, 8.3 mm wide, for 4 mm Ø test plug, for 1.5 … 10 mm² terminal blocks			
	gray	**209-170**	50 (2x25)
Banana plug, for 4 mm socket diameter, color mixed, 10 x			
❹ 	orange, white, black, blue, yellow	**215-111**	50
B-type test plug module, snaps together, 8 mm wide			
❹ 	gray	**709-310**	100 (4x25)
B-type spacer module, snaps together, 8 mm wide			
	gray	**709-311**	100 (4x25)

Through/Ground Conductor and Ex Terminal Blocks

10 mm², 284 Series

0.2 … 10 mm²	24 … 8 AWG
800 V/8 kV/3 ❶	600 V, 50 A
I_N 57 A	600 V, 54 A
Terminal block width 10 mm / 0.394 inch	
12 … 13 mm / 0.47 … 0.51 inch	

0.2 … 10 mm²	24 … 8 AWG
800 V/8 kV/3 ❶	600 V, 50 A
I_N 57 A	600 V, 54 A
Terminal block width 10 mm / 0.394 inch	
12 … 13 mm / 0.47 … 0.51 inch	

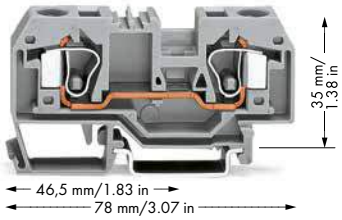

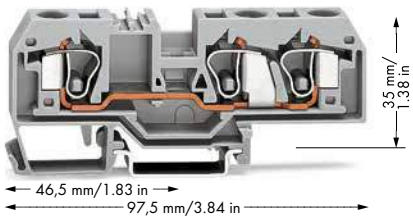

❶ 800 V = rated voltage
8 kV = rated surge voltage
3 = pollution degree
(see Section 14)

❷ Suitable for Ex e II applications
0.5 … 10 mm² / 20 … 8 AWG
550 V, 53 A
(see Section 14)

❸ See application notes for:
Step-down jumper, page 234
Test plug module, page 329
Banana plug, page 330

	Item No.	Pack. Unit
2-conductor through terminal block		
gray	**284-901**	25
blue	**284-904**	25
orange	**284-902**	25
light gray Ex	**284-992** ❷	25
2-conductor ground terminal block		
green-yellow	**284-907**	25
green-yellow Ex	**284-907/999-950** ❷	25

	Item No.	Pack. Unit
3-conductor through terminal block		
gray	**284-681**	25
blue	**284-684**	25
orange	**284-682**	25
light gray Ex	**284-993** ❷	25
3-conductor ground terminal block		
green-yellow	**284-687**	25
green-yellow Ex	**284-687/999-950** ❷	25

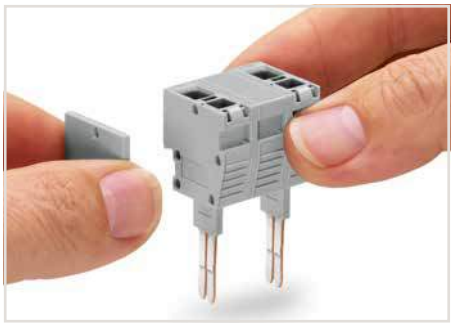

Snapping test plug and spacer modules (each with a spacer plate) together to assemble a multi-pole test plug module (max. 10 poles) for 10 mm terminal block width.

Item-Specific Accessories

		Item No.	Pack. Unit
End and intermediate plate, 2.5 mm thick			
	orange	**284-328**	100 (4x25)
	gray	**284-325**	100 (4x25)
	light gray	**284-330**	100 (4x25)
Separator, oversized, 2 mm thick			
	orange	**284-329**	100 (4x25)
	gray	**284-326**	100 (4x25)
	light gray	**284-331**	100 (4x25)
Step-down cover plate, 1 mm thick			
	gray	**284-357**	100 (4x25)
	orange	**284-367**	100 (4x25)

Item-Specific Accessories

		Item No.	Pack. Unit
End and intermediate plate, 2.5 mm thick			
	orange	**284-339**	100 (4x25)
	gray	**284-308**	100 (4x25)
	light gray	**284-341**	100 (4x25)
Separator, oversized, 2 mm thick			
	orange	**284-340**	100 (4x25)
	gray	**284-309**	100 (4x25)
	light gray	**284-342**	100 (4x25)
Step-down cover plate, 1 mm thick			
	gray	**284-358**	100 (4x25)
	orange	**284-368**	100 (4x25)



The test plug modules are directly plugged into the jumper contact slot of the current bar (picture shows 284 Series).

284 Series Accessories

Appropriate marking systems: WMB/WFB
(see Section 13)

		Item No.	Pack. Unit
Adjacent jumper, insulated, I_N 57 A			
	gray	**284-402**	100 (4x25)
	yellow-green	**284-422**	100 (4x25)
Alternate jumper, insulated, I_N 57 A			
	gray	**284-409**	50 (2x25)
Protective warning marker, with black high-voltage symbol, for 5 terminal blocks			
	yellow	**284-415**	50 (2x25)
Finger guard, touch-proof cover protects unused conductor entries			
	yellow	**284-400**	100 (4x25)
Step-down jumper, insulated, commons 10/6 mm² (8/10 AWG) down to 4/2.5/1.5 mm² (12/14/16 AWG), I_N 15 A ❸			
	gray	**284-414**	50 (2x25)

		Item No.	Pack. Unit
Step-down jumper, insulated, commons 10/6 mm² (8/10 AWG) down to 6/4 mm² (10/12 AWG), I_N 30 A			
	gray	**284-413**	50 (2x25)
Test plug adapter, 8.3 mm wide, for 4 mm Ø test plug, for 1.5 … 10 mm² terminal blocks			
	gray	**209-170**	50 (2x25)
Banana plug, for 4 mm socket diameter, color mixed, 10 x ❸	orange, white, black, blue, yellow	**215-111**	50
B-type test plug module, snaps together, 8 mm wide ❸			
	gray	**709-310**	100 (4x25)
B-type spacer plate, snaps together, 2 mm wide			
	gray	**709-312**	100 (4x25)



Inserting a finger guard seals unused conductor entries.

Through/Ground Conductor and Ex Terminal Blocks

16 mm², 283 Series

0.2 ... 16 mm²	24 ... 6 AWG
800 V/8 kV/3 ❶	600 V, 65 A
I_N 76 A	600 V, 70 A

Terminal block width 12 mm / 0.472 inch
16 ... 17 mm / 0.63 ... 0.67 inch

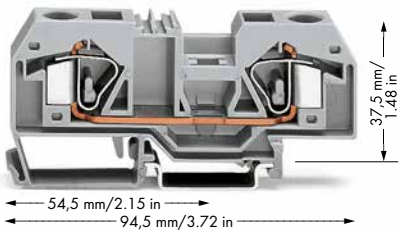

❶ 800 V = rated voltage
8 kV = rated surge voltage
3 = pollution degree
(see Section 14)

❷ Suitable for Ex e II applications
0.5 ... 16 mm² / 20 ... 6 AWG
550 V, 68 A
63 A jumper
(see Section 14)

❸ See application notes for:
Step-down jumper, page 234
Banana plug, page 330

5

	Item No.	Pack. Unit
2-conductor through terminal block		
gray	283-901	20
blue	283-904	20
orange	283-902	20
light gray Ex	283-992 ❷	20
2-conductor ground terminal block		
green-yellow	283-907	20
green-yellow Ex	283-907/999-950 ❷	20

283 Series Accessories

Appropriate marking systems (see Section 13)

End and intermediate plate, 2.5 mm thick			
	orange	283-328	50 (2x25)
	gray	283-325	50 (2x25)
	light gray	283-330	50 (2x25)
Separator, oversized, 2 mm thick			
	orange	283-329	50 (2x25)
	gray	283-326	50 (2x25)
	light gray	283-331	50 (2x25)
Adjacent jumper, insulated, I_N 70 A			
	gray	283-402	50 (2x25)
	yellow-green	283-422	50 (2x25)
Alternate jumper, insulated, I_N 76 A			
	gray	283-409	50 (2x25)
Protective warning marker, with black high-voltage symbol, for 5 terminal blocks			
	yellow	283-415	50 (2x25)
Finger guard, touch-proof cover protects unused conductor entries			
	yellow	283-400	100 (4x25)
Step-down jumper, insulated, commons 16 mm² (6 AWG) ❸			
	down to 4 mm² (12 AWG), I_N 32 A		
	gray	283-414	50 (2x25)
Step-down cover plate, 1 mm thick			
	gray	283-357	100 (4x25)
	orange	283-367	100 (4x25)
Test plug adapter, 11.6 mm wide, for 4 mm Ø test plug, for 1.5 ... 16 mm² terminal blocks			
	gray	283-404	25
Banana plug, for 4 mm socket diameter, color mixed, 10 x ❸			
	orange, white, black, blue, yellow		
		215-111	50
Power tap, I_N 24 A, with 500 mm cable, for terminal blocks			
	16 mm² (283/783 Series) and 35 mm² (285/785 Series)		
	gray	283-407	25
Screwless end stop, for DIN-35 rail, 6 mm wide			
	gray	249-116	100 (4x25)

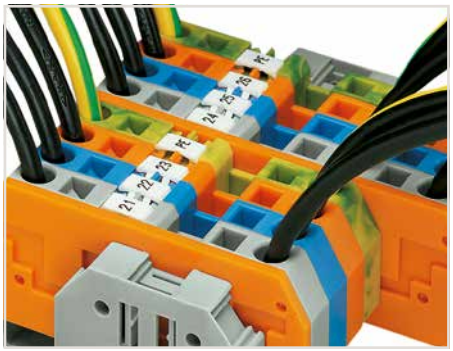

The markers are not covered by the wiring when marking terminal blocks in center position.



Always push power tap (283-407) down into the terminal block until fully inserted!

Through/Ground Conductor and Ex Terminal Blocks

16 mm², 283 Series

0.2 … 16 mm²	24 … 6 AWG
800 V/8 kV/3 ❶	600 V, 65 A
I_N 76 A	600 V, 70 A

Terminal block width 12 mm / 0.472 inch
16 … 17 mm / 0.63 … 0.67 inch

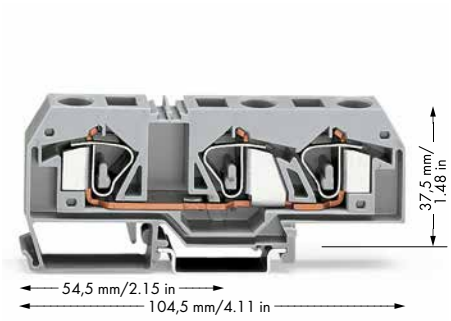

❶ 800 V = rated voltage
8 kV = rated surge voltage
3 = pollution degree
(see Section 14)

❸ Suitable for Ex e II applications
0.5 … 16 mm² / 20 … 6 AWG
550 V, 68 A
(see Section 14)

	Item No.	Pack. Unit
3-conductor through terminal block		
gray	**283-671**	20
blue	**283-674**	20
orange	**283-672**	20
light gray	**283-998** ❷	20
3-conductor ground terminal block		
green-yellow	**283-677**	20
green-yellow	**283-677/999-950** ❷	20

Notice: These terminal blocks cannot be commoned using adjacent jumpers

283 Series Accessories

Appropriate marking systems (see Section 13)

		Item No.	Pack. Unit
End and intermediate plate, 2.5 mm thick			
	orange	**283-352**	50 (2x25)
	gray	**283-350**	50 (2x25)
	light gray	**283-354**	50 (2x25)
Separator, oversized, 2 mm thick			
	orange	**283-353**	50 (2x25)
	gray	**283-351**	50 (2x25)
	light gray	**283-355**	50 (2x25)
Protective warning marker, with black high-voltage symbol, for 5 terminal blocks			
	yellow	**283-415**	50 (2x25)
Finger guard, touch-proof cover protects unused conductor entries			
	yellow	**283-400**	100 (4x25)
Screwless end stop, for DIN-35 rail, 6 mm wide			
	gray	**249-116**	100 (4x25)
Screwless end stop, for DIN-35 rail, 10 mm wide			
	gray	**249-117**	50 (2x25)



Inserting a finger guard seals unused conductor entries.

5

Through/Ground Conductor and Ex Terminal Blocks

35 mm², 285 Series

6 … 35 mm²	**8 … 2 AWG**
1000 V/8 kV/3 ❶	**600 V, 115 A**
I_N 125 A	**600 V, 120 A**

Terminal block width 16 mm / 0.63 inch
23 mm / 0.91 inch

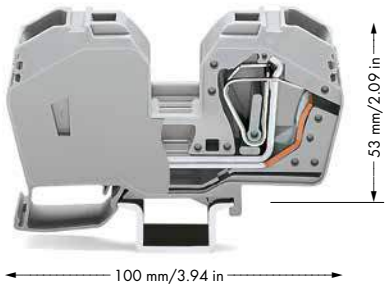


Terminating a 35 mm² (2 AWG) conductor.

❶ 1000 V = rated voltage
8 kV = rated surge voltage
3 = pollution degree
(see Section 14)

❷ Suitable for Ex e II applications
6 … 35 mm² / 8 … 2 AWG
880 V, 85 A
6 … 25 mm² / 8 … 4 AWG
for ground conductor terminal blocks
(see Section 14)

5

	Item No.	Pack. Unit
2-conductor through terminal block, with integrated end plate, sively on DIN-35 x 15 rail		
gray	**285-635**	15
blue	**285-634**	15
light gray	**285-992** ❷	15
2-conductor ground terminal block, with integrated end plate, sively on DIN-35 x 15 rail		
green-yellow	**285-637**	15
green-yellow	**285-637/999-950** ❷	15


Protective warning markers inserted into the operating slots.

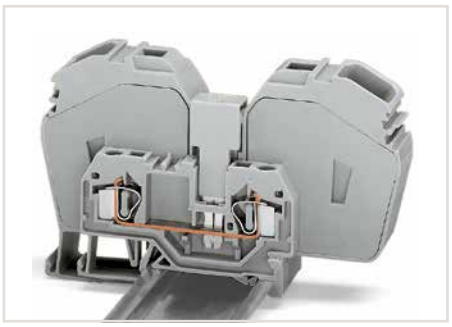
Commoning with step-down jumper (283-414) from 285 Series (35 mm²/2 AWG) to 281 Series terminal blocks (4 mm²/12 AWG).

285 Series Accessories

Appropriate marking systems:
WMB/Mini-WSB/WFB

Adjacent jumper, insulated, I_N 85 A			
	gray	**285-435**	50 (2x25)
Step-down jumper, insulated, commons 16 mm² (6 AWG) down to 4 mm² (12 AWG), I_N 32 A			
	gray	**283-414**	50 (2x25)
Protective warning marker, with black high-voltage symbol, for 5 terminal blocks			
	yellow	**285-416**	50 (2x25)
Finger guard, touch-proof cover protects unused conductor entries			
	yellow	**285-401**	100
Power tap, I_N 24 A, with 500 mm cable, for terminal blocks 16 mm² (283/783 Series) and 35 mm² (285/785 Series)			
	gray	**283-407**	25
Screwless end stop, for DIN-35 rail, 6 mm wide			
	gray	**249-116**	100 (4x25)
Screwless end stop, for DIN-35 rail, 10 mm wide			
	gray	**249-117**	50 (2x25)


Finger guard seals an unused conductor entry.

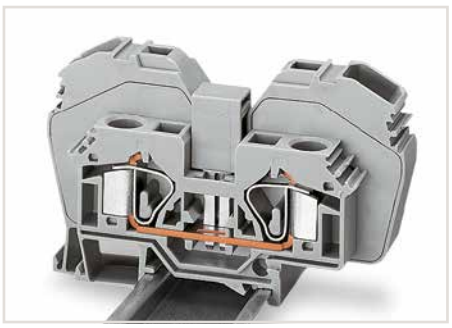
The following 285 Series Through Terminal Blocks can be commoned with 283 Series Through Terminal Blocks:
285-635 or 285-634 with 283-601 or 283-604 (terminal blocks with side marking,
visit www.wago.com)
Adjacent jumper required: 285-435

Please note that the nominal current of the adjacent jumper shall not exceed 63 A.

CAGE CLAMP®

Distribution Terminal Blocks, 3 x 10 mm² CAGE CLAMP® Connection and 1 x 35 mm² Screw Clamp Connection

284 Series

0.2 … 10 mm² ❶	24 … 8 AWG
6 … 35 mm² ❷	10 … 2 AWG

800 V/8 kV/3 ❸
I_N 125 A
Terminal block width 17.5 mm / 0.689 inch
12 … 14 mm / 0.47 … 0.55 inch

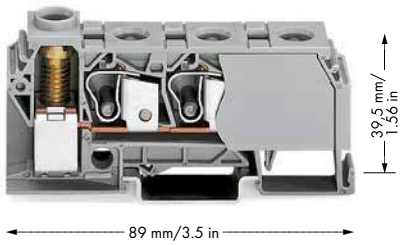



Terminating a 35 mm² (2 AWG) conductor – screw clamp connection, side-entry wiring.

❶ CAGE CLAMP® connection
❷ Screw-clamp connection
❸ 800 V = rated voltage
8 kV = rated surge voltage
3 = pollution degree
(see Section 14)
❹ Individual arrangement: 125 A
Two jumpers combined in one clamping unit: 100 A

	Item No.	Pack. Unit
Distribution terminal block, 3 x CAGE CLAMP® connection (10 mm²/8 AWG), 1 x screw-clamp connection (35 mm²/2 AWG) and 3.5 Nm screw torque		
gray	**284-621**	15
blue	**284-624**	15

Accessories for Distribution Terminal Blocks

Appropriate marking system: WMB

Comb-style jumper bar, insulated, ❹ I_N 125 A for 1 jumper, I_N 100 A for 2 jumpers			
	gray	**284-412**	100 (4x25)
Screwless end stop, for DIN-35 rail, 6 mm wide			
	gray	**249-116**	100 (4x25)
Screwless end stop, for DIN-35 rail, 10 mm wide			
	gray	**249-117**	50 (2x25)

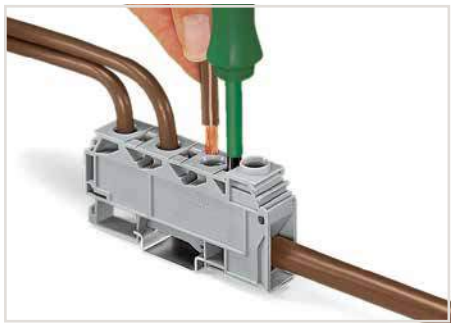

Terminating a 10 mm² (8 AWG) conductor – CAGE CLAMP® connection, front-entry wiring.

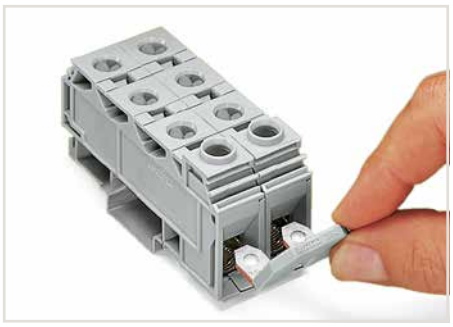

Commoning with comb-style jumper bar.
Individual arrangement: 125 A
Two jumpers combined in one clamping unit: 100 A

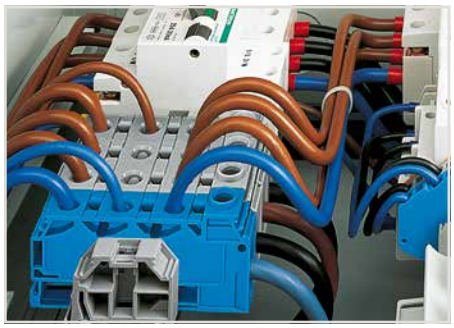

Side-entry distribution terminal block with screw clamp connection (35 mm²/2 AWG) and front-entry CAGE CLAMP® connection (3 x 10 mm²/8 AWG) snaps onto DIN-35 rails. This terminal block is enclosed on both sides and requires no end or intermediate plate.

When connecting 3 x 10 mm² (8 AWG) conductors on the distribution side, make sure that the nominal current of 125 A is not exceeded.

5

Step-Down Jumpers for Front-Entry Through Terminal Blocks up to 16 mm²

Installation



Step-down jumper from 10/6 mm² (8/10 AWG) to 4/2.5/1.5 mm² (12/14/16 AWG):
I_N 15 A, Item No. 284-414



Step-down jumper from 10/6 mm² (8/10 AWG) to 6/4 mm² (10/12 AWG):
I_N 30 A, Item No. 284-413



Step-down jumper from 16 mm² (6 AWG) to 4 mm² (12 AWG):
I_N 32 A, Item No. 283-414

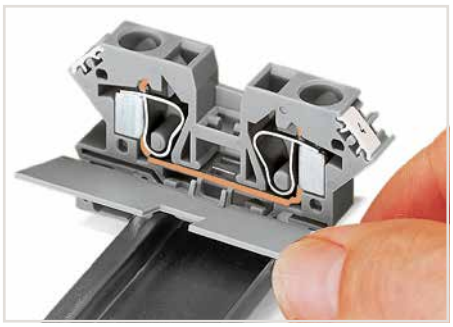

Snapping cover plate onto open side of terminal block.

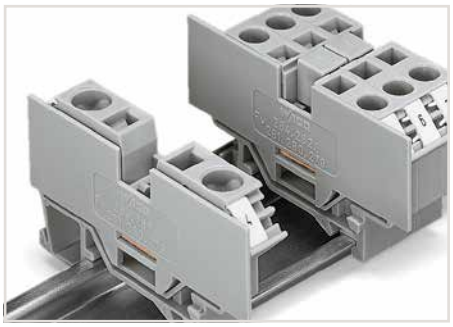

A cover plate must also be snapped onto the other side of the larger terminal block.



Commoning terminal blocks of different sizes – step down. Push down the step-down jumper until fully inserted.

Step-down jumpers common terminal blocks of different sizes, without losing a conductor clamping point. This can be beneficial on long conductor runs where voltage drop can be a problem. A large conductor can be easily connected to smaller conductors at the distribution point.

Step-down jumpers are simply pushed down for full insertion, similar to adjacent jumpers. Commoning may be made in either direction using the special thin end plate to cover the open side. Additional through terminal blocks having a smaller cross-section may be commoned using adjacent jumpers.
In this case, pay attention that:

- The total current of the outgoing circuits does not exceed the nominal current of the step-down jumper.
- The standard or special thin cover plate is installed on the open side of the larger block.

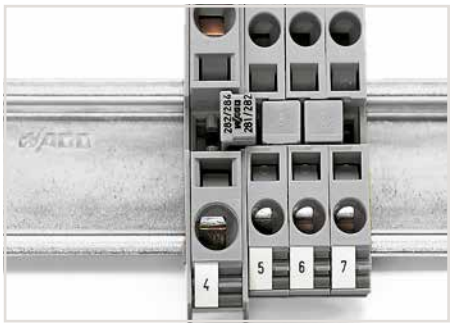

Note: Jumpers are marked with suitable terminal block sizes for correct installation.

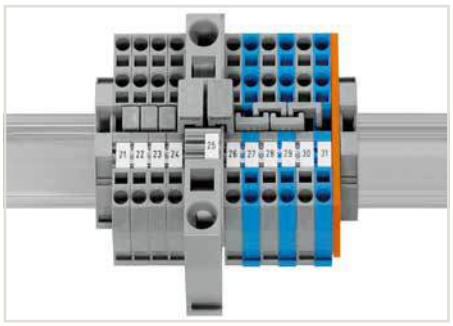

Commoning from 16 mm²/6 AWG (283 Series) to 4 mm²/12 AWG (281 Series) rail-mount terminal blocks via step-down jumpers.

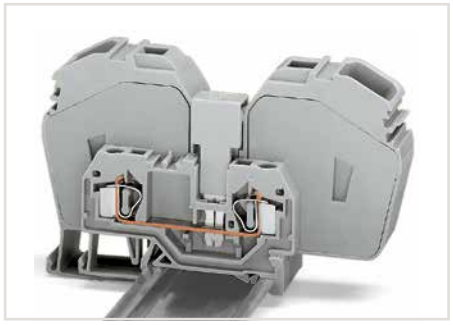

Commoning with step-down jumper (283-414) from 285 Series (35 mm²/2 AWG) to 281 Series terminal blocks (4 mm²/12 AWG).

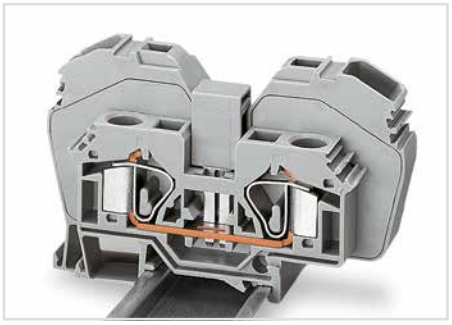

The following 285 Series Through Terminal Blocks can be commoned with 283 Series Through Terminal Blocks:
285-635 or 285-634 with 283-601 or 283-604 (terminal blocks with side marking,
visit www.wago.com)
Adjacent jumper required: 285-435

Please note that the nominal current of the adjacent jumper shall not exceed 63 A.

Assembly Examples
Step-Down Jumpers for Front-Entry Through Terminal Blocks
Terminal blocks with side marking, visit www.wago.com

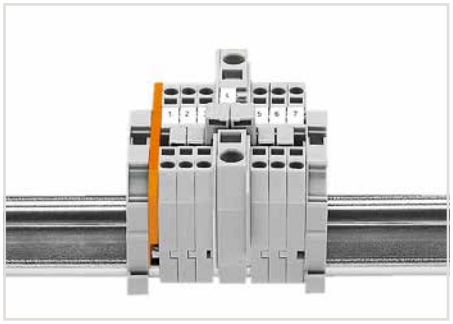

Commoning from 6 mm²/10 AWG (282 Series) to 1.5 mm²/16 AWG (279 Series) rail-mount terminal blocks via step-down jumpers.

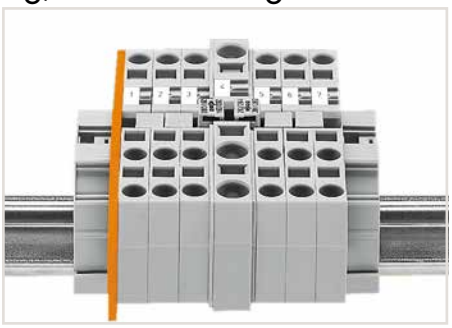

Commoning from 10 mm²/8 AWG (284 Series) to 6 mm²/10 AWG (282 Series) rail-mount terminal blocks via step-down jumpers.

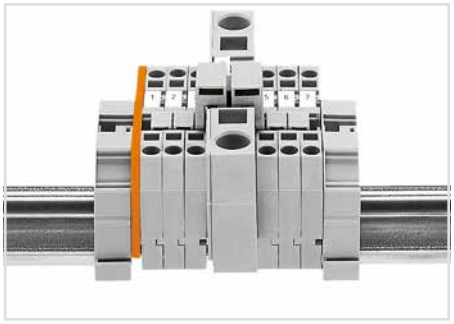

Commoning from 16 mm²/6 AWG (283 Series) to 4 mm²/12 AWG (281 Series) rail-mount terminal blocks via step-down jumpers.

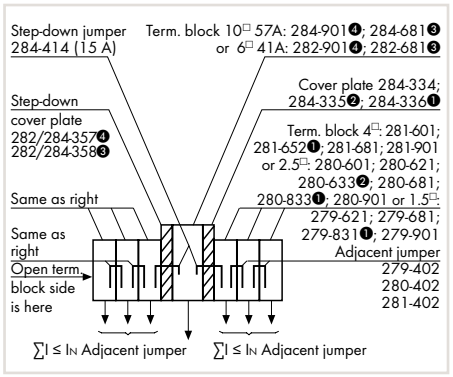

Assembly example: Commoning from 10/6 mm² (8/10 AWG) to 4/2.5/1.5 mm² (12/14/16 AWG) rail-mount terminal blocks via step-down jumper (284-414).

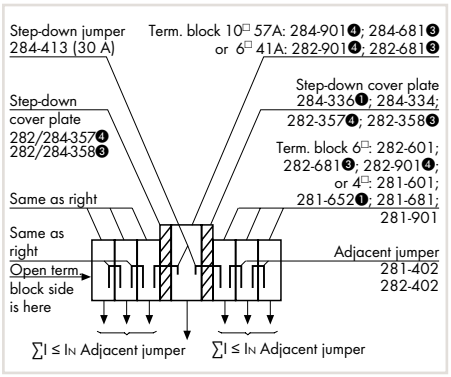

Assembly example: Commoning from 10/6 mm² (8/10 AWG) to 6 mm² (10 AWG) rail-mount terminal blocks via step-down jumper (284-413).

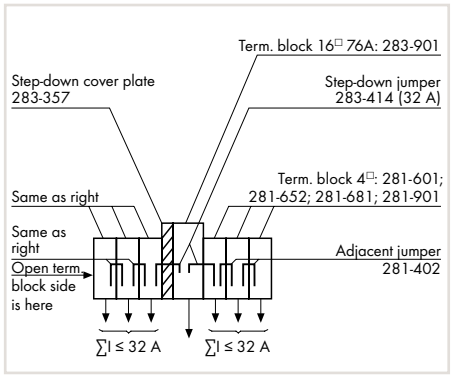

Assembly example: Commoning from 16 mm²/6 AWG to 4 mm²/12 AWG rail-mount terminal blocks via step-down jumper (283-414).



Commoning from 6 mm²/10 AWG (282 Series) to 1.5 mm²/16 AWG (279 Series) rail-mount terminal blocks via step-down jumpers.



Commoning from 10 mm²/8 AWG (284 Series) to 6 mm²/10 AWG (282 Series) rail-mount terminal blocks via step-down jumpers.

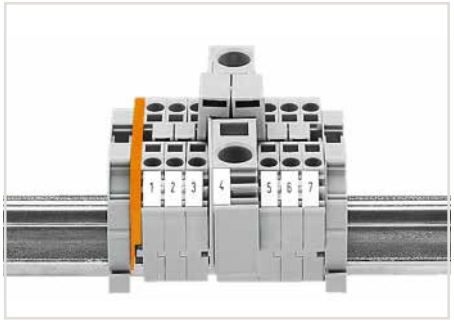

Commoning from 16 mm²/6 AWG (283 Series) to 4 mm²/12 AWG (281 Series) rail-mount terminal blocks via step-down jumpers.

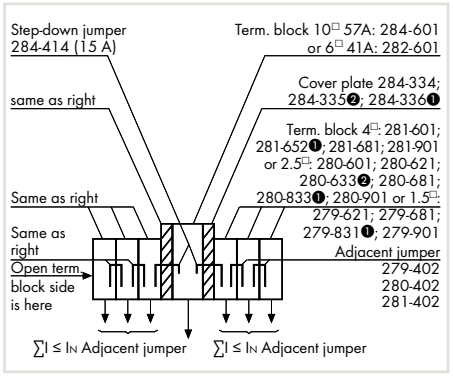

Assembly example: Commoning from 10/6 mm² (8/10 AWG) to 4/2.5/1.5 mm² (12/14/16 AWG) rail-mount terminal blocks via step-down jumper (284-414).

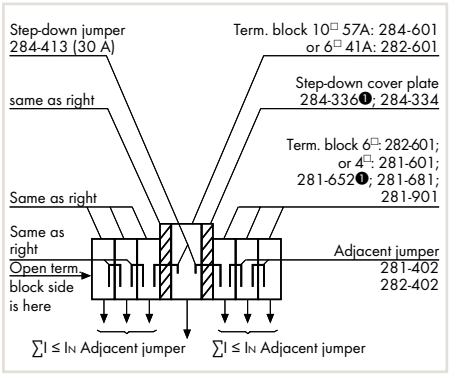

Assembly example: Commoning from 10/6 mm² (8/10 AWG) to 6 mm² (10 AWG) rail-mount terminal blocks via step-down jumper (284-413).

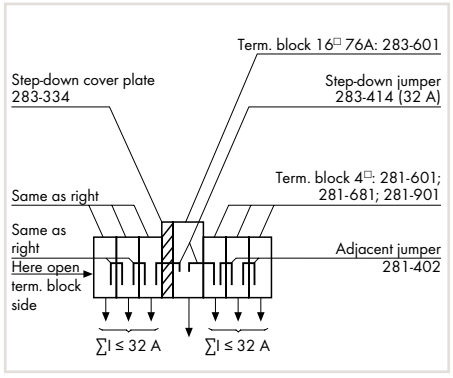

Assembly example: Commoning from 16 mm²/6 AWG to 4 mm²/12 AWG rail-mount terminal blocks via step-down jumper (283-414).

Double-Deck Terminal Blocks

1.5 mm², 279 Series

0.08 … 1.5 mm² | 28 … 16 AWG 500 V/6 kV/3 ❶ | 300 V, 10 A I_N 18 A Terminal block width 4 mm / 0.157 inch 8 … 9 mm / 0.31 … 0.35 inch	0.08 … 1.5 mm² | 28 … 16 AWG 500 V/6 kV/3 ❶ | 300 V, 10 A I_N 18 A Terminal block width 4 mm / 0.157 inch 8 … 9 mm / 0.31 … 0.35 inch	0.08 … 1.5 mm² | 28 … 16 AWG 500 V/6 kV/3 ❶ I_N 18 A Terminal block width 4 mm / 0.157 inch 8 … 9 mm / 0.31 … 0.35 inch

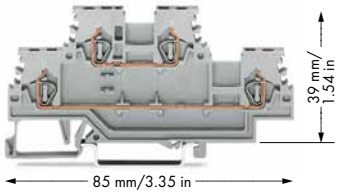

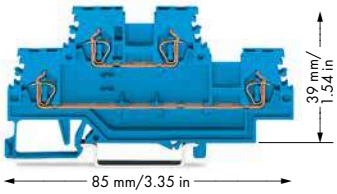

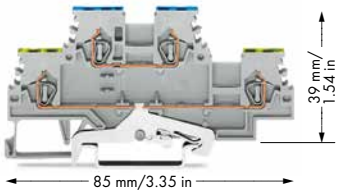

5

	Item No.	Pack. Unit
Double-deck terminal block, through/through terminal block, gray housing		
L/L	**279-501**	50
N/L	**279-512**	50
L/N	**279-513**	50

	Item No.	Pack. Unit
Double-deck terminal block, through/through terminal block, blue housing		
N/N	**279-504** ❷	50

	Item No.	Pack. Unit
Double-deck terminal block, ground conductor/through terminal block, gray housing		
PE/N	**279-517**	50
PE/L	**279-527**	50

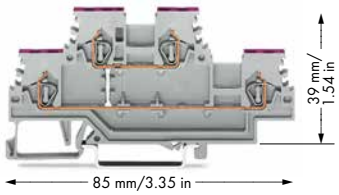

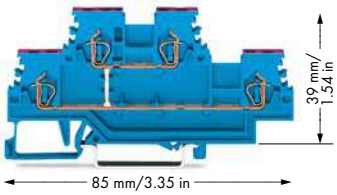

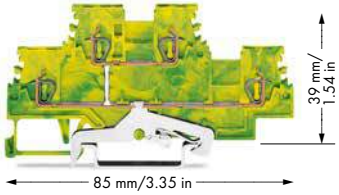

	Item No.	Pack. Unit
Double-deck terminal block, 4-conductor through terminal block, internally commoned, conductor entry position colored in violet, gray housing		
L	**279-508**	50

	Item No.	Pack. Unit
Double-deck terminal block, 4-conductor through terminal block, internally commoned, conductor entry position colored in violet, blue housing		
N	**279-509** ❷	50

	Item No.	Pack. Unit
Double-deck terminal block, 4-conductor ground terminal block, internally commoned, green-yellow housing		
PE	**279-507**	50

Overview of certification organizations, see page 654

Accessories
Double-Deck Terminal Blocks

❶ 500 V = rated voltage
6 kV = rated surge voltage
3 = pollution degree
(see Section 14)

❷ Suitable for Ex i applications

❸ See application notes for:
Insulation stop, page 331
Comb-style jumper bar, page 332
Operating tool, page 332

279 Series Accessories

Appropriate marking systems: WMB/WMB Inline
(see Section 13)

End and intermediate plate, 2 mm thick				
	orange	**279-519**	100 (4x25)	
	gray	**279-518**	100 (4x25)	
Insulation stop, 5 pcs/strip, 0.08 ... 0.2 mm² "s" ❷				
	(0.14 mm² "f-st")			
	white	**279-470**	200 (8x25)	
Insulation stop, 5 pcs/strip, 0.25 mm² ❷				
	dark gray	**279-471**	200 (8x25)	
Adjacent jumper, insulated, I_N 15 A				
	gray	**279-402**	200 (8x25)	
Alternate jumper, insulated, I_N 15 A				
	gray	**279-409**	100 (4x25)	
Double-deck marker carrier				
	gray	**279-529**	50 (2x25)	
Comb-style jumper bar, insulated, I_N = I_N terminal block ❸				
	2-way	**279-482**	200 (8x25)	
	3-way	**279-483**	200 (8x25)	
Comb-style jumper bar, insulated, I_N = I_N terminal block				
	10-way	**279-490**	50 (2x25)	
Alternate comb-style jumper bar, insulated, I_N = I_N terminal block				
	2-way	**279-492**	200 (8x25)	
Operating tool, of insulating material				
	2-way	**279-432**	1	
	3-way	**279-433**	1	
Operating tool, of insulating material				
	10-way	**279-440**	1	
WMB Inline, plain, 2,000 WMB markers (4 mm) per reel, 4 ... 4.2 mm stretchable				
	white	**2009-114**	1	

WMB Multi marking system, white, 10 strips with 10 markers per card, 4 ... 4.2 mm stretchable			
	plain	**793-4501**	5
WMB Multi marking system, plain, 10 strips with 10 markers per card, 4 ... 4.2 mm stretchable			
	yellow	**793-4501/000-002**	
	red	**793-4501/000-005**	
	blue	**793-4501/000-006**	
	gray	**793-4501/000-007**	
	orange	**793-4501/000-012**	
	light green	**793-4501/000-017**	
	green	**793-4501/000-023**	
	violet	**793-4501/000-024**	
			5

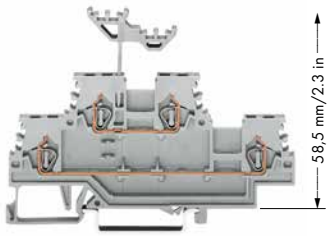

Double-deck marker carrier
(height including marker carrier)

Double- and Triple-Deck Terminal Blocks, 280 and 281 Series

Description and Installation

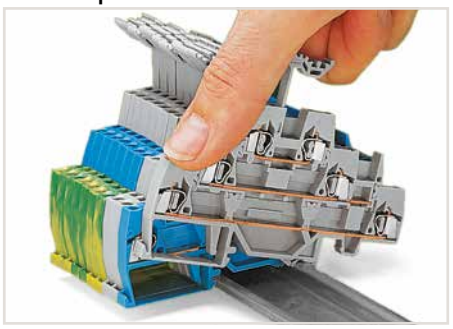

Snapping a terminal block onto the carrier rail.

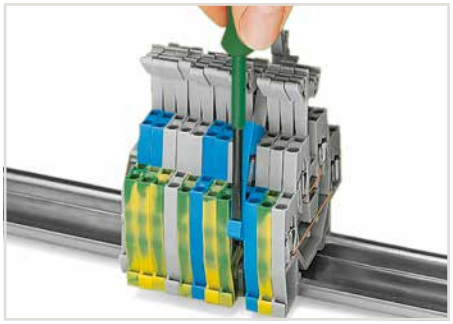

Removing a terminal block from the assembly.

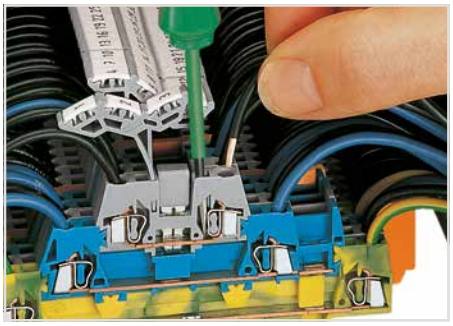

CAGE CLAMP® connection
Inserting a conductor.
When using ferrules, the max. conductor cross section accommodated is one size smaller than max. rating of terminal block.

5

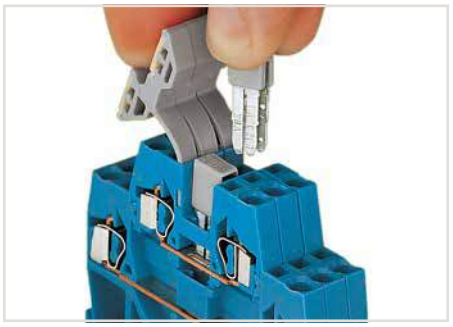

Commoning using an adjacent jumper (280-402).
Push jumper down until fully inserted.



Combining vertical and adjacent jumpers.

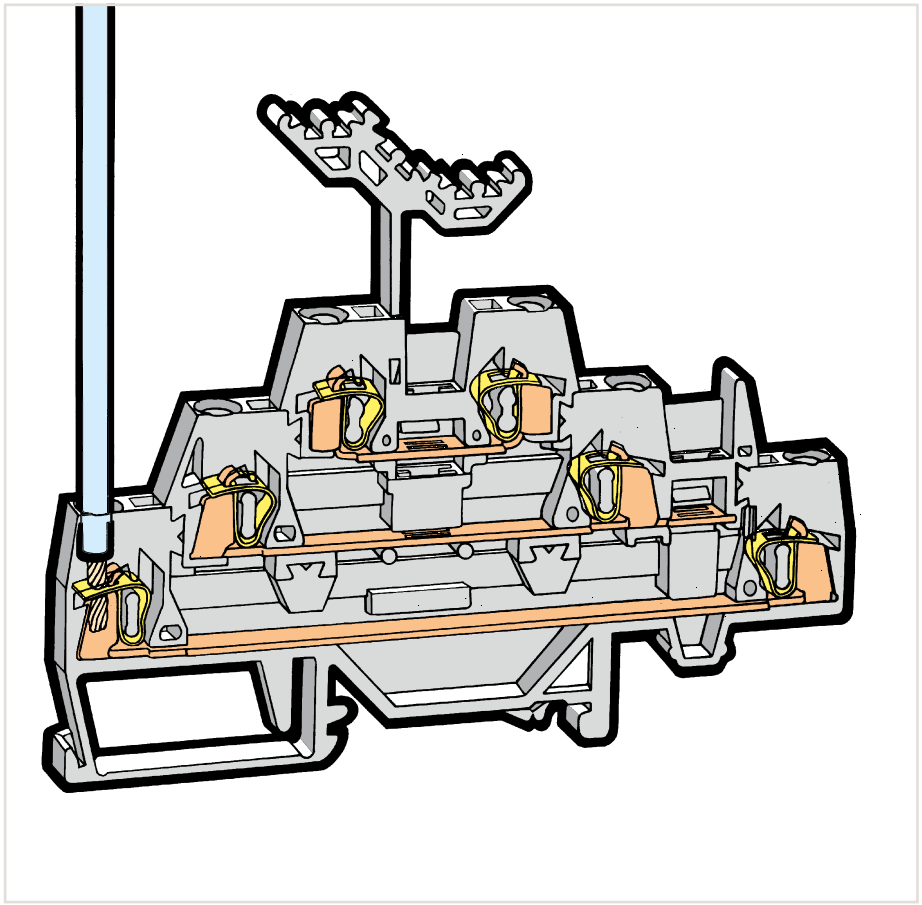



Labeling via WMB Multi Marking System.

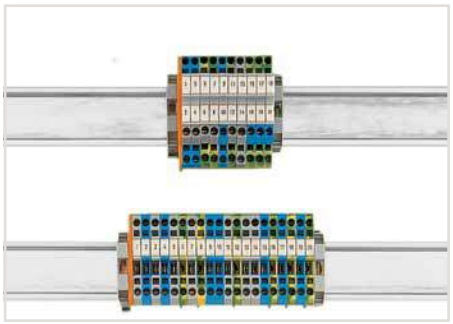

Save 50 % of rail space via double-deck terminal blocks.

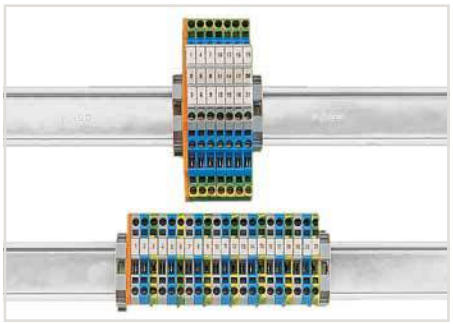

Save 67 % of rail space via triple-deck terminal blocks.



CAGE CLAMP® terminates the following copper conductors:
solid



stranded



fine-stranded, also with tinned single strands

For aluminum conductors, see notes in Section 14.

Double- and Triple-Deck Terminal Blocks, 280 and 281 Series

Installation

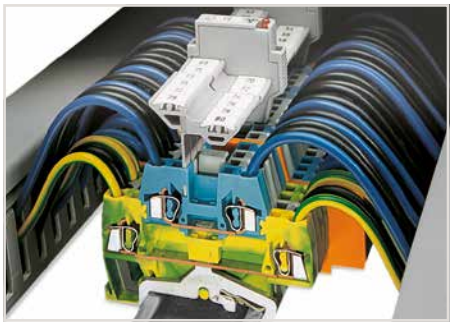

Example of a mixed assembly with double-deck terminal blocks.
The 280 Series Double-Deck Terminal Blocks are available with decks of same or different color according to their function. This is an additional visual aid during wiring, service or maintenance.

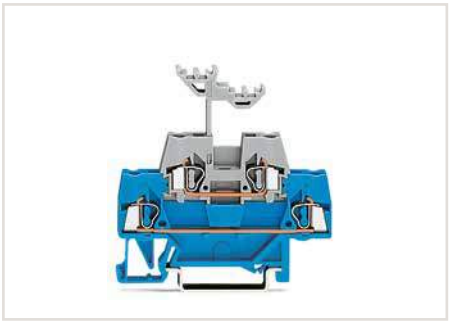

Double-deck terminal blocks accommodate two circuits of different potentials on two decks; different circuits can be differentiated by color coding either deck (280 Series).
The lower deck is wider than the upper for ease of wiring.

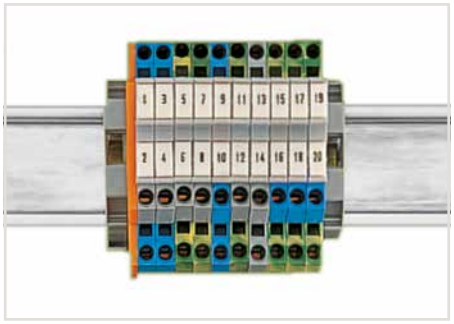

With a terminal block width of just 5 mm, an effective width of just 2.5 mm for terminal blocks of same or different potentials can be realized for conductors ranging 0.08 mm² ... 2.5 mm² (28 ... 14 AWG).

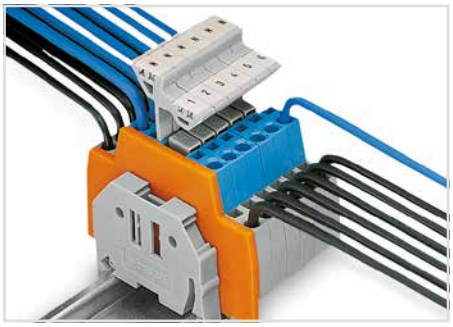

Double-deck terminal blocks used as control conductor terminal blocks (e.g., for magnetic valves) with the upper deck commoned.

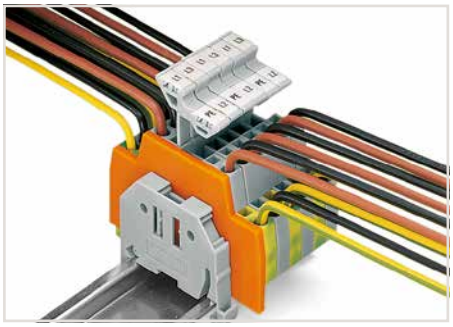

Double-deck terminal blocks used for connecting a three-phase motor.

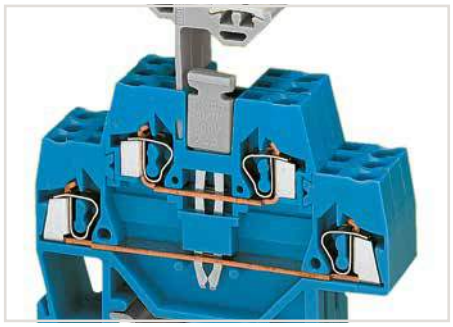

Commoning with a vertical jumper (281-421).
Push vertical jumper down until fully inserted.

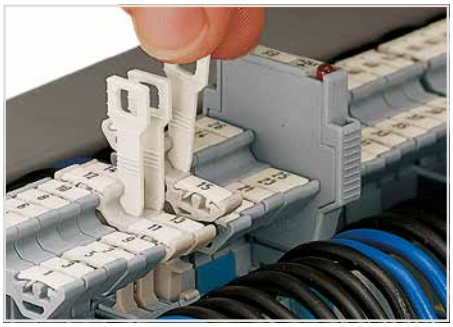

Pulling the disconnect tab.

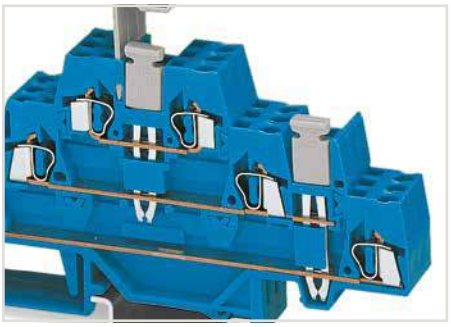

A vertical jumper allows commoning of the upper and lower levels, providing a 6-conductor feedthrough terminal block in one housing. Two adjacent triple-deck terminal blocks may be commoned together on the same level using a push-in adjacent jumper.

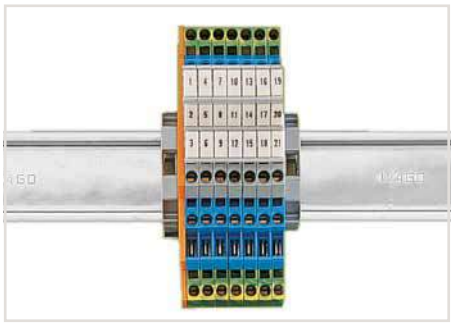

Double-deck (triple-deck) terminal blocks accommodate two (three) circuits of different potentials on two (three) decks; different circuits can be differentiated by color coding either deck (280 Series).
The lower deck is wider than the upper, for ease of wiring.



fine-stranded,
tip-bonded



fine-stranded,
with ferrule
(gastight crimped)



fine-stranded,
with pin terminal
(gastight crimped)

Double-Deck Terminal Blocks

2.5 mm², 280 Series

0.08 … 2.5 mm² / 500 V/6 kV/3 ❶ / I_N 20 A	28 … 12 AWG* / 300 V, 15 A / 300 V, 20 A	Terminal block width 5 mm / 0.197 inch; 8 … 9 mm / 0.31 … 0.35 inch
0.08 … 2.5 mm² / 500 V/6 kV/3 ❶ / I_N 20 A	28 … 12 AWG* / 300 V, 15 A / 300 V, 20 A	Terminal block width 5 mm / 0.197 inch; 8 … 9 mm / 0.31 … 0.35 inch
0.08 … 2.5 mm² / 500 V/6 kV/3 ❶ / I_N 20 A	28 … 12 AWG* / 300 V, 20 A	Terminal block width 5 mm / 0.197 inch; 8 … 9 mm / 0.31 … 0.35 inch

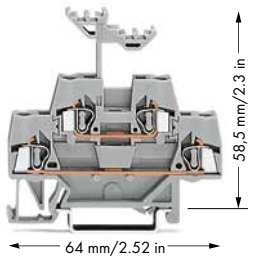

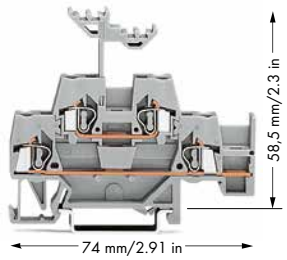

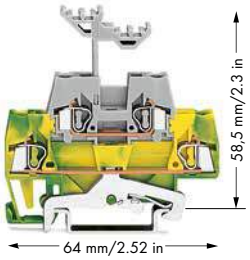

5

Item No.		Pack. Unit
Double-deck terminal block, through/through terminal block		
gray	**280-519**	50
blue	**280-529** ❷	50
Other terminal blocks with the same profile:		
Diode	**280-940/281-410**	Page 318
LED	**280-943/281-434**	Page 318

Item-Specific Accessories

End and intermediate plate, 2.5 mm thick

orange	**280-341**	100 (4x25)
gray	**280-340**	100 (4x25)

Intermediate plate, 1.1 mm thick

orange	**280-366**	100 (4x25)

Item No.		Pack. Unit
Double-deck terminal block, through/through terminal block, with horizontal jumpering on lower level		
gray	**280-520**	50
blue	**280-530** ❷	50

Item-Specific Accessories

End and intermediate plate, 2.5 mm thick

orange	**280-343**	100 (4x25)
gray	**280-342**	100 (4x25)

Intermediate plate, 1.1 mm thick

orange	**280-369**	100 (4x25)

Item No.		Pack. Unit
Double-deck terminal block, ground conductor/through terminal block		
green-yellow/gray	**280-527**	50
green-yellow/blue	**280-537**	50

Item-Specific Accessories

End and intermediate plate, 2.5 mm thick

orange	**280-341**	100 (4x25)
gray	**280-340**	100 (4x25)

Intermediate plate, 1.1 mm thick

orange	**280-366**	100 (4x25)

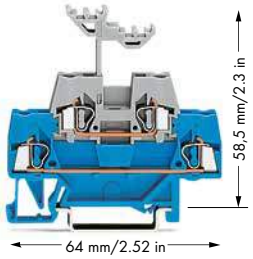

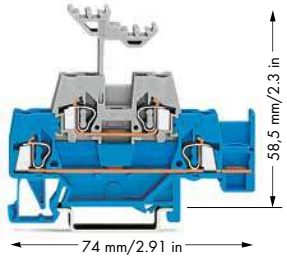

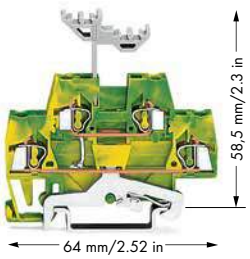

Item No.		Pack. Unit
Double-deck terminal block, through/through terminal block		
blue/gray	**280-523**	50
gray/blue	**280-533**	50

Item-Specific Accessories

End and intermediate plate, 2.5 mm thick

orange	**280-341**	100 (4x25)
gray	**280-340**	100 (4x25)

Intermediate plate, 1.1 mm thick

orange	**280-366**	100 (4x25)

Item No.		Pack. Unit
Double-deck terminal block, through/through terminal block, with horizontal jumpering on lower level		
blue/gray	**280-524**	50
gray/blue	**280-534**	50

Item-Specific Accessories

End and intermediate plate, 2.5 mm thick

orange	**280-343**	100 (4x25)
gray	**280-342**	100 (4x25)

Intermediate plate, 1.1 mm thick

orange	**280-369**	100 (4x25)

Item No.		Pack. Unit
Double-deck terminal block, 4-conductor ground terminal block, internally commoned		
green-yellow	**280-517**	50

Item-Specific Accessories

End and intermediate plate, 2.5 mm thick

orange	**280-341**	100 (4x25)
gray	**280-340**	100 (4x25)

Intermediate plate, 1.1 mm thick

orange	**280-366**	100 (4x25)

Overview of certification organizations, see page 654

0.08 ... 2.5 mm²	28 ... 12 AWG*
400 V/6 kV/3 ❶	300 V, 15 A
I_N 10 A	300 V, 20 A

Terminal block width 5 mm / 0.197 inch
8 ... 9 mm / 0.31 ... 0.35 inch

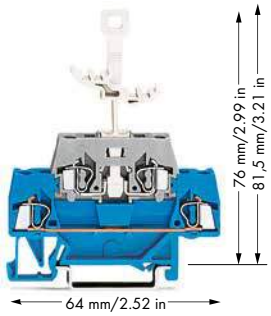

0.08 ... 2.5 mm²	28 ... 12 AWG*
500 V/6 kV/3 ❶	300 V, 15 A
I_N 20 A	300 V, 20 A

Terminal block width 5 mm / 0.197 inch
8 ... 9 mm / 0.31 ... 0.35 inch

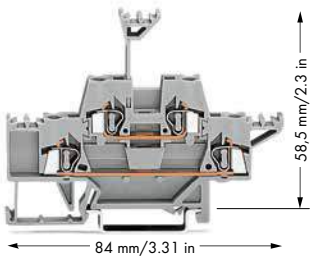

* 12 AWG: THHN, THWN

❶ 500 V/400 V = rated voltage
6 kV = rated surge voltage
3 = pollution degree
(see Section 14)

❷ Suitable for Ex i applications

❸ See application notes for:
Insulation stop, page 331
Comb-style jumper bar, page 332
Operating tool, page 332

5

	Item No.	Pack. Unit
Double-deck terminal block, through/disconnect terminal block		
blue/gray	**280-525**	50
gray/gray	**280-521**	50

Item-Specific Accessories

End and intermediate plate, 2.5 mm thick

orange	**280-341**	100 (4x25)
gray	**280-340**	100 (4x25)

Intermediate plate, 1.1 mm thick

orange	**280-366**	100 (4x25)

	Item No.	Pack. Unit
Double-deck terminal block, through/through terminal block, with additional marking options on both sides on both terminal block sides		
gray	**280-513**	50

Item-Specific Accessories

End and intermediate plate, 2.5 mm thick

orange	**280-341**	100 (4x25)
gray	**280-340**	100 (4x25)

Intermediate plate, 1.1 mm thick

orange	**280-366**	100 (4x25)

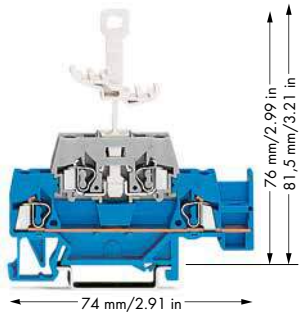

	Item No.	Pack. Unit
Double-deck terminal block, through/disconnect terminal block, with horizontal jumpering on lower level		
blue/gray	**280-526**	50
gray/gray	**280-522**	50

Item-Specific Accessories

End and intermediate plate, 2.5 mm thick

orange	**280-343**	100 (4x25)
gray	**280-342**	100 (4x25)

Intermediate plate, 1.1 mm thick

orange	**280-369**	100 (4x25)

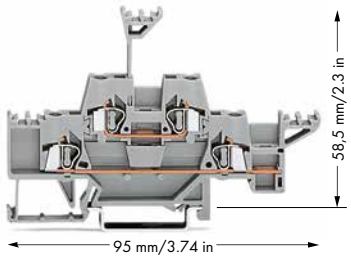

	Item No.	Pack. Unit
Double-deck terminal block, through/through terminal block, with additional marking options on both sides on both terminal block sides, with horizontal jumpering on lower level		
gray	**280-543**	50

Item-Specific Accessories

End and intermediate plate, 2.5 mm thick

orange	**280-343**	100 (4x25)
gray	**280-342**	100 (4x25)

Intermediate plate, 1.1 mm thick

orange	**280-369**	100 (4x25)

280 Series Accessories

Appropriate marking systems (see Section 13)

Insulation stop, 5 pcs/strip, 0.08 ... 0.2 mm² "s" ❸



(0.14 mm² "f-st")			
white	**280-470**	200 (8x25)

Insulation stop, 5 pcs/strip, 0.25 ... 0.5 mm² ❸



light gray	**280-471**	200 (8x25)

Insulation stop, 5 pcs/strip, 0.75 ... 1 mm² ❸



dark gray	**280-472**	200 (8x25)

Adjacent jumper, insulated, I_N = I_N terminal block



gray	**280-402**	200 (8x25)
yellow-green	**280-422**	200 (8x25)

Alternate jumper, insulated, I_N = I_N terminal block



gray	**280-409**	100 (4x25)

Vertical jumper, insulated, I_N 24 A



gray	**281-421**	200 (8x25)

Comb-style jumper bar, insulated, I_N = I_N terminal block ❸



2-way	**280-482**	200 (8x25)
3-way	**280-483**	200 (8x25)

Comb-style jumper bar, insulated, I_N = I_N terminal block



10-way	**280-490**	50 (2x25)

Alternate comb-style jumper bar, insulated, I_N = I_N terminal block



2-way	**280-492**	200 (8x25)

Operating tool, of insulating material



2-way	**280-432**	1
3-way	**280-433**	1

Operating tool, of insulating material



10-way	**280-440**	1

Screwless end stop, for DIN-35 rail, 6 mm wide



gray	**249-116**	100 (4x25)

Double- and Triple-Deck Carrier Terminal Blocks for Fuse Plugs

2.5 mm², 280 Series

0.08 ... 2.5 mm² / 400 V/6 kV/3 ❶ ❷ / I_N 10 A (20 A)	28 ... 12 AWG* / 300 V, 15 A / 300 V, 20 A	Terminal block width 5 mm / 0.197 inch; 8 ... 9 mm / 0.31 ... 0.35 inch
0.08 ... 2.5 mm² / 400 V/6 kV/3 ❶ ❷ / I_N 10 A (20 A)	28 ... 12 AWG* / 300 V, 15 A / 300 V, 20 A	Terminal block width 5 mm / 0.197 inch; 8 ... 9 mm / 0.31 ... 0.35 inch
0.08 ... 2.5 mm² / 400 V/6 kV/3 ❶ ❷ / I_N 10 A (10 A)	28 ... 12 AWG*	Terminal block width 5 mm / 0.197 inch; 8 ... 9 mm / 0.31 ... 0.35 inch

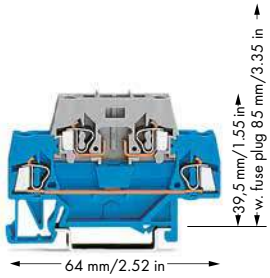

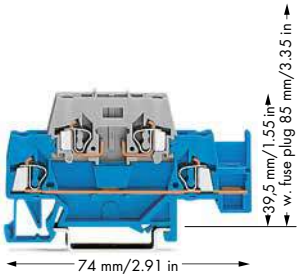

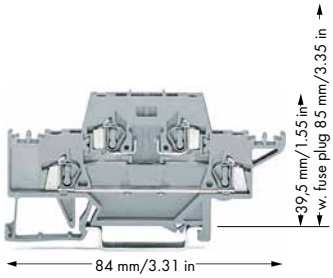

5

	Item No.	Pack. Unit
Double-deck terminal block, through/carrier terminal block for fuse plugs		
blue/gray	**280-531**	50
gray/gray	**280-514**	50

Item-Specific Accessories

End and intermediate plate, 2.5 mm thick			
orange	**280-341**	100 (4x25)	
gray	**280-340**	100 (4x25)	
Intermediate plate, 1.1 mm thick			
orange	**280-366**	100 (4x25)	

	Item No.	Pack. Unit
Double-deck terminal block, through/carrier terminal block for fuse plugs, with horizontal jumpering on lower level		
blue/gray	**280-532**	50
gray/gray	**280-891**	50

Item-Specific Accessories

End and intermediate plate, 2.5 mm thick		
orange	**280-343**	100 (4x25)
gray	**280-342**	100 (4x25)
Intermediate plate, 1.1 mm thick		
orange	**280-369**	100 (4x25)
Adjacent jumper, insulated, I_N = I_N terminal block		
gray	**280-402**	200 (8x25)
Alternate jumper, insulated, I_N = I_N terminal block		
gray	**280-409**	100 (4x25)

	Item No.	Pack. Unit
Double-deck terminal block, through/carrier terminal block for fuse plugs		
gray/gray	**280-528**	50

Item-Specific Accessories

End and intermediate plate, 2.5 mm thick		
orange	**280-341**	100 (4x25)
gray	**280-340**	100 (4x25)
Intermediate plate, 1.1 mm thick		
orange	**280-366**	100 (4x25)

Accessories

Appropriate marking system for fuse plugs
WSB Quick marking system

Insulation stop, 5 pcs/strip, 0.08 ... 0.2 mm² "s" (0.14 mm² "f-st") ❸		
white	**280-470**	200 (8x25)
Insulation stop, 5 pcs/strip, 0.25 ... 0.5 mm² ❸		
light gray	**280-471**	200 (8x25)
Insulation stop, 5 pcs/strip, 0.75 ... 1 mm² ❸		
dark gray	**280-472**	200 (8x25)
Fuse plug with pull-tab, 6 mm wide	**281-511**	50

Fuse plug with pull-tab, 6 mm wide	**281-512**	50
Fuse plug with pull-tab, 24 V AC/DC, with LED indicator, 6 mm wide	**281-512/281-501**	50
Comb-style jumper bar, insulated, I_N = I_N terminal block ❸		
2-way	**280-482**	200 (8x25)
3-way	**280-483**	200 (8x25)
Alternate comb-style jumper bar, insulated, I_N = I_N terminal block		
2-way	**280-492**	200 (8x25)

Operating tool, of insulating material		
2-way	**280-432**	1
3-way	**280-433**	1
WSB Quick marking system, for fuse plug (281-5..), white, 4 mm wide WSB markers		
F1, ..., F10 (10x)	**209-787**	5
F11, ..., F20 (10x)	**209-700/209-124**	
F21, ..., F30 (10x)	**209-700/209-125**	
F31, ..., F40 (10x)	**209-700/209-126**	
F41, ..., F50 (10x)	**209-700/209-127**	
		5

Overview of certification organizations, see page 654

0.08 ... 2.5 mm²	28 ... 12 AWG*
400 V/6 kV/3 ❶ ❷	300 V, 15 A
I_N 20 A (20 A)	600 V, 20 A

Terminal block width 5 mm / 0.197 inch
8 ... 9 mm / 0.31 ... 0.35 inch

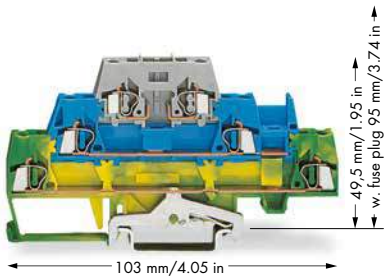

* 12 AWG: THHN, THWN

❶ 400 V = rated voltage
6 kV = rated surge voltage
3 = pollution degree
(see Section 14)

❷ Electrical ratings are given by the fuse or LED nominal voltage (see page 292).

❸ See application notes for:
Insulation stop, page 331
Comb-style jumper bar, page 332
Operating tool, page 332

5

	Item No.	Pack. Unit
Triple-deck terminal block, ground conductor/through/carrier terminal block for fuse plugs		
		50
green-yellow/blue/gray	**280-510**	
Triple-deck terminal block, through/through/carrier terminal block for fuse plugs		
gray/gray/gray	**280-889**	50

Item-Specific Accessories

End and intermediate plate, 2.5 mm thick			
	orange	**280-304**	50 (2x25)
	gray	**280-303**	50 (2x25)
Intermediate plate, 1.1 mm thick			
	orange	**280-336**	50 (2x25)
Adjacent jumper, insulated, I_N = I_N terminal block			
	gray	**280-402**	200 (8x25)
Alternate jumper, insulated, I_N = I_N terminal block			
	gray	**280-409**	100 (4x25)
Vertical jumper, insulated, I_N 24 A			
	gray	**281-421**	200 (8x25)
WSB Quick marking system, white, 10 strips with 10 markers per card, 4 mm wide WSB markers			
	plain	**209-701**	5
WSB Quick marking system, plain, 10 strips with 10 markers per card, 4 mm wide WSB markers			
	yellow	**209-701/000-002**	
	red	**209-701/000-005**	
	blue	**209-701/000-006**	
	gray	**209-701/000-007**	
	orange	**209-701/000-012**	
	light green	**209-701/000-017**	
	green	**209-701/000-023**	
	violet	**209-701/000-024**	
			5

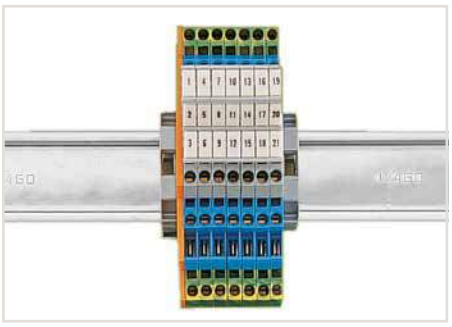

Double-deck (triple-deck) terminal blocks accommodate two (three) circuits of different potentials on two (three) decks; different circuits can be differentiated by color coding either deck (280 Series).
The lower deck is wider than the upper, for ease of wiring.

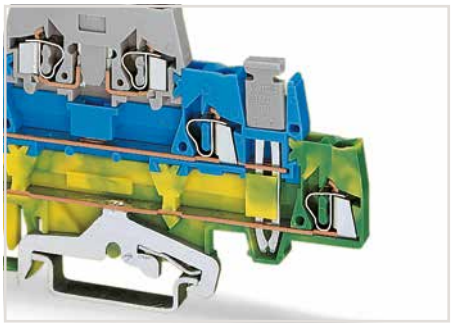

Grounding to carrier rail:
Connecting N-level to ground level via vertical jumper.

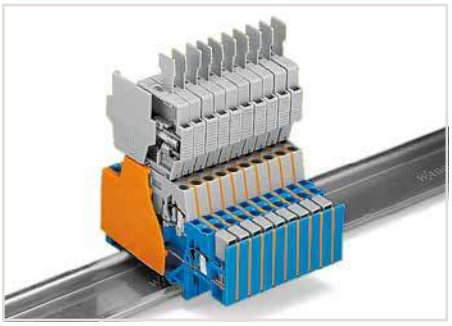

When double-deck terminal blocks are used with a fuse plug (6 mm wide) in the receptacle (top) level, the extra width can be compensated for the 280 Series (5 mm wide) via an intermediate plate (1.1 mm thick). If required, this special intermediate plate still allows commoning on the lower level via push-in adjacent jumpers (280-402).

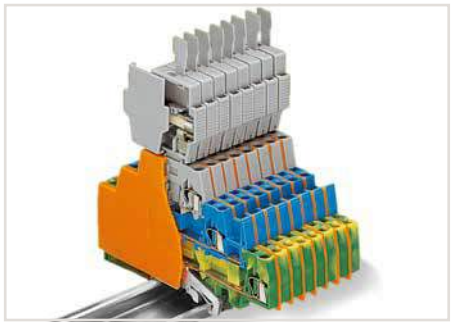

When triple-deck terminal blocks are used with a fuse plug (6 mm wide) in the receptacle (top) level, the extra width can be compensated for the 280 Series (5 mm wide) via an intermediate plate (1.1 mm thick).

Double-Deck Terminal Blocks

4 mm², 281 Series

0.08 ... 4 mm²	28 ... 12 AWG
500 V/6 kV/3 ❶	600 V, 20 A
I_N 26 A	600 V, 25 A
Terminal block width 6 mm / 0.236 inch	
9 ... 10 mm / 0.35 ... 0.39 inch	

0.08 ... 4 mm²	28 ... 12 AWG
500 V/6 kV/3 ❶	600 V, 20 A
I_N 26 A	600 V, 25 A
Terminal block width 6 mm / 0.236 inch	
9 ... 10 mm / 0.35 ... 0.39 inch	

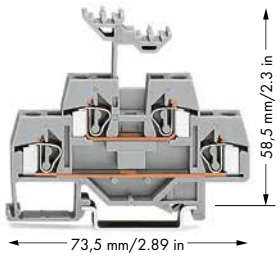

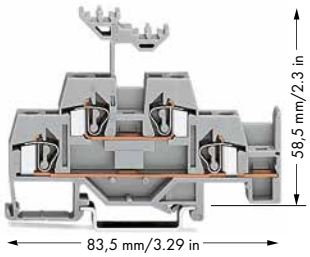

❶ 500 V = rated voltage
6 kV = rated surge voltage
3 = pollution degree
(see Section 14)

❷ Suitable for Ex i applications

❸ See application notes for:
Insulation stop, page 331
Comb-style jumper bar, page 332
Operating tool, page 332

5

	Item No.	Pack. Unit
Double-deck terminal block, through/through terminal block		
gray	281-619	50
blue	281-629 ❷	50
Other terminal blocks with the same profile:		
Diode	281-633/281-410	Page 320
LED	281-634/281-434	Page 320

	Item No.	Pack. Unit
Double-deck terminal block, through/through terminal block, with horizontal jumpering on lower level		
gray	281-620	50
blue	281-630 ❷	50

Item-Specific Accessories

	Item No.	Pack. Unit
End and intermediate plate, 2.5 mm thick		
orange	281-341	100 (4x25)
gray	281-340	100 (4x25)

Item-Specific Accessories

	Item No.	Pack. Unit
End and intermediate plate, 2.5 mm thick		
orange	281-343	100 (4x25)
gray	281-342	100 (4x25)



The flexible marker carrier, which is placed above the wiring level, can be pushed aside during wiring or commoning. The carrier has two staggered levels for WMB markers that perfectly align with the terminal block decks.

281 Series Accessories

Appropriate marking system: WMB
(see Section 13)

		Item No.	Pack. Unit
Insulation stop, 5 pcs/strip, 0.08 ... 0.2 mm² "s" (0.14 mm² "f-st") ❸	white	281-470	200 (8x25)
Insulation stop, 5 pcs/strip, 0.25 ... 0.5 mm² ❸	light gray	281-471	200 (8x25)
Insulation stop, 5 pcs/strip, 0.25 ... 1.5 mm² ❸	dark gray	281-472	200 (8x25)
Adjacent jumper, insulated, I_N = I_N terminal block	gray	281-402	200 (8x25)
Alternate jumper, insulated, I_N = I_N terminal block	gray	281-409	100 (4x25)
Vertical jumper, insulated, I_N 24 A	gray	281-421	200 (8x25)
Comb-style jumper bar, insulated, I_N = I_N terminal block ❸	2-way	281-482	100 (4x25)
	3-way	281-483	100 (4x25)
Comb-style jumper bar, insulated, I_N = I_N terminal block	5-way	281-485	100 (4x25)

		Item No.	Pack. Unit
Alternate comb-style jumper bar, insulated, I_N = I_N terminal block	2-way	281-492	100 (4x25)
Operating tool, of insulating material ❸	2-way	280-432	1
	3-way	280-433	1
Operating tool, of insulating material	5-way	281-440	1
Screwless end stop, for DIN-35 rail, 6 mm wide	gray	249-116	100 (4x25)
Screwless end stop, for DIN-35 rail, 10 mm wide	gray	249-117	50 (2x25)

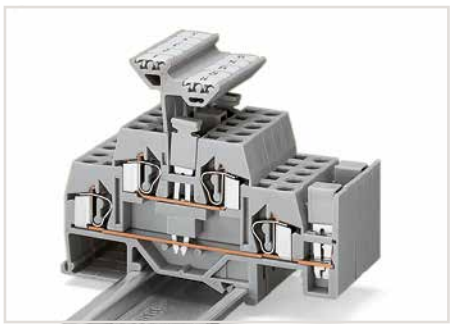

Standard insulated push-in jumpers can be used for the commoning. A vertical jumper allows commoning of upper and lower levels, providing a 4-conductor feedthrough terminal block in one housing.

Overview of certification organizations, see page 654

Triple-Deck Terminal Blocks

2.5 mm², 280 Series

0.08 ... 2.5 mm²	28 ... 12 AWG*	
500 V/6 kV/3 ❶	300 V, 15 A	
I_N 20 A	300 V, 20 A	
Terminal block width 5 mm / 0.197 inch		
8 ... 9 mm / 0.31 ... 0.35 inch		

0.08 ... 2.5 mm²	28 ... 12 AWG*	
500 V/6 kV/3 ❶	300 V, 15 A	
I_N 20 A	300 V, 20 A	
Terminal block width 5 mm / 0.197 inch		
8 ... 9 mm / 0.31 ... 0.35 inch		

0.08 ... 2.5 mm²	28 ... 12 AWG*	
500 V/6 kV/3 ❶		
I_N 20 A	300 V, 20 A	
Terminal block width 5 mm / 0.197 inch		
8 ... 9 mm / 0.31 ... 0.35 inch		

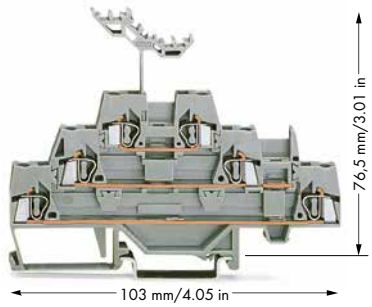

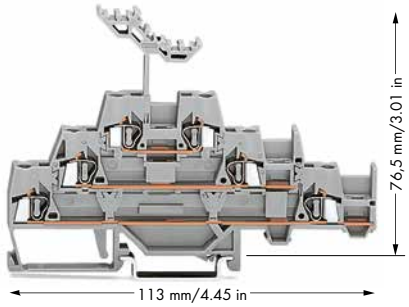

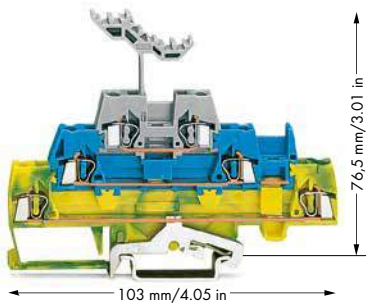

5

	Item No.	Pack. Unit
Triple-deck terminal block, through/through/through terminal block		
gray	280-549	40
blue	280-551	40

Item-Specific Accessories

End and intermediate plate, 2.5 mm thick			
	orange	280-304	50 (2x25)
	gray	280-303	50 (2x25)
Intermediate plate, 1.1 mm thick			
	orange	280-336	50 (2x25)

	Item No.	Pack. Unit
Triple-deck terminal block, through/through/through terminal block, with horizontal jumpering on lower level		
gray	280-550	40

Item-Specific Accessories

End and intermediate plate, 2.5 mm thick			
	orange	280-306	50 (2x25)
	gray	280-305	50 (2x25)
Intermediate plate, 1.1 mm thick			
	orange	280-339	50 (2x25)

	Item No.	Pack. Unit
Triple-deck terminal block, ground conductor/through/through terminal block		
green-yellow/blue/gray	280-547	40
green-yellow/gray/gray	280-557	40

Item-Specific Accessories

End and intermediate plate, 2.5 mm thick			
	orange	280-304	50 (2x25)
	gray	280-303	50 (2x25)
Intermediate plate, 1.1 mm thick			
	orange	280-336	50 (2x25)

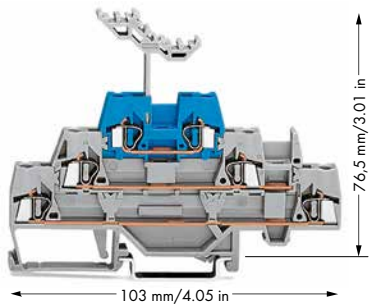

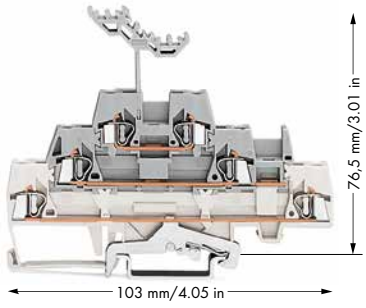

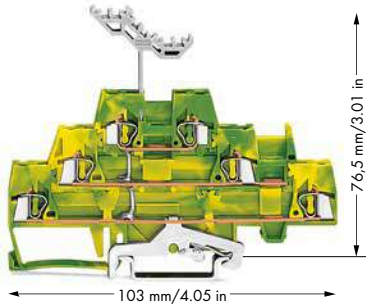

	Item No.	Pack. Unit
Triple-deck terminal block, through/through/through terminal block		
gray/gray/blue	280-552	40

Item-Specific Accessories

End and intermediate plate, 2.5 mm thick			
	orange	280-304	50 (2x25)
	gray	280-303	50 (2x25)
Intermediate plate, 1.1 mm thick			
	orange	280-336	50 (2x25)

	Item No.	Pack. Unit
Triple-deck terminal block, shield/through/through terminal block		
white/gray/gray	280-548	40
white/blue/gray	280-558	40

Item-Specific Accessories

End and intermediate plate, 2.5 mm thick			
	orange	280-304	50 (2x25)
	gray	280-303	50 (2x25)
Intermediate plate, 1.1 mm thick			
	orange	280-336	50 (2x25)

	Item No.	Pack. Unit
Triple-deck terminal block, 6-conductor ground terminal block, internally commoned		
green-yellow	280-597	40

Item-Specific Accessories

End and intermediate plate, 2.5 mm thick			
	orange	280-304	50 (2x25)
	gray	280-303	50 (2x25)
Intermediate plate, 1.1 mm thick			
	orange	280-336	50 (2x25)

Overview of certification organizations, see page 654

Triple-Deck Terminal Blocks

Installation

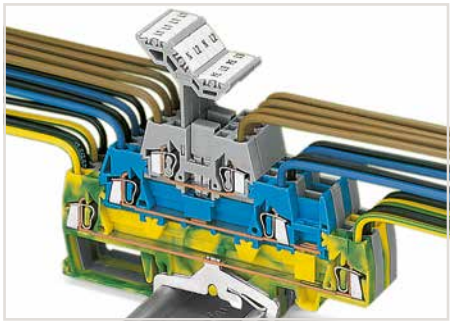

Three-conductor power circuit with additional branch circuit tapping

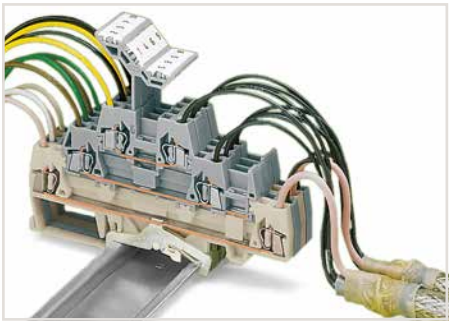

Shielded twisted pair cables

* 12 AWG: THHN, THWN

❶ 500 V = rated voltage
6 kV = rated surge voltage
3 = pollution degree
(see Section 14)

❷ See application notes for:
Insulation stop, page 331
Comb-style jumper bar, page 332
Operating tool, page 332

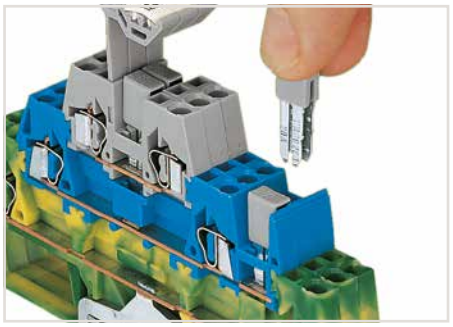

Triple-deck terminal blocks accommodate three circuits of different potentials on three decks; different circuits can be differentiated by color coding either deck (280 Series).

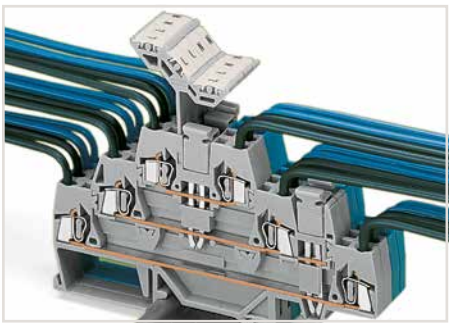

Commoning with vertical and adjacent jumpers.

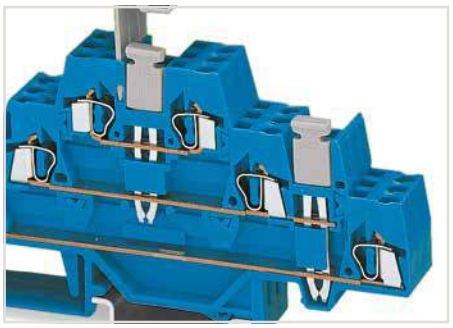

A vertical jumper allows commoning of the upper and lower levels, providing a 6-conductor feedthrough terminal block in one housing. Two adjacent triple-deck terminal blocks may be commoned together on the same level using a push-in adjacent jumper.

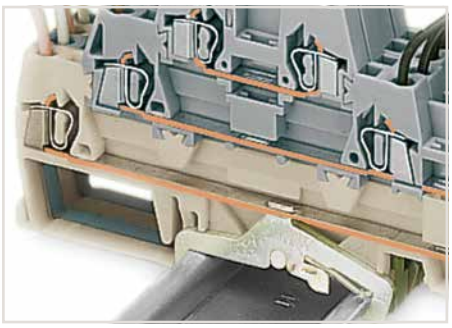

Both ground and shield conductor terminal blocks have a contact foot in the bottom level, automatically establishing direct contact to the carrier rail or busbar.
The flexible marker carrier, which is placed above the wiring level, can be pushed aside during wiring. The carrier has two staggered levels for WMB markers that perfectly align with the terminal block decks.
With a terminal block width of just 5 mm, an effective width of just 1.67 mm for terminal blocks of same or different potentials can be realized for conductors ranging 0.08 mm² ... 2.5 mm² (28 ... 14 AWG).

280 Series Accessories

Appropriate marking systems (see Section 13)

Insulation stop, 5 pcs/strip, 0.08 ... 0.2 mm² "s" (0.14 mm² "f-st") ❷			
	white	**280-470**	200 (8x25)
Insulation stop, 5 pcs/strip, 0.25 ... 0.5 mm² ❷			
	light gray	**280-471**	200 (8x25)
Insulation stop, 5 pcs/strip, 0.75 ... 1 mm² ❷			
	dark gray	**280-472**	200 (8x25)
Adjacent jumper, insulated, I_N = I_N terminal block			
	gray	**280-402**	200 (8x25)
	yellow-green	**280-422**	200 (8x25)
Alternate jumper, insulated, I_N = I_N terminal block			
	gray	**280-409**	100 (4x25)
Vertical jumper, insulated, I_N 24 A			
	gray	**281-421**	200 (8x25)
Comb-style jumper bar, insulated, I_N = I_N terminal block ❷			
	2-way	**280-482**	200 (8x25)
	3-way	**280-483**	200 (8x25)
Comb-style jumper bar, insulated, I_N = I_N terminal block			
	10-way	**280-490**	50 (2x25)
Alternate comb-style jumper bar, insulated, I_N = I_N terminal block			
	2-way	**280-492**	200 (8x25)
Operating tool, of insulating material			
	2-way	**280-432**	1
	3-way	**280-433**	1
Operating tool, of insulating material			
	10-way	**280-440**	1
Screwless end stop, for DIN-35 rail, 6 mm wide			
	gray	**249-116**	100 (4x25)

Quadruple-Deck, Rail-Mount Terminal Blocks for Electric Motor Wiring

4 mm², 281 Series

0.08 ... 4 mm² / 28 ... 12 AWG 400 V/6 kV/3 ❶ I_N 20 A (2.5 mm²) / 300 V, 25 A I_N 25 A (4 mm²) Terminal block width 6 mm / 0.236 inch 8 ... 9 mm / 0.31 ... 0.35 inch	0.08 ... 4 mm² / 28 ... 12 AWG 400 V/6 kV/3 ❶ I_N 20 A (2.5 mm²) / 300 V, 25 A I_N 25 A (4 mm²) Terminal block width 6 mm / 0.236 inch 8 ... 9 mm / 0.31 ... 0.35 inch	0.08 ... 4 mm² / 28 ... 12 AWG 400 V/6 kV/3 ❶ I_N 20 A (2.5 mm²) / 300 V, 25 A I_N 25 A (4 mm²) Terminal block width 6 mm / 0.236 inch 8 ... 9 mm / 0.31 ... 0.35 inch

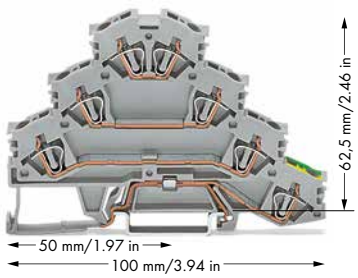

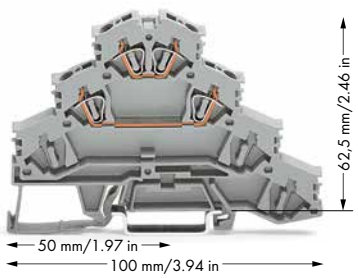

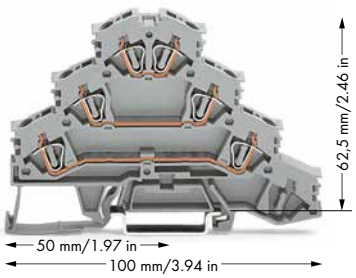

5

Item No.		Pack. Unit
Quadruple-deck, rail-mount terminal block, electric motor wiring rail-mount terminal block, gray		
L1 - L2 - L3 - PE	**281-530**	50

Item No.		Pack. Unit
Quadruple-deck, rail-mount terminal block, electric motor wiring rail-mount terminal block, gray		
L1 - L2	**281-531**	50

Item No.		Pack. Unit
Quadruple-deck, rail-mount terminal block, electric motor wiring rail-mount terminal block, gray		
L1 - L2 - L3	**281-532**	50

281 Series Accessories

Appropriate marking systems: WMB/Marking strips (see Section 13)

End and intermediate plate, 1 mm thick



orange	**281-366**	100 (4x25)
gray	**281-365**	100 (4x25)

Insulation stop, 5 pcs/strip, 0.08 ... 0.2 mm² "s" (0.14 mm² "f-st") ❷



white	**281-470**	200 (8x25)

Insulation stop, 5 pcs/strip, 0.25 ... 0.5 mm² ❷



light gray	**281-471**	200 (8x25)

Insulation stop, 5 pcs/strip, 0.25 ... 1.5 mm² ❷



dark gray	**281-472**	200 (8x25)

Comb-style jumper bar, insulated, I_N = I_N terminal block ❷



2-way	**281-482**	100 (4x25)
3-way	**281-483**	100 (4x25)
5-way	**281-485**	100 (4x25)
10-way	**281-490**	50 (2x25)

Alternate comb-style jumper bar, insulated, I_N = I_N terminal block



2-way	**281-492**	100 (4x25)

Operating tool, of insulating material



2-way	**280-432**	1
3-way	**280-433**	1
5-way	**281-440**	1

Test plug, with 500 mm cable, 2 mm Ø, max. 42 V



red	**210-136**	50

Test plug, with 500 mm cable, 2.3 mm Ø, max. 42 V



yellow	**210-137**	50

WMB Multi marking system, white, 10 strips with 10 markers per card, 5 ... 5.2 mm stretchable

plain	**793-5501**	5

WMB Multi marking system, plain, 10 strips with 10 markers per card, 5 ... 5.2 mm stretchable



yellow	**793-5501/000-002**	
red	**793-5501/000-005**	
blue	**793-5501/000-006**	
gray	**793-5501/000-007**	
orange	**793-5501/000-012**	
light green	**793-5501/000-017**	
green	**793-5501/000-023**	
violet	**793-5501/000-024**	
		5

Marking strip, plain, 7.5 mm wide, 50 m reel

translucent	**709-177**	1

Screwless end stop, for DIN-35 rail, 6 mm wide



gray	**249-116**	100 (4x25)

Screwless end stop, for DIN-35 rail, 10 mm wide



gray	**249-117**	50 (2x25)

Overview of certification organizations, see page 654

Quadruple-Deck, Rail-Mount Terminal Blocks for Electric Motor Wiring

Installation

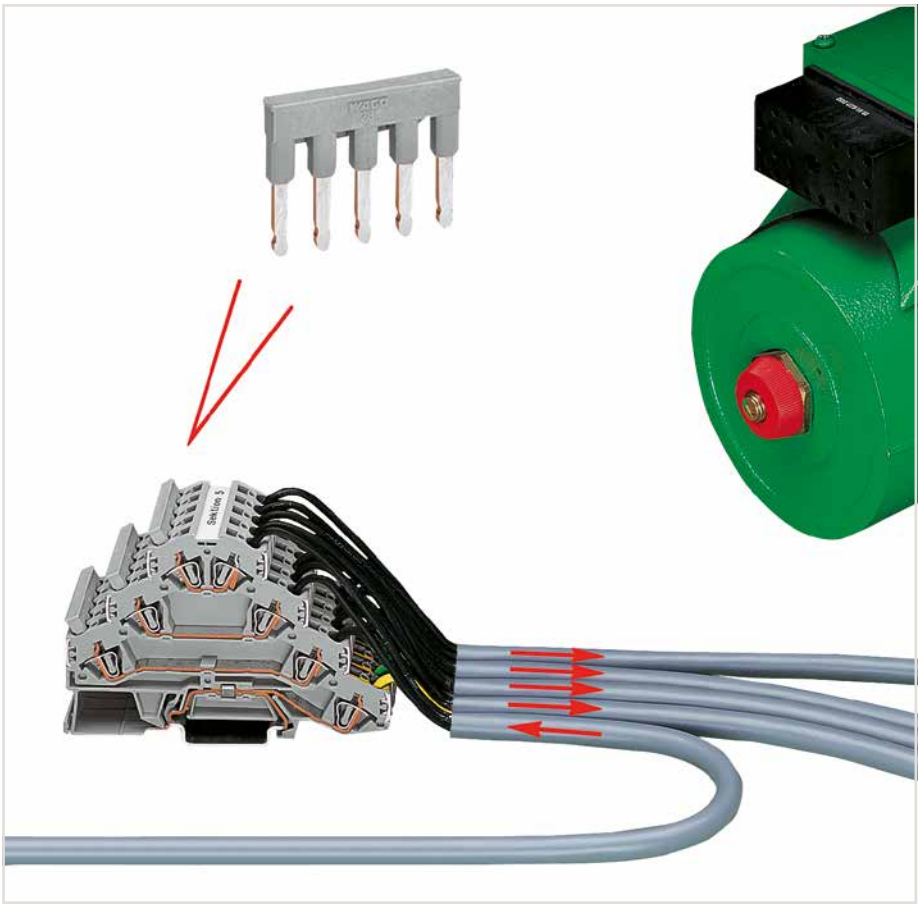

❶ 400 V = rated voltage
6 kV = rated surge voltage
3 = pollution degree
(see Section 14)

❷ See application notes for:
Insulation stop, page 331
Comb-style jumper bar, page 332
Operating tool, page 332



In addition to rail-mount terminal blocks for electric motor wiring, special versions are also available.
• Version **without** ground contact and only two potentials:
These terminal blocks were custom designed to support additional functions, such as engine brakes or temperature sensors. Sharing a common profile, this terminal block version can be put next to the appropriate electric motor wiring terminal block without using intermediate plates. That makes the rail assembly easier to understand and wire. This also prevents wiring errors as no conductor entry is unused.
• Version **without** ground contact and with three potentials:
Clearly designated clamping units iare the primary advantage to this terminal block design. When using devices with protective insulation for example, there are no open ground clamping units that could create confusion.



Commoning using comb-style jumper bars.
Push comb-style jumper bars down until fully inserted.



Testing with voltage tester.

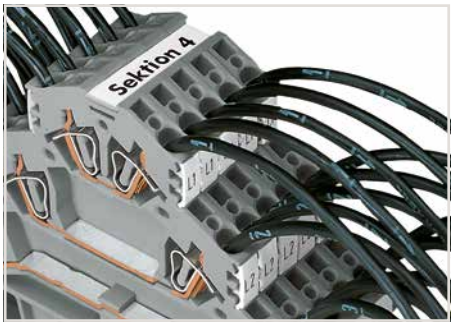

Marking clamping points via WMB Multi Marking System.
Marking a group of terminal blocks via marking strip.
(709-177)

TOPJOB® Classic Rail-Mount Terminal Blocks, 780 ... 785 Series

Description and Installation



By snapping a ground conductor terminal block onto the carrier rail, a direct electrical connection is automatically made to the rail.

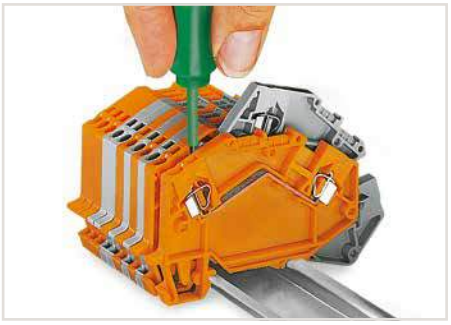

Removing a terminal block from the assembly.

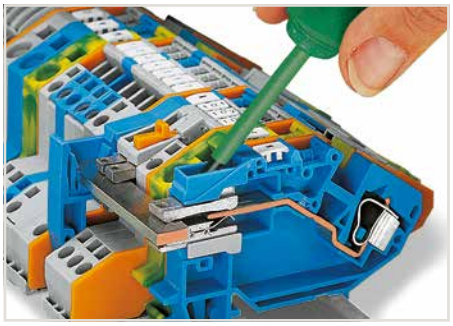

Operating an N-disconnect slide link.

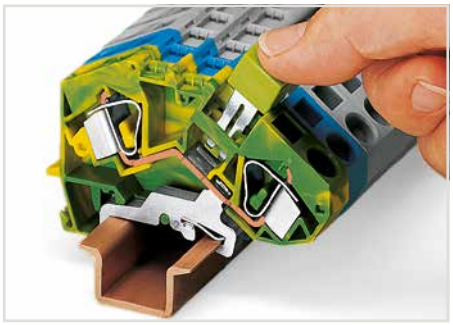

Commoning ground conductor terminal blocks with through terminal blocks is possible in one direction only (via rear side of terminal block) using adjacent jumpers. In addition to the required marking of these blocks, use yellow-green adjacent jumpers.



Staggered jumpers for sophisticated circuit requirements – push jumpers down until fully inserted.

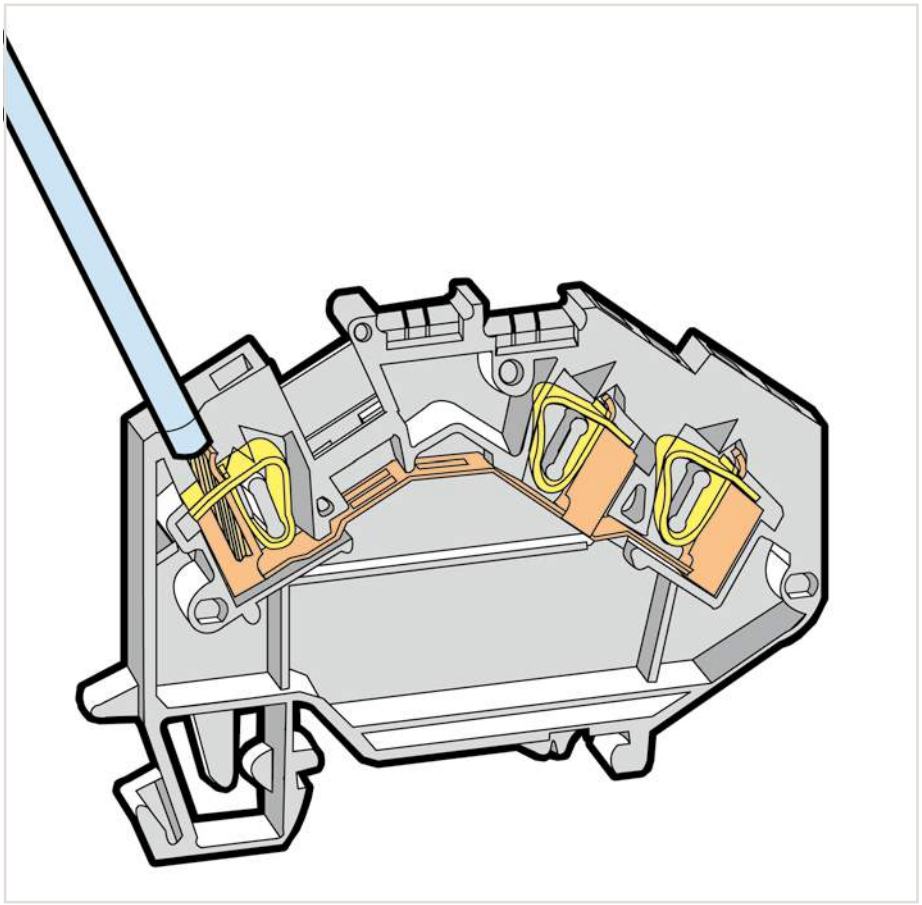

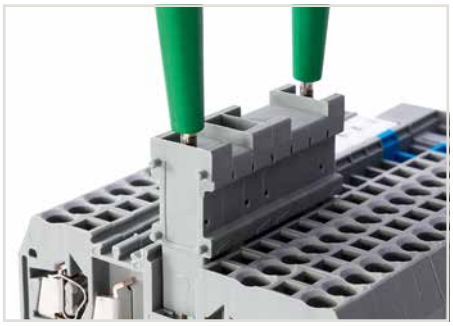

Test plug module assembly – combining test plug and spacer modules.



Insulation stop – prevents the conductor insulation from being pushed into the clamping unit (available for terminal blocks up to 4 mm²/12 AWG).



Labeling via WMB Multi markers and WFB continuous marking strips.

For aluminum conductors, see notes in Section 14. When using ferruled conductors, it is necessary to use a terminal block one size larger than the nominal cross section of the wire.

CAGE CLAMP®

TOPJOB® Classic
Through, Ground/Shield Conductor and Ex Terminal Blocks
2.5 mm², 780 Series

0.08 ... 2.5 mm²	28 ... 12 AWG*
1000 V/8 kV/3 ❶	600 V, 20 A
I_N 24 A	600 V, 20 A
Terminal block width 5 mm / 0.197 inch	
8 ... 9 mm / 0.31 ... 0.35 inch	

0.08 ... 2.5 mm²	28 ... 12 AWG*
1000 V/8 kV/3 ❶	600 V, 20 A
I_N 24 A	600 V, 25 A
Terminal block width 5 mm / 0.197 inch	
8 ... 9 mm / 0.31 ... 0.35 inch	

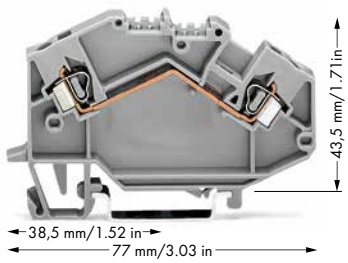

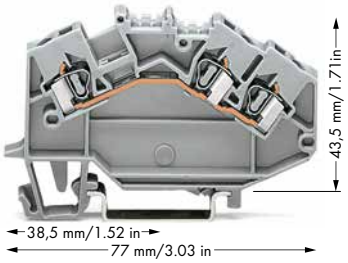

* 12 AWG: THHN, THWN

❶ 1000 V = rated voltage
8 kV = rated surge voltage
3 = pollution degree
(see Section 14)

❷ Suitable for Ex i applications

❸ Suitable for Ex e II applications
0.2 ... 2.5 mm² / 24 ... 12 AWG*
690 V, 23 A
(see Section 14)
Using staggered jumpers reduces the maximum rated voltage to 275 V.

❹ See application notes for:
Insulation stop, page 331
Staggered jumper, page 333
Push-in type wire jumper, page 333
Comb-style jumper bar, page 332
Operating tool, page 332
Test plug modules, page 326
Banana plug, page 330

5

	Item No.	Pack. Unit
2-conductor through terminal block		
gray	780-601	50
blue	780-604 ❸	50
orange	780-602	50
light gray Ex	780-992 ❹	50
2-conductor ground terminal block		
green-yellow	780-607	50
green-yellow Ex	780-607/999-950 ❹	50
Other terminal blocks with the same profile:		
N-disconnect	780-613	Page 255

	Item No.	Pack. Unit
3-conductor through terminal block		
gray	780-631	50
blue	780-651 ❸	50
orange	780-654	50
light gray Ex	780-993 ❹	50
3-conductor ground terminal block		
green-yellow	780-637	50
green-yellow Ex	780-637/999-950 ❹	50
3-conductor shield terminal block		
white	780-640	50

780 Series Accessories

Appropriate marking systems: WMB/WFB
(see Section 13)

End and intermediate plate, 1.5 mm thick

orange 780-317 100 (4x25)

Separator for Ex e/Ex i application, orange, 3 mm thick

125.5 mm 209-192 50 (2x25)

Insulation stop, 5 pcs/strip, 0.08 ... 0.2 mm² "s" ❹
(0.14 mm² "f-st")

white 280-470 200 (8x25)

Insulation stop, 5 pcs/strip, 0.25 ... 0.5 mm² ❹

light gray 280-471 200 (8x25)

Insulation stop, 5 pcs/strip, 0.75 ... 1 mm² ❹

dark gray 280-472 200 (8x25)

Adjacent jumper, insulated, I_N = I_N terminal block

gray 280-402 200 (8x25)
yellow-green 280-422 200 (8x25)

Alternate jumper, insulated, I_N = I_N terminal block

gray 280-409 100 (4x25)

Staggered jumper, insulated, Spacing: 5 mm, I_N 24 A ❹

from 1 to 2 780-452 100 (4x25)
from 1 to 3 780-453 100 (4x25)
from 1 to 4 780-454 100 (4x25)
from 1 to 5 780-455 50 (2x25)
from 1 to 6 780-456 50 (2x25)
from 1 to 7 780-457 50 (2x25)
from 1 to 8 780-458 50 (2x25)

Push-in type wire jumper, insulated, wire size 0.75 mm², ❹
I_N 9 A

L = 60 mm 249-125 10
L = 110 mm 249-126 10
L = 250 mm 249-127 10

Protective warning marker, with black high-voltage symbol, for 5 terminal blocks

yellow 280-415 100 (4x25)

Comb-style jumper bar, insulated, I_N = I_N terminal block ❹

2-way 280-482 200 (8x25)
3-way 280-483 200 (8x25)

Accessories

Alternate comb-style jumper bar, insulated, I_N = I_N terminal block

2-way 280-492 200 (8x25)

Operating tool, of insulating material ❹

2-way 280-432 1
3-way 280-433 1

Test plug module, snaps together, 5 mm wide ❹

gray 280-418 100 (4x25)

Spacer module, snaps together, 5 mm wide

gray 280-419 100 (4x25)

Test plug adapter, 5 mm wide, for 210-137 Test Plug (2.3 mm Ø), for 1.5 ... 4 mm² terminal blocks

gray 280-404 100 (4x25)

Test plug, with 500 mm cable, 2.3 mm Ø, max. 42 V

yellow 210-137 50

Test plug adapter, 8.3 mm wide, for 4 mm Ø test plug, for 1.5 ... 10 mm² terminal blocks

gray 209-170 50 (2x25)

Test plug adapter, 6 mm wide, with CAGE CLAMP®, for 0.08 ... 2.5 mm²

I_N 24 A 281-407 100 (4x25)

Banana plug, for 4 mm socket diameter, color mixed, 10 x orange, white, black, blue, yellow ❺

215-111 50

TOPJOB® Tool, specialty blade, for all TOPJOB® Terminal Blocks

777-310 1

Screwless end stop, for DIN-35 rail, 10 mm wide

gray 249-117 50 (2x25)

Screwless end stop, for DIN-35 rail, 6 mm wide

gray 249-116 100 (4x25)

CAGE CLAMP®

TOPJOB® Classic
Through, Ground Conductor and Ex Terminal Blocks
4 mm², 781 Series

0.08 … 4 mm²	28 … 12 AWG
1000 V/8 kV/3 ❶	600 V, 20 A
I_N 32 A	600 V, 20 A
Terminal block width 6 mm / 0.236 inch	
9 … 10 mm / 0.35 … 0.39 inch	

0.08 … 4 mm²	28 … 12 AWG
1000 V/8 kV/3 ❶	600 V, 20 A
I_N 32 A	600 V, 20 A
Terminal block width 6 mm / 0.236 inch	
9 … 10 mm / 0.35 … 0.39 inch	

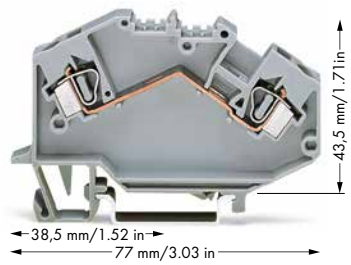

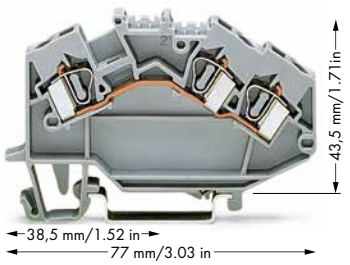

❶ 1000 V = rated voltage
8 kV = rated surge voltage
3 = pollution degree
(see Section 14)

❷ Suitable for Ex i applications

❸ Suitable for Ex e II applications
0.2 … 4 mm² / 24 … 12 AWG
690 V
30 A for 2-conductor terminal blocks
27 A for 3-conductor terminal blocks
(see Section 14)
Using staggered jumpers reduces the maximum rated voltage to 275 V.

❹ See application notes for:
Insulation stop, page 331
Staggered jumper, page 333
Push-in type wire jumper, page 333
Comb-style jumper bar, page 332
Operating tool, page 332
Test plug modules, page 326
Banana plug, page 330

5

	Item No.	Pack. Unit
2-conductor through terminal block		
gray	**781-601**	50
blue	**781-604** ❷	50
light gray Ex	**781-992** ❸	50
2-conductor ground terminal block		
green-yellow	**781-607**	50
green-yellow Ex	**781-607/999-950** ❸	50
Other terminal blocks with the same profile:		
N-disconnect	**781-613**	Page 255
Potential	**781-623**	Page 255

	Item No.	Pack. Unit
3-conductor through terminal block		
gray	**781-631**	50
blue	**781-651** ❷	50
light gray Ex	**781-993** ❸	50
3-conductor ground terminal block		
green-yellow	**781-637**	50
green-yellow Ex	**781-637/999-950** ❸	50
Other terminal blocks with the same profile:		
N-disconnect	**781-643**	Page 255
Potential	**781-653**	Page 255

781 Series Accessories

Appropriate marking systems: WMB/WFB
(see Section 13)

End and intermediate plate, 1.5 mm thick

orange **780-317** 100 (4x25)

Separator for Ex e/Ex i application, orange, 3 mm thick

125.5 mm **209-192** 50 (2x25)

Insulation stop, 5 pcs/strip, 0.08 … 0.2 mm² "s" ❹

(0.14 mm² "f-st")
white **281-470** 200 (8x25)

Insulation stop, 5 pcs/strip, 0.25 … 0.5 mm² ❹

light gray **281-471** 200 (8x25)

Insulation stop, 5 pcs/strip, 0.25 … 1.5 mm² ❹

dark gray **281-472** 200 (8x25)

Adjacent jumper, insulated, I_N = I_N terminal block

gray **281-402** 200 (8x25)
yellow-green **281-422** 200 (8x25)

Alternate jumper, insulated, I_N = I_N terminal block

gray **281-409** 100 (4x25)

Staggered jumper, insulated, Spacing: 6 mm, I_N 32 A ❹

from 1 to 2 **781-452** 100 (4x25)
from 1 to 3 **781-453** 100 (4x25)
from 1 to 4 **781-454** 100 (4x25)
from 1 to 5 **781-455** 50 (2x25)
from 1 to 6 **781-456** 50 (2x25)

Push-in type wire jumper, insulated, wire size 0.75 mm², I_N 9 A ❹

L = 60 mm **249-125** 10
L = 110 mm **249-126** 10
L = 250 mm **249-127** 10

Protective warning marker, with black high-voltage symbol, for 5 terminal blocks

yellow **281-415** 100 (4x25)

Comb-style jumper bar, insulated, I_N = I_N terminal block ❹

2-way **281-482** 100 (4x25)
3-way **281-483** 100 (4x25)

Alternate comb-style jumper bar, insulated, I_N = I_N terminal block

2-way **281-492** 100 (4x25)

Accessories

Operating tool, of insulating material ❹

2-way **280-432** 1
3-way **280-433** 1

Test plug module, snaps together, 6 mm wide ❹

gray **281-418** 100 (4x25)

Spacer module, snaps together, 6 mm wide

gray **281-419** 100 (4x25)

Test plug adapter, 5 mm wide, for 210-137 Test Plug (2.3 mm Ø), for 1.5 … 4 mm² terminal blocks

gray **280-404** 100 (4x25)

Test plug, with 500 mm cable, 2.3 mm Ø, max. 42 V

yellow **210-137** 50

Test plug adapter, 8.3 mm wide, for 4 mm Ø test plug, for 1.5 … 10 mm² terminal blocks

gray **209-170** 50 (2x25)

Test plug adapter, 6 mm wide, with CAGE CLAMP®, for 0.08 … 2.5 mm²

I_N 24 A **281-407** 100 (4x25)

Banana plug, for 4 mm socket diameter, color mixed, 10 x orange, white, black, blue, yellow ❹

215-111 50

TOPJOB® Tool, specialty blade, for all TOPJOB® Terminal Blocks

777-310 1

Screwless end stop, for DIN-35 rail, 6 mm wide

gray **249-116** 100 (4x25)

Screwless end stop, for DIN-35 rail, 10 mm wide

gray **249-117** 50 (2x25)

Overview of certification organizations, see page 654

CAGE CLAMP®

TOPJOB® Classic
Through, Ground Conductor and Ex Terminal Blocks
6 mm², 782 Series and 10 (16) mm², 784 Series

0.2 … 6 mm²	24 … 10 AWG
1000 V/8 kV/3 ❷	600 V, 30 A
I_N 41 A	600 V, 25 A
Terminal block width 8 mm / 0.315 inch	
12 … 13 mm / 0.47 … 0.51 inch	

0.2 … 10 (16) mm² ❶	24 … 6 AWG
1000 V/8 kV/3 ❷	600 V, 50 A
I_N 57 A	600 V, 35 A
Terminal block width 10 mm / 0.394 inch	
12 … 13 mm / 0.47 … 0.51 inch	

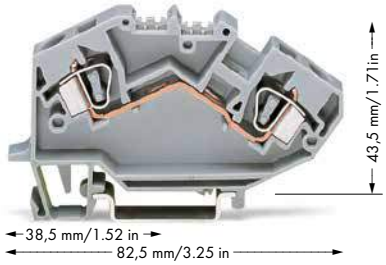

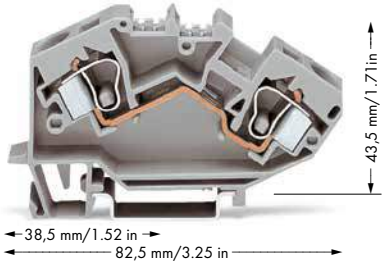

❶ Max. connector size: 16 mm²
❷ 1000 V = rated voltage
8 kV = rated surge voltage
3 = pollution degree
(see Section 14)
❸ Suitable for Ex i applications
❹ Suitable for Ex e II applications
0.2 … 6 mm² / 24 … 10 AWG
690 V, 39 A
(see Section 14)
❺ Suitable for Ex e II applications
0.2 … 10 mm² / 24 … 8 AWG
690 V, 53 A
(see Section 14)
❻ See application notes for:
Test plug module, page 329
Banana plug, page 330

	Item No.	Pack. Unit
2-conductor through terminal block		
gray	**782-601**	25
blue	**782-604** ❸	25
light gray	**782-992** ❹	50
2-conductor ground terminal block		
green-yellow	**782-607**	25
green-yellow	**782-607/999-950** ❹	25
Other terminal blocks with the same profile:		
N-disconnect	**782-613**	Page 256
Potential	**782-623**	Page 256

Item-Specific Accessories

Adjacent jumper, insulated, I_N 41 A
gray **282-402** 100 (4x25)
yellow-green **282-422** 100 (4x25)

Alternate jumper, insulated, I_N 41 A
gray **282-409** 100 (4x25)

Protective warning marker, with black high-voltage symbol, for 5 terminal blocks
yellow **282-415** 100 (4x25)

B-type test plug module, snaps together, 8 mm wide ❻
gray **709-310** 100 (4x25)

B-type spacer module, snaps together, 8 mm wide
gray **709-311** 100 (4x25)

	Item No.	Pack. Unit
2-conductor through terminal block		
gray	**784-601**	25
blue	**784-604** ❸	25
light gray	**784-992** ❺	25
2-conductor ground terminal block		
green-yellow	**784-607**	25
green-yellow	**784-607/999-950** ❺	25
Other terminal blocks with the same profile:		
N-disconnect	**784-613**	Page 256
Potential	**784-623**	Page 256

Item-Specific Accessories

Adjacent jumper, insulated, I_N 57 A
gray **284-402** 100 (4x25)
yellow-green **284-422** 100 (4x25)

Alternate jumper, insulated, I_N 57 A
gray **284-409** 50 (2x25)

Protective warning marker, with black high-voltage symbol, for 5 terminal blocks
yellow **284-415** 50 (2x25)

B-type test plug module, snaps together, 8 mm wide ❻
gray **709-310** 100 (4x25)

B-type spacer module, snaps together, 8 mm wide
gray **709-311** 100 (4x25)

B-type spacer plate, snaps together, 2 mm wide
gray **709-312** 100 (4x25)

Finger guard, touch-proof cover protects unused conductor entries
yellow **284-400** 100 (4x25)

Accessories

WMB/WFB
(see Section 13)

End and intermediate plate, 1.5 mm thick
orange **782-317** 100 (4x25)

Separator for Ex e/Ex i application, orange, 3 mm thick
125.5 mm **209-192** 50 (2x25)

Test plug adapter, 8.3 mm wide, for 4 mm Ø test plug, for 1.5 … 10 mm² terminal blocks
gray **209-170** 50 (2x25)

Banana plug, for socket 4 mm Ø, color mixed ❻
215-111 50

Busbar carrier, with end stop function and detachable separator plate, snaps onto DIN-35 rail, 8 mm thick
blue **777-305** 25

WFB continuous marking strip, 1000 mm long
transparent **210-612** 10

Carrier for WFB continuous marking strip, snaps into marker slot
209-185 200 (8x25)

TOPJOB® Tool, specialty blade, for all TOPJOB® Terminal Blocks
777-310 1

Screwless end stop, for DIN-35 rail, 6 mm wide
gray **249-116** 100 (4x25)

Screwless end stop, for DIN-35 rail, 10 mm wide
gray **249-117** 50 (2x25)

5

CAGE CLAMP®

TOPJOB® Classic
Through, Ground Conductor and Ex Terminal Blocks
16 mm², 783 Series and 35 mm², 785 Series

0.2 ... 16 mm²	24 ... 6 AWG
1000 V/8 kV/3 ❶	600 V, 65 A
I_N 76 A	600 V, 50 A

Terminal block width 12 mm / 0.472 inch
16 ... 17 mm / 0.63 ... 0.67 inch

6 ... 35 mm²	8 ... 2 AWG
1000 V/8 kV/3 ❶	600 V, 115 A
I_N 125 A	600 V, 125 A

Terminal block width 16 mm / 0.63 inch
23 mm / 0.91 inch

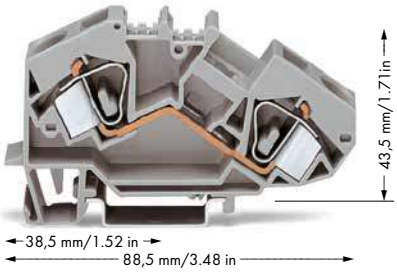

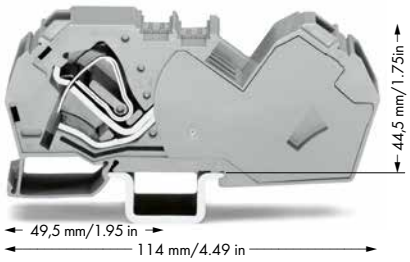

❶ 1000 V = rated voltage
8 kV = rated surge voltage
3 = pollution degree
(see Section 14)

❷ Suitable for Ex i applications

❸ Suitable for Ex e II applications
0.2 ... 16 mm² / 24 ... 6 AWG
690 V, 68 A
0.2 ... 10 mm² / 24 ... 8 AWG
for ground conductor terminal blocks
(see Section 14)

5

2-conductor through terminal block

	Item No.	Pack. Unit
gray	**783-601**	25
blue	**783-604** ❷	25
light gray Ex	**783-992** ❸	25

2-conductor ground terminal block

	Item No.	Pack. Unit
green-yellow	**783-607**	25
green-yellow Ex	**783-607/999-950** ❸	25

Other terminal blocks with the same profile:

N-disconnect	**783-613**	Page 256
Potential	**783-623**	Page 256

Item-Specific Accessories

End and intermediate plate, 1.5 mm thick

orange **783-317** 100 (4x25)

Adjacent jumper, insulated, I_N 70 A

gray **283-402** 50 (2x25)
yellow-green **283-422** 50 (2x25)

Alternate jumper, insulated, I_N 76 A

gray **283-409** 50 (2x25)

Protective warning marker, with black high-voltage symbol, for 5 terminal blocks

yellow **283-415** 50 (2x25)

Finger guard, touch-proof cover protects unused conductor entries

yellow **283-400** 100 (4x25)

Power tap, I_N 24 A, with 500 mm cable, for terminal blocks 16 mm² (283/783 Series) and 35 mm² (285/785 Series)

gray **283-407** 25

2-conductor through terminal block, only on DIN-35 x 15 rail

	Item No.	Pack. Unit
gray	**785-601**	15
blue	**785-604**	15

2-conductor ground terminal block, only on DIN-35 x 15 rail

	Item No.	Pack. Unit
green-yellow	**785-607**	15

Other terminal blocks with the same profile:

N-disconnect	**785-613**	Page 257
Potential	**785-623**	Page 257

Item-Specific Accessories

Adjacent jumper, insulated, I_N 85 A

gray **285-435** 50 (2x25)

Protective warning marker, with black high-voltage symbol, for 5 terminal blocks

yellow **285-416** 50 (2x25)

Finger guard, touch-proof cover protects unused conductor entries

yellow **285-401** 100

Power tap, I_N 24 A, with 500 mm cable, for terminal blocks 16 mm² (283/783 Series) and 35 mm² (285/785 Series)

gray **283-407** 25

Accessories
WMB/WFB
(see Section 13)

Test plug adapter, 11.6 mm wide, for 4 mm Ø test plug, for 1.5 ... 16 mm² terminal blocks

gray **283-404** 25

Banana plug, for socket 4 mm Ø, color mixed

215-111 50

Busbar carrier, with end stop function and detachable separator plate, snaps onto DIN-35 rail, 8 mm thick

blue **777-305** 25

WFB continuous marking strip, 1000 mm long

transparent **210-612** 10

Carrier for WFB continuous marking strip, snaps into marker slot

209-185

TOPJOB® Tool, specialty blade, for all TOPJOB® Terminal Blocks

777-310 1

Screwless end stop, for DIN-35 rail, 6 mm wide

gray **249-116** 100 (4x25)

Screwless end stop, for DIN-35 rail, 10 mm wide

gray **249-117** 50 (2x25)

Overview of certification organizations, see page 654

CAGE CLAMP®

TOPJOB® Classic
N-Conductor and Power Distribution Disconnect Terminal Blocks
2.5 mm², 780 Series and 4 mm², 781 Series

0.08 ... 2.5 mm² | **28 ... 12 AWG***	**0.08 ... 4 mm²** | **28 ... 12 AWG**
400 V/6 kV/3 ❶ | **600 V, 20 A**	**400 V/6 kV/3 ❶** | **600 V, 20 A**
I_N 24 A	**I_N 32 A**
Terminal block width 5 mm / 0.197 inch	**Terminal block width 6 mm / 0.236 inch**
8 ... 9 mm / 0.31 ... 0.35 inch	**9 ... 10 mm / 0.35 ... 0.39 inch**

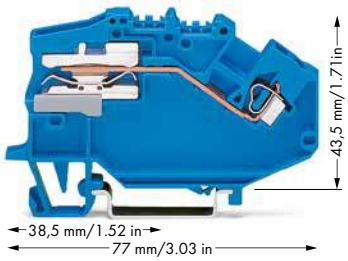

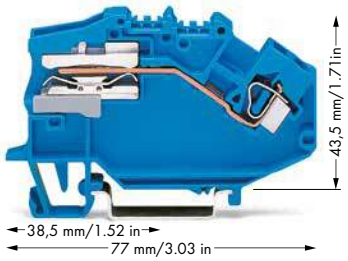

* 12 AWG: THHN, THWN

❶ 400 V = rated voltage
8 kV = rated surge voltage
3 = pollution degree
(see Section 14)

❷ See page 257

❸ See page 257

	Item No.	Pack. Unit
1-conductor N-disconnect terminal block		
blue	**780-613** ❷	50
Other terminal blocks with the same profile:		
Through	**780-601**	Page 251

	Item No.	Pack. Unit
1-conductor N-disconnect terminal block		
blue	**781-613** ❷	50
1-conductor power distribution disconnect terminal block		
gray	**781-623** ❸	50
Other terminal blocks with the same profile:		
Through	**781-601**	Page 252

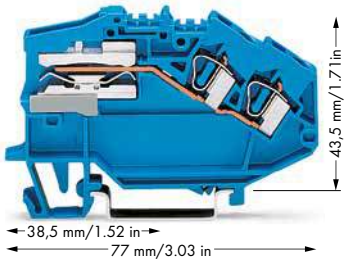

	Item No.	Pack. Unit
2-conductor N-disconnect terminal block		
blue	**781-643** ❷	50
2-conductor power distribution disconnect terminal block		
gray	**781-653** ❸	50
Other terminal blocks with the same profile:		
Through	**781-631**	Page 252

Accessories

WMB/WFB
(see Section 13)

End and intermediate plate, 1.5 mm thick



orange **780-317** 100 (4x25)

Busbar carrier, not suitable as end stop, snaps onto DIN-35 rail, 1.5 mm thick



blue **780-321** 100 (4x25)

Busbar carrier, with end stop function and detachable separator plate, snaps onto DIN-35 rail, 8 mm thick



blue **777-305** 25

Straight busbar, tin-plated, 1000 mm long, copper (10 x 3) mm



I_N 140 A **210-133** 1

Busbar cover, 1000 mm long



transparent **777-303** 1

Connector, for N-busbar, with blue cover, 2.5 ... 16 mm²



blue **210-281** 100 (2x50)

Connector, for N-busbar, 2.5 ... 35 mm²



unplated **209-105** 50

Lock-out, prevents reclosing of slide link, snap-on type



orange **777-300** 100 (4x25)

Step-down test plug, from 4 mm socket to 2 mm plug, max. 42 V



red **210-297** 100 (4x25)

TOPJOB® Classic
N-Conductor and Power Distribution Disconnect Terminal Blocks
6 mm², 782 Series and 10 mm², 784 Series and 16 mm², 783 Series and 35 mm², 785 Series

0.2 … 6 mm² | 24 … 10 AWG 400 V/6 kV/3 ❷ | 600 V, 30 A I_N 41 A Terminal block width 8 mm / 0.315 inch 12 … 13 mm / 0.47 … 0.51 inch	0.2 … 10 (16) mm² ❶ | 24 … 6 AWG 400 V/6 kV/3 ❷ I_N 57 A Terminal block width 10 mm / 0.394 inch 12 … 13 mm / 0.47 … 0.51 inch	0.2 … 16 mm² | 24 … 6 AWG 400 V/6 kV/3 ❷ | 600 V, 65 A I_N 68 A Terminal block width 12 mm / 0.472 inch 16 … 17 mm / 0.63 … 0.67 inch

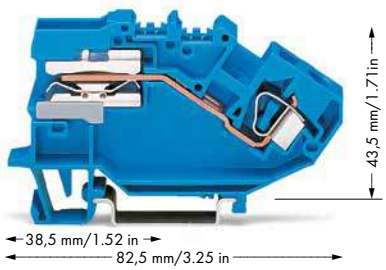

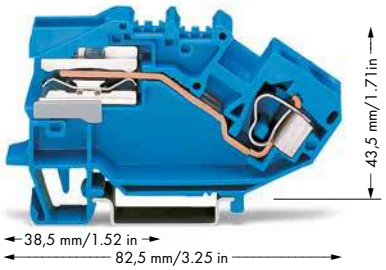

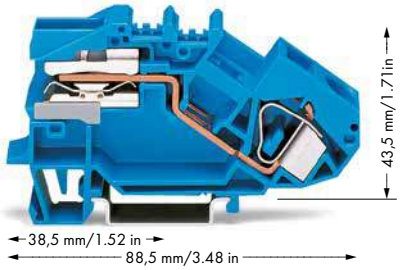

5

Item No.		Pack. Unit
1-conductor N-disconnect terminal block		
blue	**782-613** ❸	25
1-conductor power distribution disconnect terminal block		
gray	**782-623** ❹	25
Other terminal blocks with the same profile:		
Through	**782-601**	Page 253

Item No.		Pack. Unit
1-conductor N-disconnect terminal block		
blue	**784-613** ❸	25
1-conductor power distribution disconnect terminal block		
gray	**784-623** ❹	25
Other terminal blocks with the same profile:		
Through	**784-601**	Page 253

Item No.		Pack. Unit
1-conductor N-disconnect terminal block		
blue	**783-613** ❸	25
1-conductor power distribution disconnect terminal block		
gray	**783-623** ❹	25
Other terminal blocks with the same profile:		
Through	**783-601**	Page 254

Item-Specific Accessories

Busbar carrier, not suitable as end stop, snaps onto DIN-35 rail, 1.5 mm thick



blue **782-321** 100 (4x25)

Item-Specific Accessories

Busbar carrier, not suitable as end stop, snaps onto DIN-35 rail, 1.5 mm thick



blue **784-321** 100 (4x25)

Item-Specific Accessories

Busbar carrier, not suitable as end stop, snaps onto DIN-35 rail, 1.5 mm thick



blue **783-321** 100 (4x25)

Accessories

Appropriate marking systems: WMB/WFB (see Section 13)

Busbar carrier, with end stop function and detachable separator plate, snaps onto DIN-35 rail, 8 mm thick



blue **777-305** 25

Straight busbar, tin-plated, 1000 mm long, copper (10 x 3) mm



I_N 140 A **210-133** 1

Busbar cover, 1000 mm long



transparent **777-303** 1

Connector, for N-busbar, with blue cover, 2.5 … 16 mm²



blue **210-281** 100 (2x50)

Connector, for N-busbar, 2.5 … 35 mm²



unplated **209-105** 50

Lock-out, prevents reclosing of slide link, snap-on type



orange **782-300** 100 (4x25)

Test plug, with 500 mm cable, 2.3 mm Ø, max. 42 V



yellow **210-137** 50

Step-down test plug, from 4 mm socket to 2 mm plug, max. 42 V



red **210-297** 100 (4x25)

WMB Multi marking system, white, 10 strips with 10 markers per card, for terminal widths 5 … 17.5 mm

plain **793-501** 5

WMB Multi marking system, white, 10 strips with 10 markers per card, 5 … 5.2 mm stretchable

plain **793-5501** 5

WFB continuous marking strip, 1000 mm long

transparent **210-612** 10

Carrier for WFB continuous marking strip, snaps into marker slot



209-185 200 (8x25)

TOPJOB® Tool, specialty blade, for all TOPJOB® Terminal Blocks



777-310 1

Screwless end stop, for DIN-35 rail, 6 mm wide



gray **249-116** 100 (4x25)

Screwless end stop, for DIN-35 rail, 10 mm wide



gray **249-117** 50 (2x25)

Overview of certification organizations, see page 654

6 … 35 mm² | **8 … 2 AWG**
400 V/6 kV/3 ❷
I_N 125 A | **600 V, 125 A**
Terminal block width 16 mm / 0.63 inch
23 mm / 0.91 inch

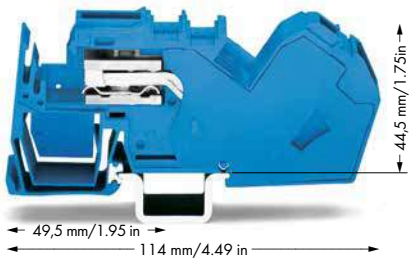



The 35 mm² (2 AWG) terminal blocks are the latest addition to WAGO TOPJOB®, the professional range of rail-mount terminal blocks for building installations. These terminal blocks, which include an end plate, are just 16 mm wide. Their compact design allows them to fit into standard distribution boxes. The lower conductor entry angle makes it much easier to terminate 35 mm² (2 AWG) conductors.
Furthermore, the N-busbar holder is integrated into the terminal block, eliminating separate holders.

❶ Max. connector size: 16 mm²
❷ 400 V = rated voltage
8 kV = rated surge voltage
3 = pollution degree
(see Section 14)
❸ See bottom of column 5
❹ See bottom of column 6

	Item No.	Pack. Unit
1-conductor N-disconnect terminal block, only on DIN-35 x 15 rail		
blue	**785-613** ❸	15
1-conductor power distribution disconnect terminal block, only on DIN-35 x 15 rail		
gray	**785-623** ❹	15
Other terminal blocks with the same profile:		
Through	**785-601**	Page 254

Item-Specific Accessories

Busbar carrier, not suitable as end stop, snaps onto DIN-35 rail, 1.5 mm thick			
	blue	**783-321**	100 (4x25)

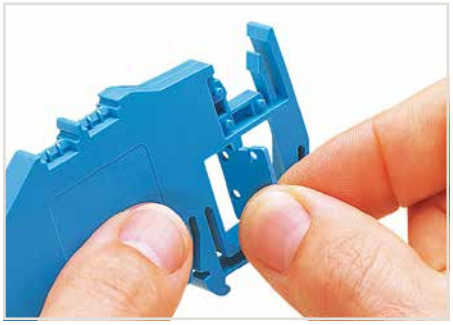

Removing the separator plate from the busbar carrier or from the N-disconnect terminal block.

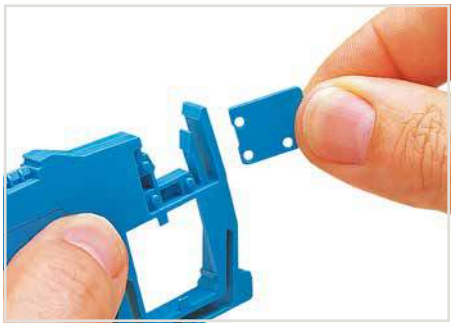

Inserting the separator plate into the busbar carrier to protect the N-busbar against accidental contact.

For the construction and operation of power installations in fire-prone, hazardous locations or public buildings – such as conference centers, stores, hospitals, schools, theaters or hotels – the DIN VDE 0100-710 or DIN VDE 0100-718 standards shall be observed. DIN VDE 0100-482 shall also be observed for fire-prone, hazardous locations. These VDE regulations mandate that every neutral conductor must be provided with a disconnection device so, e.g., insulation testing is possible for every circuit without disconnecting the N-conductor.

WAGO N-disconnect terminal blocks meet this requirement.

According to DIN VDE 0100-710, "Requirements for operating facilities, rooms and special installations – medical facilities," equipotential bonding conductors shall be run on a potential equalization busbar. The potential equalization busbar and the protective ground conductor busbar must be mounted in a common housing and be connected to each other using a disconnectable copper conductor of minimum 16 mm² (6 AWG). Furthermore, all equipotential bonding conductors must be connected to the potential equalization busbar and clearly arranged so they can be disconnected individually and accessed at any time. Depending on their function, they must be provided with captive marking.

WAGO's power distribution disconnect terminal blocks meet these requirements.

5

Disconnect/Test Terminal Blocks with a Pivoting Knife Disconnect, 280 Series

Description and Installation

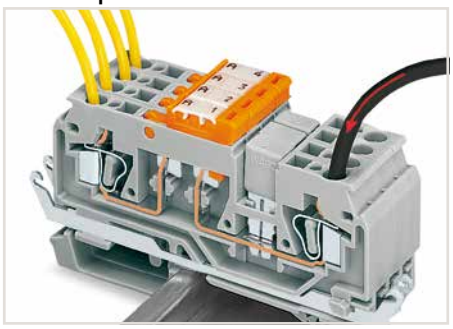

Power distribution using an adjacent jumper – knife disconnect used to disconnect individual outputs.

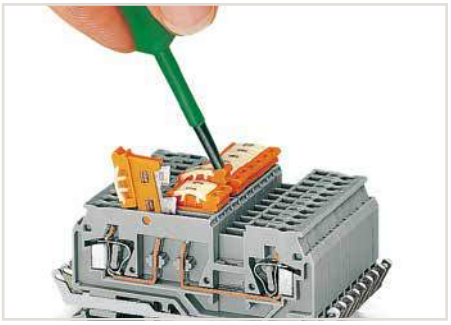

Pivoting a knife disconnect.

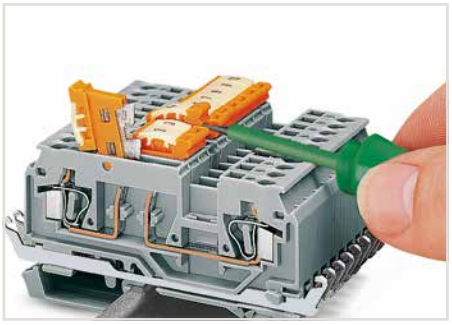

Pivoting knife disconnect clearly indicates circuit state by defined, notched positions "ON" <–> "OFF."

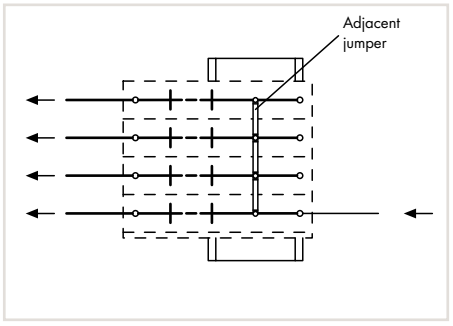

Diagram of the assembly as shown in the picture above.

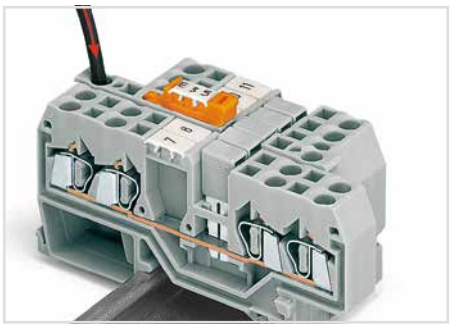

Power distribution using disconnect link in supply line – disconnection of all outputs.

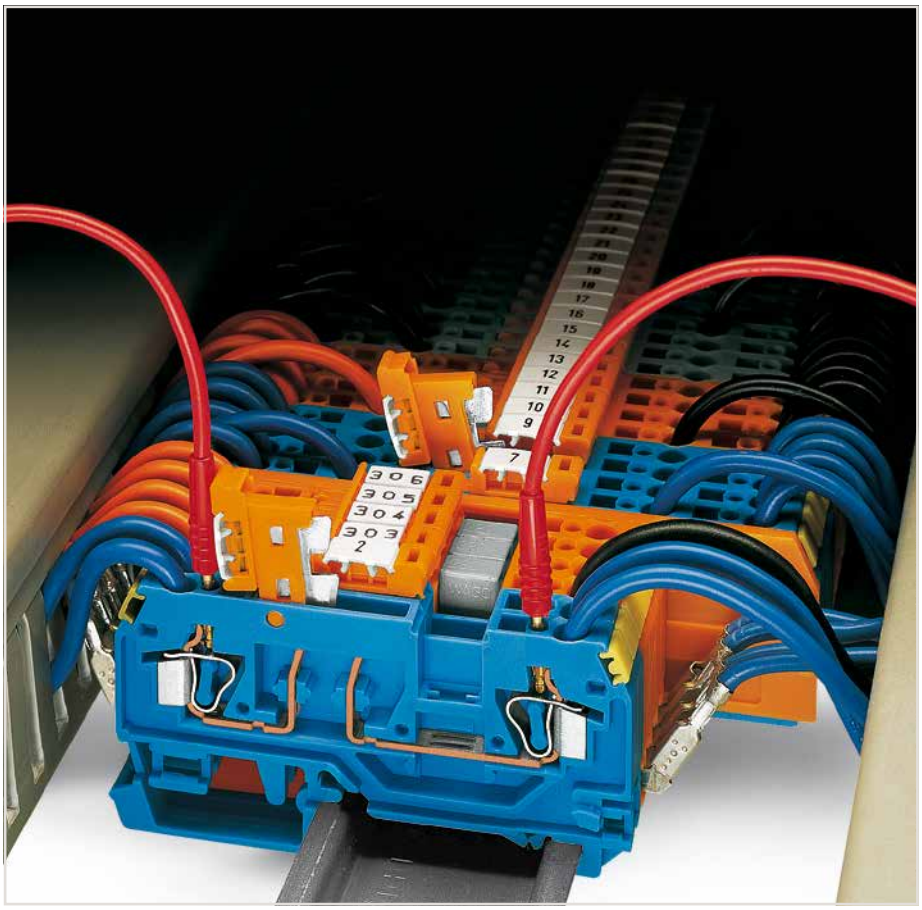

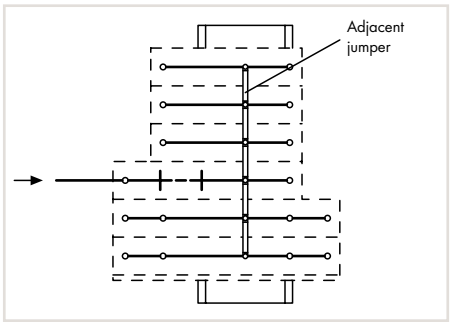

Diagram of the assembly as shown in the picture above.



Staggered jumpers for sophisticated circuit requirements – push jumpers down until fully inserted.

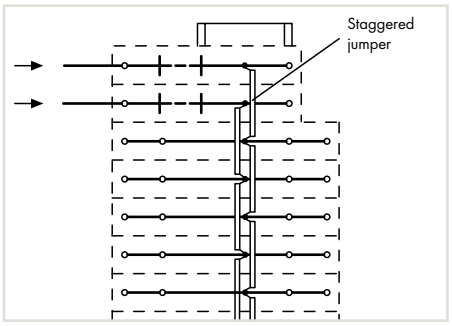

Diagram of the assembly as shown in the picture above.



CAGE CLAMP® terminates the following copper conductors:
solid



stranded



fine-stranded, also with tinned single strands

For aluminum conductors, see notes in Section 14. When using ferrules, the max. conductor cross section accommodated is one size smaller than max. rating of terminal block.

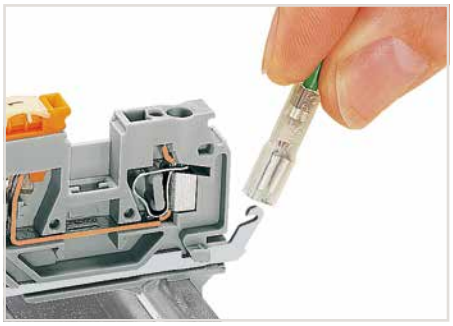

Shield contact via (2.5 x 0.8) mm solder/crimp quick disconnect terminal



Testing with voltage tester.



Terminal block labeling –via WMB (center position) and Mini-WSB markers (on the sides)

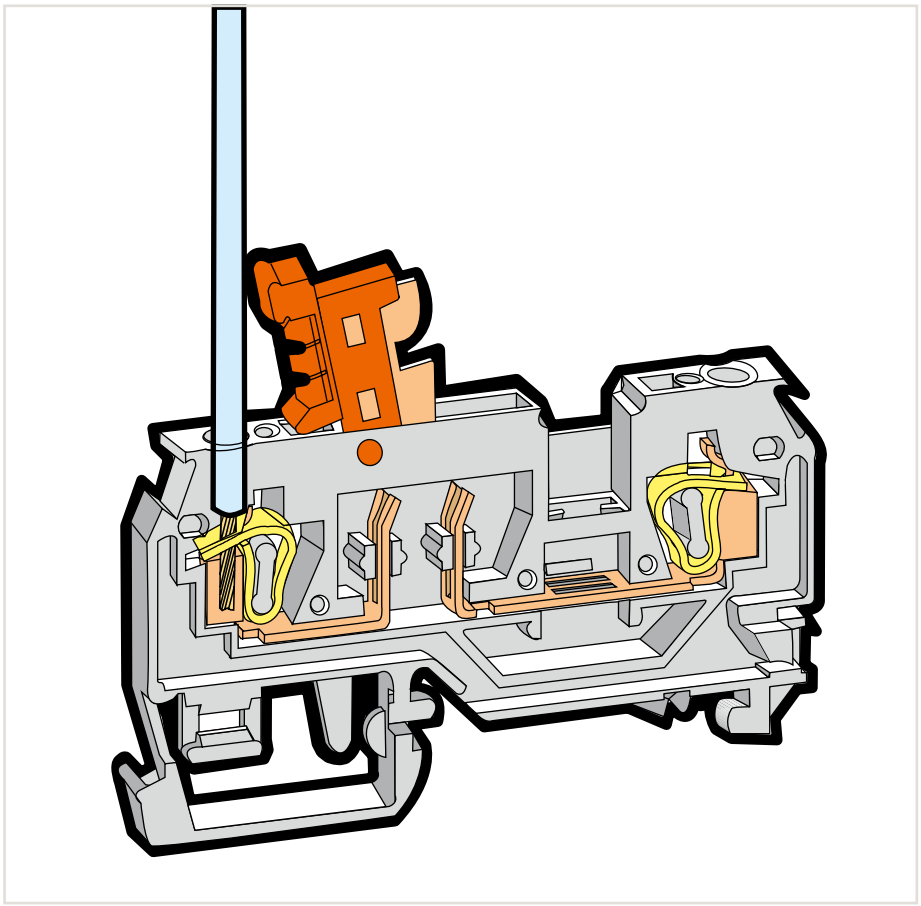



fine-stranded, tip-bonded



fine-stranded, with ferrule (gastight crimped)



fine-stranded, with pin terminal (gastight crimped)

2-Conductor Disconnect/Test Terminal Blocks without/with Shield Contact

2.5 mm², 280 Series

0.08 ... 2.5 mm²	28 ... 12 AWG*
400 V/6 kV/3 ❶	600 V, 15 A
I_N 16 A	300 V, 15 A
Terminal block width 5 mm / 0.197 inch	
8 ... 9 mm / 0.31 ... 0.35 inch	

0.08 ... 2.5 mm²	28 ... 12 AWG*
250 V/4 kV/3 ❶	600 V, 15 A
I_N 16 A	300 V, 15 A
Terminal block width 5 mm / 0.197 inch	
8 ... 9 mm / 0.31 ... 0.35 inch	

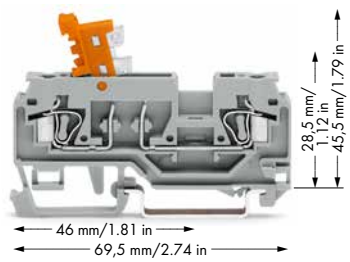

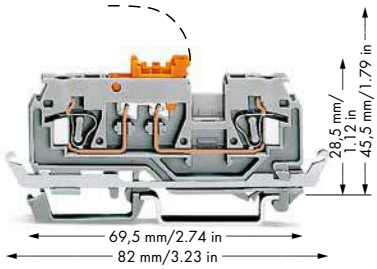

* 12 AWG: THHN, THWN

❶ 400 V/250 V = rated voltage
6 kV/4 kV = rated surge voltage
3 = pollution degree
(see Section 14)

❷ Suitable for Ex i applications

❸ See application notes for:
Insulation stop, page 331
Staggered jumper, page 333
Push-in type wire jumper, page 333
Comb-style jumper bar, page 332
Operating tool, page 332
Test plug modules, page 326
Banana plug, page 330

5

Item No.		Pack. Unit
2-conductor disconnect/test terminal block, with test slots for 2 and 2.3 mm Ø test plugs, with pivoting knife disconnect		
gray terminal block housing		
orange disconnect link		
gray	280-870	100
gray terminal block housing		
gray disconnect link		
gray	280-868	100
blue terminal block housing		
orange disconnect link		
blue	280-876 ❷	100
orange terminal block housing		
orange disconnect link		
orange	280-879	100

Item No.		Pack. Unit
2-conductor disconnect/test terminal block with shield contact, with test slots for 2 and 2.3 mm Ø test plugs, with pivoting knife disconnect		
gray terminal block housing		
orange disconnect link		
gray	280-871	50
gray terminal block housing		
gray disconnect link		
gray	280-869	50
orange terminal block housing		
orange disconnect link		
blue	280-880	50

Accessories

Appropriate marking systems: WMB/WMB Inline/Mini-WSB
(see Section 13)

End and intermediate plate, 2.5 mm thick
- orange 280-371 100 (4x25)
- gray 280-374 100 (4x25)

Insulation stop, 5 pcs/strip, 0.08 ... 0.2 mm² "s" (0.14 mm² "f-st") ❸
- white 280-470 200 (8x25)

Insulation stop, 5 pcs/strip, 0.25 ... 0.5 mm² ❸
- light gray 280-471 200 (8x25)

Insulation stop, 5 pcs/strip, 0.75 ... 1 mm² ❸
- dark gray 280-472

Adjacent jumper, insulated, I_N = I_N terminal block
- gray 280-402 200 (8x25)
- yellow-green 280-422 200 (8x25)

Alternate jumper, insulated, I_N = I_N terminal block
- gray 280-409 100 (4x25)

Protective warning marker, with black high-voltage symbol, for 5 terminal blocks
- yellow 280-415 100 (4x25)

Staggered jumper, insulated, Spacing: 5 mm, I_N 24 A ❸
- from 1 to 2 780-452 100 (4x25)
- from 1 to 3 780-453 100 (4x25)
- from 1 to 4 780-454 100 (4x25)
- from 1 to 5 780-455 50 (2x25)
- from 1 to 6 780-456 50 (2x25)
- from 1 to 7 780-457 50 (2x25)
- from 1 to 8 780-458 50 (2x25)

Push-in type wire jumper, insulated, wire size 0.75 mm², I_N 9 A ❸
- L = 60 mm 249-125 10
- L = 110 mm 249-126 10
- L = 250 mm 249-127 10

Comb-style jumper bar, insulated, I_N = I_N terminal block ❸
- 2-way 280-482 200 (8x25)
- 3-way 280-483 200 (8x25)

Comb-style jumper bar, insulated, I_N = I_N terminal block
- 10-way 280-490 50 (2x25)

Accessories

Alternate comb-style jumper bar, insulated, I_N = I_N terminal block
- 2-way 280-492 200 (8x25)

Operating tool, of insulating material
- 2-way 280-432 1
- 3-way 280-433 1

Operating tool, of insulating material
- 10-way 280-440 1

Test plug module, snaps together, 5 mm wide ❸
- gray 280-418 100 (4x25)

Spacer module, snaps together, 5 mm wide
- gray 280-419 100 (4x25)

Test plug, with 500 mm cable, 2 mm Ø, max. 42 V
- red 210-136 50

Test plug, with 500 mm cable, 2.3 mm Ø, max. 42 V
- yellow 210-137 50

Test plug adapter, 5 mm wide, for 210-137 Test Plug (2.3 mm Ø), for 1.5 ... 4 mm² terminal blocks
- gray 280-404 100 (4x25)

Test plug adapter, 8.3 mm wide, for 4 mm Ø test plug, for 1.5 ... 10 mm² terminal blocks
- gray 209-170 50 (2x25)

Banana plug, for 4 mm socket diameter, color mixed, 10 x ❸
- orange, white, black, blue, yellow 215-111 50

WMB Multi marking system, white, 10 strips with 10 markers per card, 5 ... 5.2 mm stretchable
- plain 793-5501 5

Mini-WSB Quick marking system, white, 10 strips with 10 markers per card, 5 mm wide markers
- plain 248-501 5

Overview of certification organizations, see page 654

4-Conductor Disconnect/Test Terminal Blocks without/with Shield Contact

2.5 mm², 280 Series

0.08 ... 2.5 mm²	28 ... 12 AWG*
400 V/6 kV/3 ❶	600 V, 15 A
I_N 16 A	300 V, 15 A
Terminal block width 5 mm / 0.197 inch	
8 ... 9 mm / 0.31 ... 0.35 inch	

0.08 ... 2.5 mm²	28 ... 12 AWG*
250 V/4 kV/3 ❶	600 V, 15 A
I_N 16 A	300 V, 15 A
Terminal block width 5 mm / 0.197 inch	
8 ... 9 mm / 0.31 ... 0.35 inch	

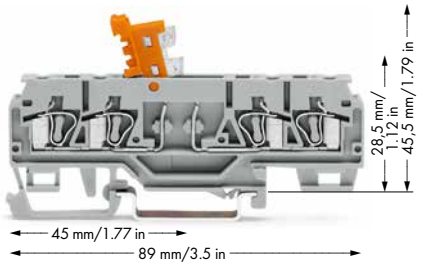

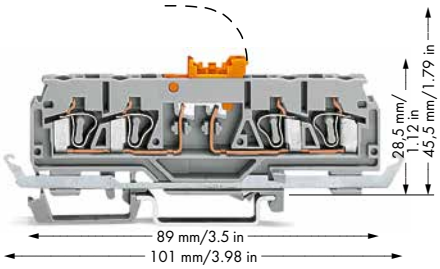

* 12 AWG: THHN, THWN

❶ 400 V/250 V = rated voltage
6 kV/4 kV = rated surge voltage
3 = pollution degree
(see Section 14)

❷ Suitable for Ex i applications

❸ See application notes for:
Insulation stop, page 331
Comb-style jumper bar, page 332
Operating tool, page 332

	Item No.	Pack. Unit
4-conductor disconnect/test terminal block, with test slots for 2 and 2.3 mm Ø test plugs, with pivoting knife disconnect		
gray terminal block housing		
orange disconnect link		
gray	**280-874**	50
gray terminal block housing		
gray disconnect link		
gray	**280-881**	50
blue terminal block housing		
orange disconnect link		
blue	**280-885** ❷	50
orange terminal block housing		
orange disconnect link		
orange	**280-883**	50

	Item No.	Pack. Unit
4-conductor disconnect/test terminal block with shield contact, with test slots for 2 and 2.3 mm Ø test plugs, with pivoting knife disconnect		
gray terminal block housing		
orange disconnect link		
gray	**280-875**	50
gray terminal block housing		
gray disconnect link		
gray	**280-882**	50
orange terminal block housing		
orange disconnect link		
blue	**280-884**	50

Accessories

Appropriate marking systems: WMB/WMB Inline/Mini-WSB
(see Section 13)

End and intermediate plate, 2.5 mm thick			
	orange	**280-373**	100 (4x25)
	gray	**280-376**	100 (4x25)
Insulation stop, 5 pcs/strip, 0.08 ... 0.2 mm² "s" (0.14 mm² "f-st") ❸			
	white	**280-470**	200 (8x25)
Insulation stop, 5 pcs/strip, 0.25 ... 0.5 mm² ❸			
	light gray	**280-471**	200 (8x25)
Insulation stop, 5 pcs/strip, 0.75 ... 1 mm² ❸			
	dark gray	**280-472**	200 (8x25)
Comb-style jumper bar, insulated, I_N = I_N terminal block ❸			
	2-way	**280-482**	200 (8x25)
	3-way	**280-483**	200 (8x25)
Comb-style jumper bar, insulated, I_N = I_N terminal block			
	10-way	**280-490**	50 (2x25)
Alternate comb-style jumper bar, insulated, I_N = I_N terminal block			
	2-way	**280-492**	200 (8x25)

Operating tool, of insulating material			
	2-way	**280-432**	1
	3-way	**280-433**	1
Operating tool, of insulating material			
	10-way	**280-440**	1
Protective warning marker, with black high-voltage symbol, for 5 terminal blocks			
	yellow	**280-415**	100 (4x25)
Test plug, with 500 mm cable, 2 mm Ø, max. 42 V			
	red	**210-136**	50
Test plug, with 500 mm cable, 2.3 mm Ø, max. 42 V			
	yellow	**210-137**	50
Screwless end stop, for DIN-35 rail, 6 mm wide			
	gray	**249-116**	100 (4x25)
Screwless end stop, for DIN-35 rail, 10 mm wide			
	gray	**249-117**	50 (2x25)

Disconnect/Test Terminal Blocks

2.5 mm², 280 Series

0.08 … 2.5 mm²	28 … 12 AWG*	
400 V/6 kV/3 ❶	300 V, 15 A	
I_N 10 A	300 V, 15 A	
Terminal block width 5 mm / 0.197 inch		
8 … 9 mm / 0.31 … 0.35 inch		

0.08 … 2.5 mm²	28 … 12 AWG*	
400 V/6 kV/3 ❶	300 V, 15 A	
I_N 10 A	600 V, 15 A	
Terminal block width 5 mm / 0.197 inch		
8 … 9 mm / 0.31 … 0.35 inch		

0.08 … 2.5 mm²	28 … 12 AWG*	
400 V/6 kV/3 ❶	300 V, 15 A	
I_N 10 A	600 V, 15 A	
Terminal block width 5 mm / 0.197 inch		
8 … 9 mm / 0.31 … 0.35 inch		

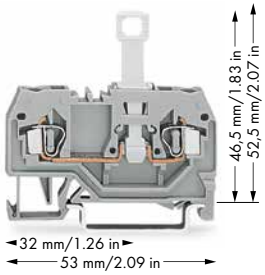

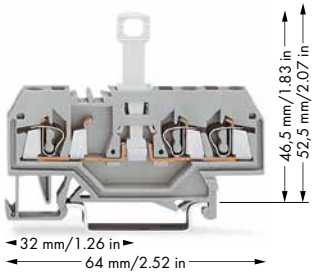

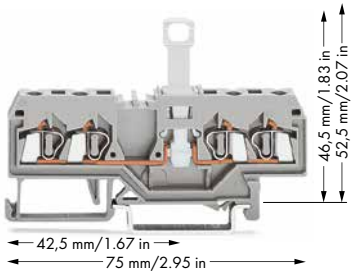

5

	Item No.	Pack. Unit
2-conductor disconnect terminal block, with disconnect tab		
gray	**280-912**	50
blue	**280-914**	50
orange	**280-913**	50
Other terminal blocks with the same profile:		
Through	**280-901**	Page 220

	Item No.	Pack. Unit
3-conductor disconnect terminal block, with disconnect tab		
gray	**280-683**	50
Other terminal blocks with the same profile:		
Through	**280-681**	Page 220

	Item No.	Pack. Unit
4-conductor disconnect terminal block, with disconnect tab		
gray	**280-836**	50
blue	**280-839**	50
orange	**280-805**	50
Other terminal blocks with the same profile:		
Through	**280-833**	Page 220

Item-Specific Accessories

		Item No.	Pack. Unit
End and intermediate plate, 2.5 mm thick			
	orange	**280-309**	100 (4x25)
	gray	**280-308**	100 (4x25)
	light gray	**280-356**	100 (4x25)
Separator, oversized, 2 mm thick			
	orange	**280-311**	100 (4x25)
	gray	**280-310**	100 (4x25)
	light gray	**280-357**	100 (4x25)

Item-Specific Accessories

		Item No.	Pack. Unit
End and intermediate plate, 2.5 mm thick			
	orange	**280-326**	100 (4x25)
	gray	**280-324**	100 (4x25)
	light gray	**280-358**	100 (4x25)
Separator, oversized, 2 mm thick			
	orange	**280-346**	100 (4x25)
	gray	**280-344**	100 (4x25)
	light gray	**280-359**	100 (4x25)

Item-Specific Accessories

		Item No.	Pack. Unit
End and intermediate plate, 2.5 mm thick			
	orange	**280-315**	100 (4x25)
	gray	**280-314**	100 (4x25)
	light gray	**280-352**	100 (4x25)
Separator, oversized, 2 mm thick			
	orange	**280-335**	100 (4x25)
	gray	**280-334**	100 (4x25)
	light gray	**280-353**	100 (4x25)

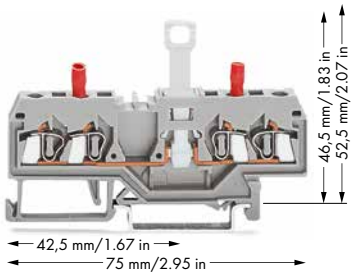

	Item No.	Pack. Unit
2-conductor disconnect/test terminal block, with disconnect tab, with integrated test sockets		
gray	**280-829**	50

Item-Specific Accessories

		Item No.	Pack. Unit
End and intermediate plate, 2.5 mm thick			
	orange	**280-315**	100 (4x25)
	gray	**280-314**	100 (4x25)
	light gray	**280-352**	100 (4x25)
Separator, oversized, 2 mm thick			
	orange	**280-335**	100 (4x25)
	gray	**280-334**	100 (4x25)
	light gray	**280-353**	100 (4x25)

Disconnect/Test Terminal Blocks

Installation

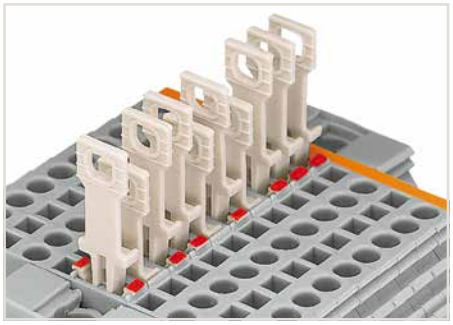

Disconnect terminal block with colored tab to indicate the switching status (red = disconnected)



Commoning front-entry disconnect terminal blocks via comb-style jumper bar using a 10-pole operating tool.

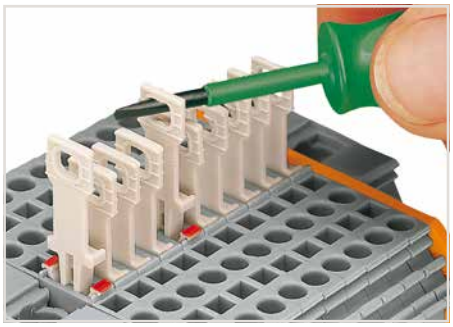

Pulling the disconnect tab via operating tool.



Pulling the disconnect tab by hand.

❶ 400 V = rated voltage
6 kV = rated surge voltage
3 = pollution degree
(see Section 14)

❷ See application notes for:
Insulation stop, page 331
Comb-style jumper bar, page 332
Operating tool, page 332

5

280 Series Accessories

Appropriate marking systems (see Section 13)

Insulation stop, 5 pcs/strip, 0.08 ... 0.2 mm² "s" (0.14 mm² "f-st") ❷			
	white	**280-470**	200 (8x25)
Insulation stop, 5 pcs/strip, 0.25 ... 0.5 mm² ❷			
	light gray	**280-471**	200 (8x25)
Insulation stop, 5 pcs/strip, 0.75 ... 1 mm² ❷			
	dark gray	**280-472**	200 (8x25)
Comb-style jumper bar, insulated, I_N = I_N terminal block ❷			
	2-way	**280-482**	200 (8x25)
	3-way	**280-483**	200 (8x25)
Alternate comb-style jumper bar, insulated, I_N = I_N terminal block			
	2-way	**280-492**	200 (8x25)
Operating tool, of insulating material			
	2-way	**280-432**	1
	3-way	**280-433**	1
Protective warning marker, with black high-voltage symbol, for 5 terminal blocks			
	yellow	**280-415**	100 (4x25)
Disconnect lock, for disconnect tab used on disconnect terminal blocks (280/281 and 769 Series)			
	red	**709-170**	200 (8x25)
Test socket, insulated, 2 mm Ø			
	red	**209-107**	100 (2x50)
Test socket, insulated, 2.3 mm Ø			
	yellow	**209-108**	100 (2x50)
Test plug, with 500 mm cable, 2 mm Ø, max. 42 V			
	red	**210-136**	50
Test plug, with 500 mm cable, 2.3 mm Ø, max. 42 V			
	yellow	**210-137**	50

Disconnect/Test Terminal Blocks

4 mm², 281 Series

0.08 … 4 mm²	28 … 12 AWG	
400 V/6 kV/3 ❶	300 V, 15 A	
I_N 10 A	300 V, 15 A	
Terminal block width 6 mm / 0.236 inch		
9 … 10 mm / 0.35 … 0.39 inch		

0.08 … 4 mm²	28 … 12 AWG	
400 V/6 kV/3 ❶	300 V, 15 A	
I_N 10 A	600 V, 15 A	
Terminal block width 6 mm / 0.236 inch		
9 … 10 mm / 0.35 … 0.39 inch		

0.08 … 4 mm²	28 … 12 AWG	
400 V/6 kV/3 ❶	300 V, 15 A	
I_N 10 A	600 V, 15 A	
Terminal block width 6 mm / 0.236 inch		
9 … 10 mm / 0.35 … 0.39 inch		

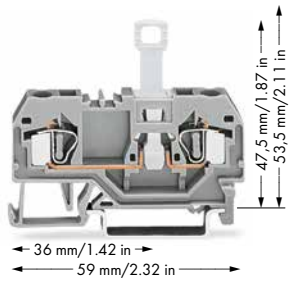

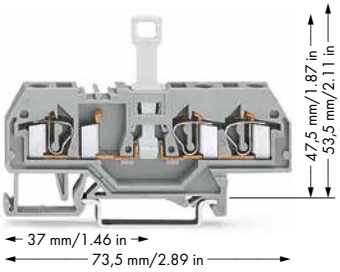

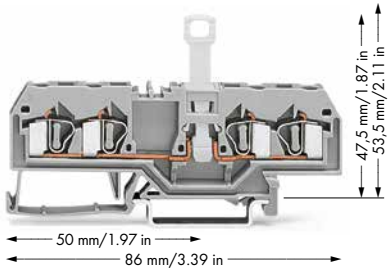

5

	Item No.	Pack. Unit
2-conductor disconnect terminal block, with disconnect tab		
gray	**281-912**	50
Other terminal blocks with the same profile:		
Through	**281-901**	Page 226

	Item No.	Pack. Unit
3-conductor disconnect terminal block, with disconnect tab		
gray	**281-683**	50
Other terminal blocks with the same profile:		
Through	**281-681**	Page 226

	Item No.	Pack. Unit
4-conductor disconnect terminal block, with disconnect tab		
gray	**281-659**	50
blue	**281-660**	50
Other terminal blocks with the same profile:		
Through	**281-652**	Page 226

Item-Specific Accessories

End and intermediate plate, 2.5 mm thick			
	orange	**281-329**	100 (4x25)
	gray	**281-328**	100 (4x25)
	light gray	**281-349**	100 (4x25)
Separator, oversized, 2 mm thick			
	orange	**281-331**	100 (4x25)
	gray	**281-330**	100 (4x25)
	light gray	**281-350**	100 (4x25)

Item-Specific Accessories

End and intermediate plate, 2.5 mm thick			
	orange	**281-326**	100 (4x25)
	gray	**281-324**	100 (4x25)
	light gray	**281-355**	100 (4x25)
Separator, oversized, 2 mm thick			
	orange	**281-346**	100 (4x25)
	gray	**281-344**	100 (4x25)
	light gray	**281-356**	100 (4x25)

Item-Specific Accessories

End and intermediate plate, 2.5 mm thick			
	orange	**281-335**	100 (4x25)
	gray	**281-334**	100 (4x25)
	light gray	**281-345**	100 (4x25)
Separator, oversized, 2 mm thick			
	orange	**281-339**	100 (4x25)
	gray	**281-338**	100 (4x25)
	light gray	**281-347**	100 (4x25)

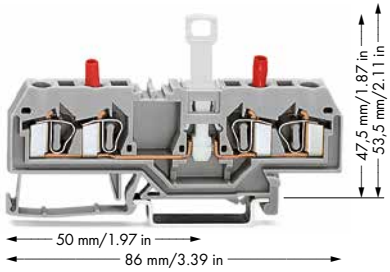

	Item No.	Pack. Unit
2-conductor disconnect/test terminal block, with disconnect tab, with integrated test sockets		
gray	**281-666**	50

Item-Specific Accessories

End and intermediate plate, 2.5 mm thick			
	orange	**281-335**	100 (4x25)
	gray	**281-334**	100 (4x25)
	light gray	**281-345**	100 (4x25)
Separator, oversized, 2 mm thick			
	orange	**281-339**	100 (4x25)
	gray	**281-338**	100 (4x25)
	light gray	**281-347**	100 (4x25)

Overview of certification organizations, see page 654

Disconnect/Test Terminal Blocks

Installation

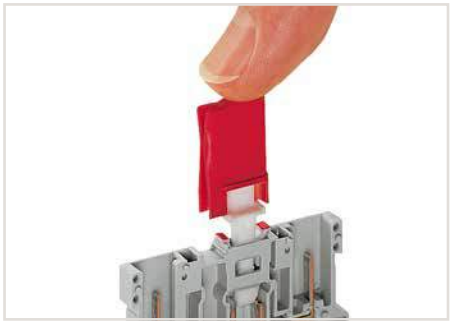

Installing a disconnect lock on the terminal block's disconnect tab (the picture shows a 769 Series 2-pin-disconnect terminal block).

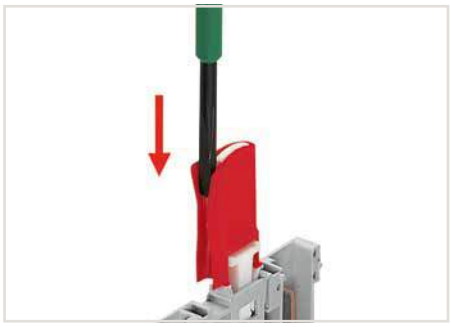

Unlocking a disconnect lock.

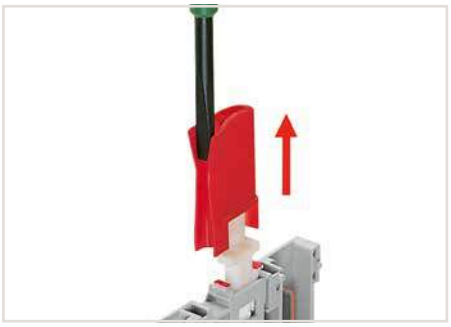

Removing a disconnect lock.

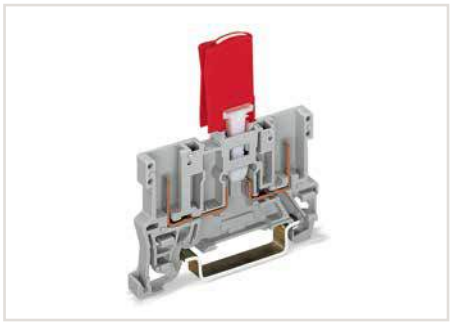

Double Safety:
The disconnect tab has been designed for maximum operational safety.

As soon as the disconnect tab is in the disconnect position, it can be protected against unintentional reconnection by using the disconnect lock.
Only through intentional and focused use of a tool, can the disconnect lock be removed and the circuit reconnected.

Features/Benefits:
- Easy to use
- Install/remove disconnect lock with just one hand
- Clearly identify disconnect tab position
- Higher safety
- Intentional effort is required to reconnect the circuit

❶ 400 V = rated voltage
6 kV = rated surge voltage
3 = pollution degree
(see Section 14)

❷ See application notes for:
Insulation stop, page 331
Comb-style jumper bar, page 332
Operating tool, page 332

5

281 Series Accessories

Appropriate marking systems (see Section 13)

Insulation stop, 5 pcs/strip, 0.08 ... 0.2 mm² "s" (0.14 mm² "f-st") ❷			
	white	**281-470**	200 (8x25)
Insulation stop, 5 pcs/strip, 0.25 ... 0.5 mm² ❷			
	light gray	**281-471**	200 (8x25)
Insulation stop, 5 pcs/strip, 0.25 ... 1.5 mm² ❷			
	dark gray	**281-472**	200 (8x25)
Comb-style jumper bar, insulated, I_N = I_N terminal block ❷			
	2-way	**281-482**	100 (4x25)
	3-way	**281-483**	100 (4x25)
Alternate comb-style jumper bar, insulated, I_N = I_N terminal block			
	2-way	**281-492**	100 (4x25)
Operating tool, of insulating material			
	2-way	**280-432**	1
	3-way	**280-433**	1
Protective warning marker, with black high-voltage symbol, for 5 terminal blocks			
	yellow	**281-415**	100 (4x25)
Disconnect lock, for disconnect tab used on disconnect terminal blocks (280/281 and 769 Series)			
	red	**709-170**	200 (8x25)
Test socket, insulated, 2 mm Ø			
	red	**209-107**	100 (2x50)
Test socket, insulated, 2.3 mm Ø			
	yellow	**209-108**	100 (2x50)
Test plug, with 500 mm cable, 2 mm Ø, max. 42 V			
	red	**210-136**	50
Test plug, with 500 mm cable, 2.3 mm Ø, max. 42 V			
	yellow	**210-137**	50

Disconnect/Test Terminal Blocks for Transformer Circuits, 282 Series

Description and Installation



Inserting insulated, touch-proof adjacent jumpers into the protected shorting position.



Terminal strip permanently prepared for current transformer circuits.

5

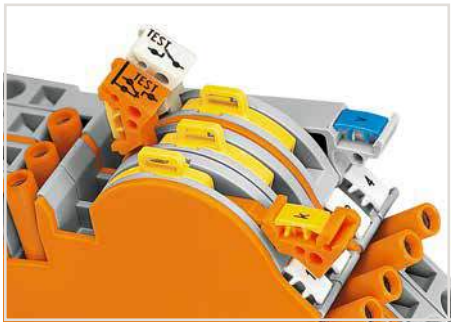

Lock-out snaps into one of two notched positions, preventing accidental operation of the disconnect link.

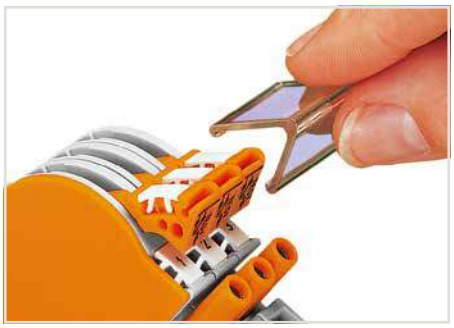

Snapping a transparent locking cover onto 1–8 disconnect links:
a) Mechanically lock several links for multi-pole switching applications
b) Protect markers

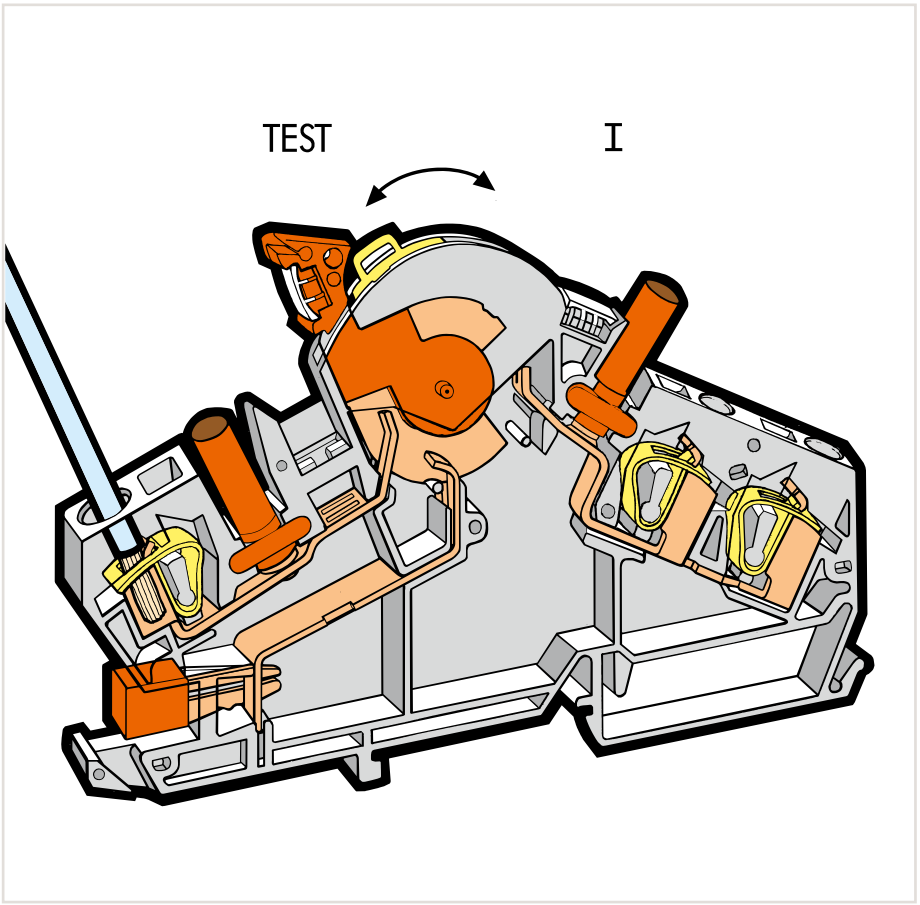



Interlocking link mechanically locks multiple links for multi-pole switching applications.

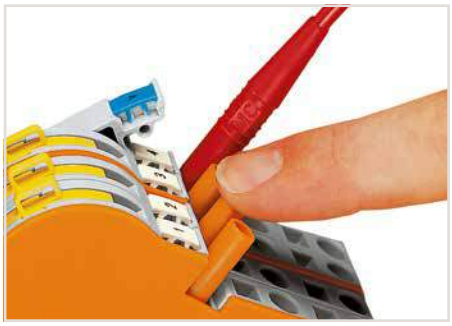

Touch-proof test sockets for touch-proof 4 mm Ø test plugs (not available from WAGO, but are offered by industry suppliers such as, Fabrikat Multi-Contact)

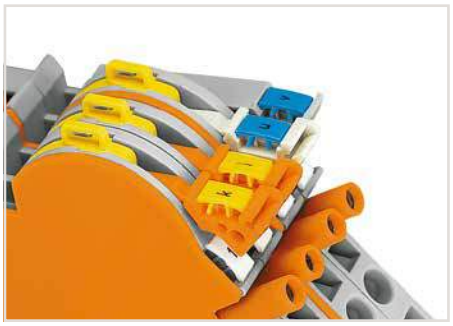

Labeling via WMB Multi Marking System.
For other systems, see Section 13.



CAGE CLAMP® terminates the following copper conductors:
solid



stranded



fine-stranded, also with tinned single strands

For aluminum conductors, see notes in Section 14. When using ferrules, the max. conductor cross section accommodated is one size smaller than max. rating of terminal block.

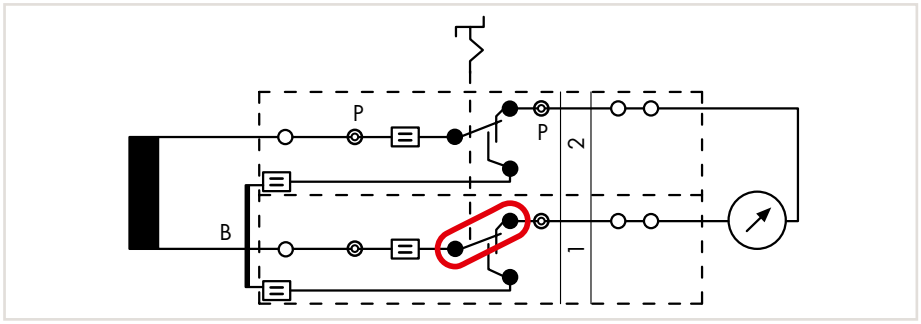

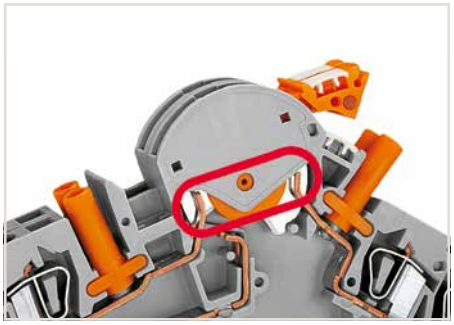

Disconnect link in notched "I" position
In "I" operating position, the measurement device is connected to the transformer.

B = shorting jumper, P = test socket

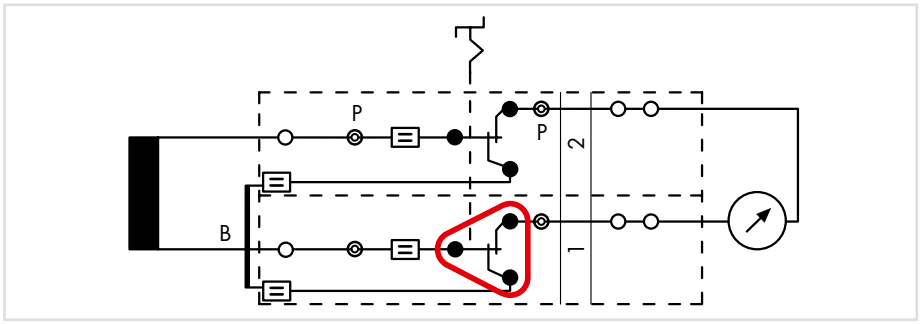

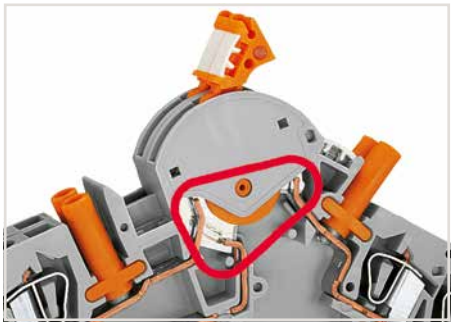

Disconnect link in transition from "I" to "TEST" (terminal blocks 1 + 2)
The transformer is not disconnected from the measurement device, yet the shorting path is activated by moving the disconnect link from "I" to "TEST."

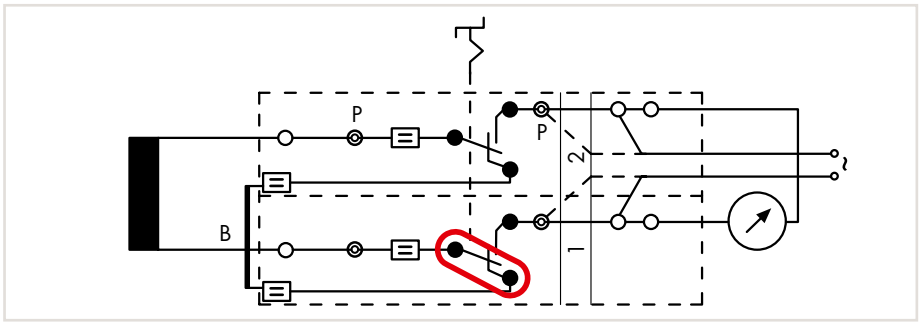

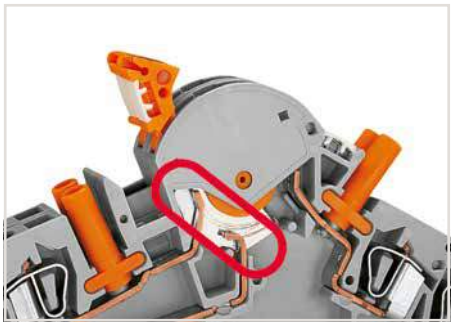

Disconnect link in notched "TEST" position (terminal blocks 1 + 2)
The measurement device/relay is electrically disconnected from the transformer. If required, external voltage can be applied to the measurement device/relay via the test socket, or the 2nd CAGE CLAMP® connection.

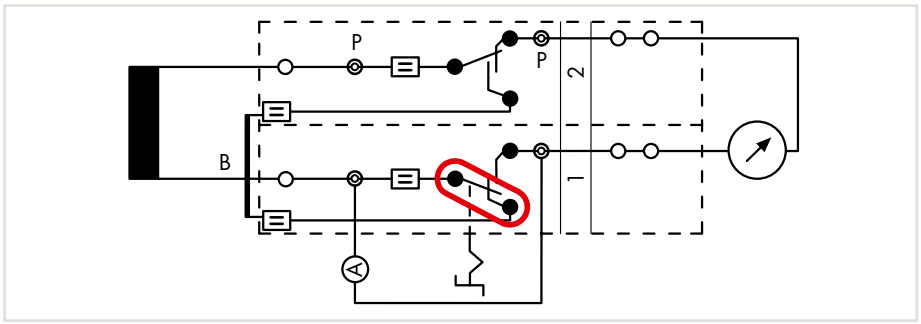

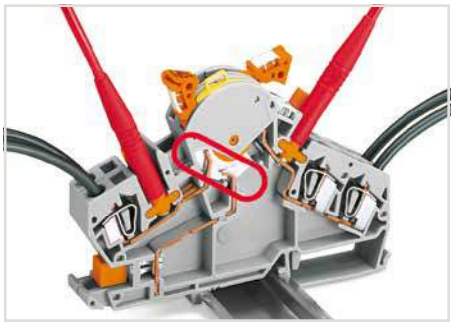

Disconnect link in notched "I" position (terminal block 2)
Disconnect link in notched "TEST" position (terminal block 1) – measurement testing
Before moving the disconnect link of terminal block 1 into the notched "TEST" position, the reference current meter must be inserted into the test socket of terminal block 1.



fine-stranded,
tip-bonded



fine-stranded,
with ferrule
(gastight crimped)



fine-stranded,
with pin terminal
(gastight crimped)

Circuit Configuration Examples

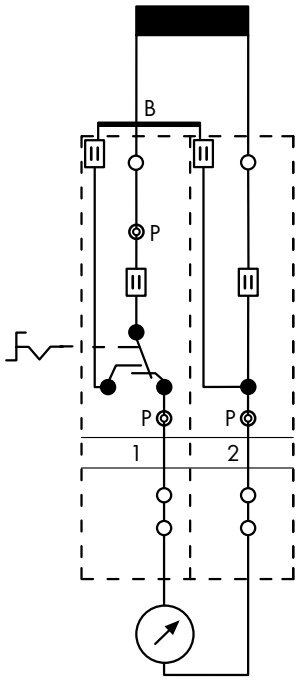

Measuring set for a single-phase current transformer (without measurement testing)



Terminal blocks required:
1 x disconnect/test terminal block (282-870)
1 x through terminal block (282-865)
1 x jumper, orange (282-424)
1 x end plate, orange (282-386)
In addition: locking cover, lock-out

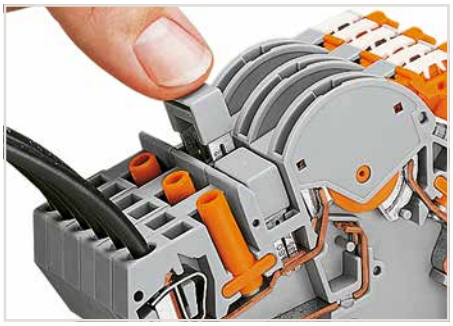

Additional commoning possible with circuit-related adjacent jumpers or testing option via test plug adapter (209-170) on transformer side.

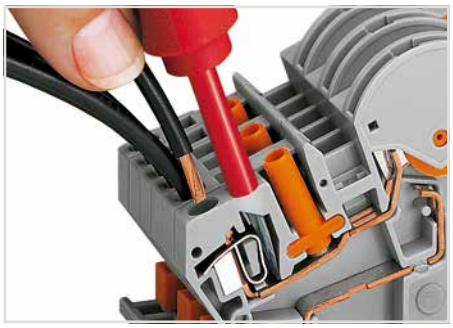

CAGE CLAMP® connection
Inserting a conductor via operating tool (5.5 x 0.8 mm blade).

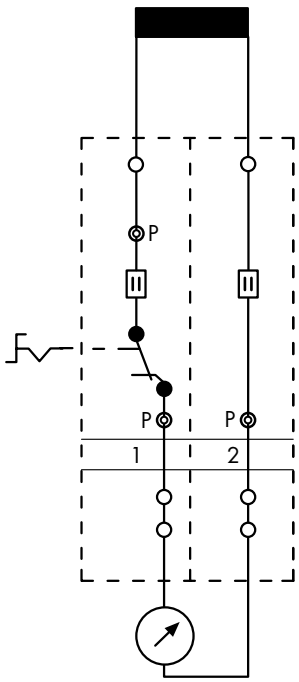

Measuring set for a single-phase voltage transformer



Terminal blocks required:
1 x disconnect/test terminal block (282-860)
1 x through terminal block (282-866)
1 x end plate, orange (282-386)
In addition: locking cover, lock-out



A lock-out seal can be used on the disconnect link in notched "I" position.



Additional CAGE CLAMP® connection on the measurement device side, e.g., when connecting wire commoning chains or applying an external voltage.

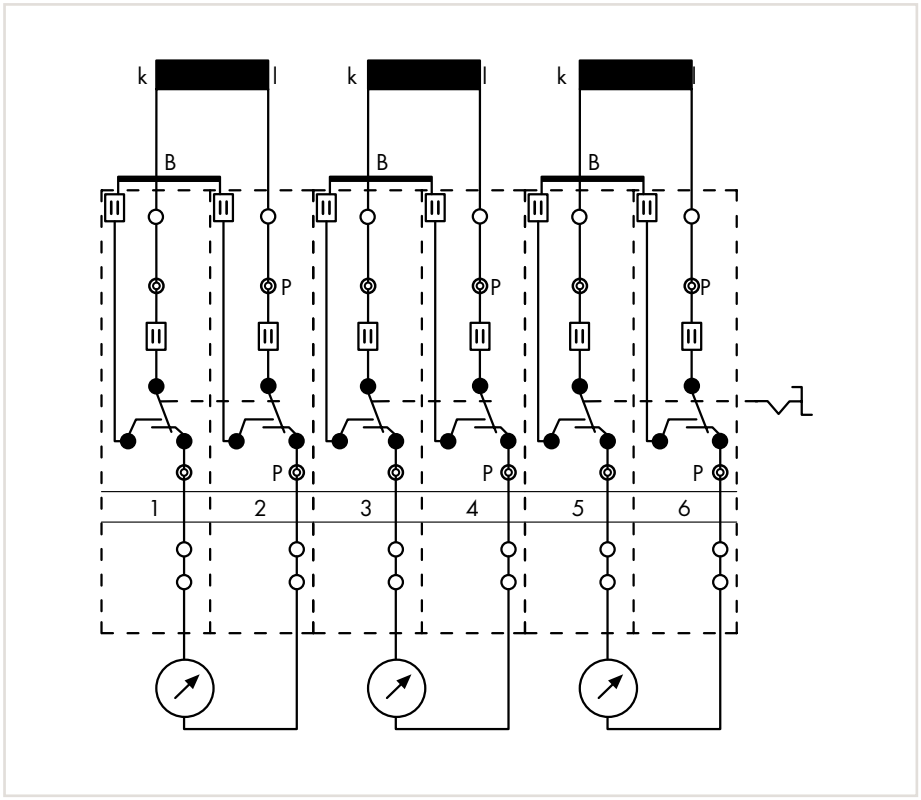

Measuring set for a three-phase current transformer
Pairs of disconnect links are interconnected via interlocking link or locking cover.
Measurement testing is performed after the interlocking is released.

B = shorting jumper, P = test socket

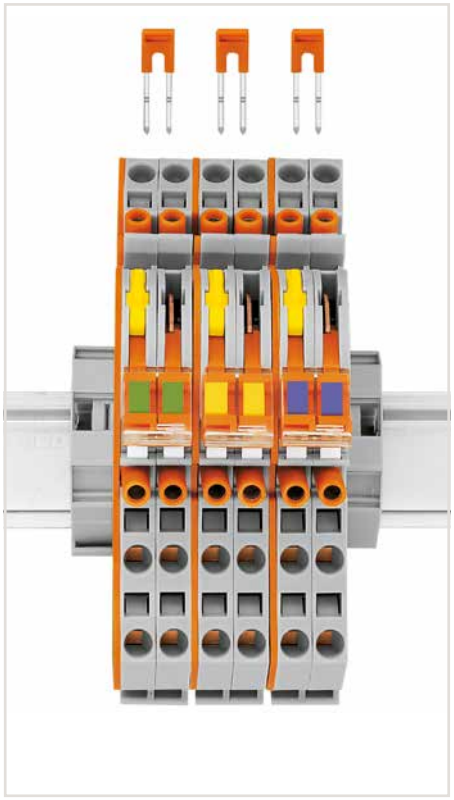

Terminal blocks required:
6 x disconnect/test terminal block (282-870)
3 x jumper, orange (282-424)
3 x end plate, orange (282-386)
In addition: interlocking link, locking cover, lock-out

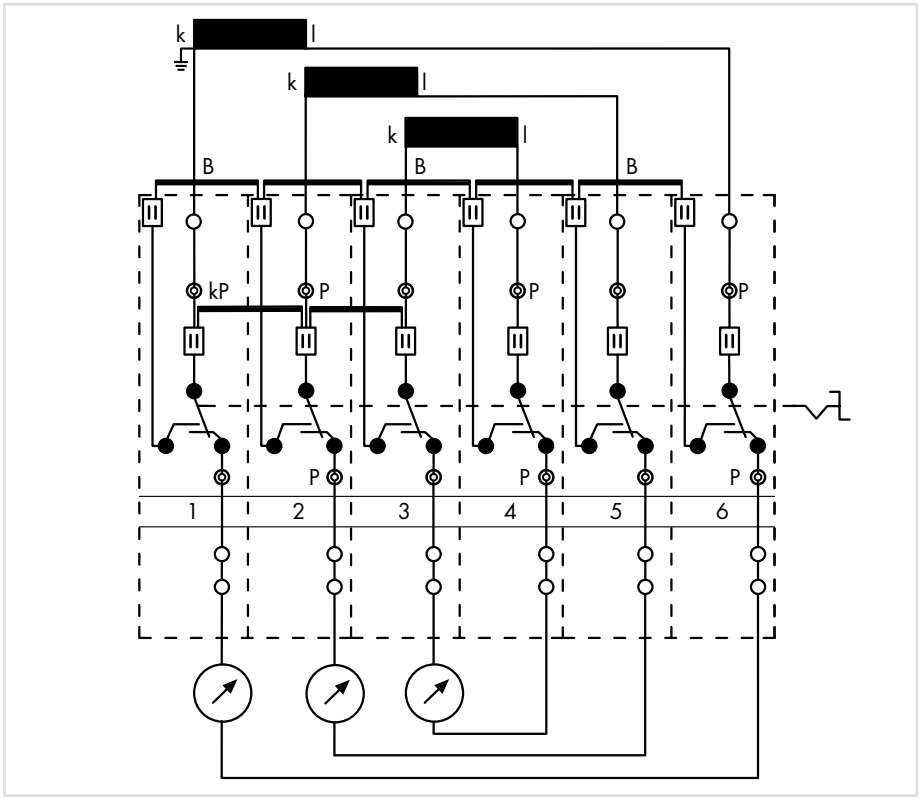

Measuring set for a three-phase current transformer with 'Y' point
All six disconnect links are interconnected via interlocking link.

kP = 'Y' point jumper

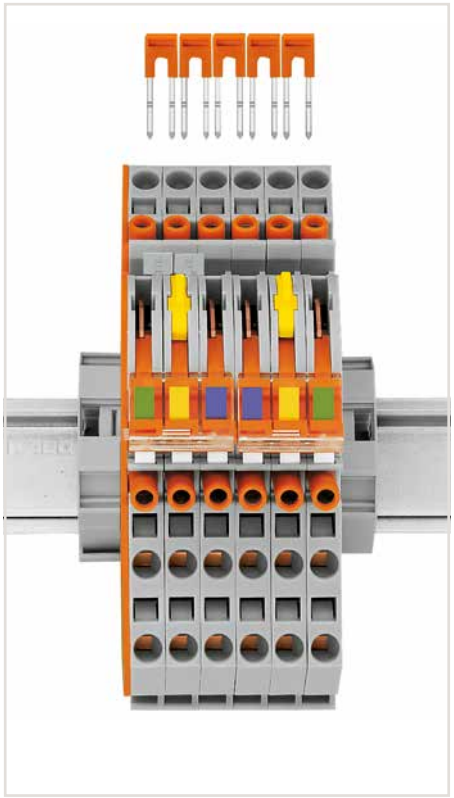

Terminal blocks required:
6 x disconnect/test terminal block (282-870)
5 x jumper, orange (282-424)
2 x jumper, gray (282-402)
1 x end plate, orange (282-386)
In addition: interlocking link, locking cover, lock-out

Disconnect/Test Terminal Blocks, 30 A, Through Terminal Blocks for Current and Voltage Transformer Circuits

6 mm², 282 Series

0.2 … 6 mm²	24 … 10 AWG	
500 V/6 kV/3 ❶	600 V, 30 A	
I_N 30 A	300 V, 5 A	
Terminal block width 8 mm / 0.315 inch		
12 … 13 mm / 0.47 … 0.51 inch		

0.2 … 6 mm²	24 … 10 AWG	
500 V/6 kV/3 ❶	600 V, 30 A	
I_N 30 A	300 V, 5 A	
Terminal block width 8 mm / 0.315 inch		
12 … 13 mm / 0.47 … 0.51 inch		

0.2 … 6 mm²	24 … 10 AWG	
500 V/6 kV/3 ❶	600 V, 30 A	
I_N 30 A	300 V, 5 A	
Terminal block width 8 mm / 0.315 inch		
12 … 13 mm / 0.47 … 0.51 inch		

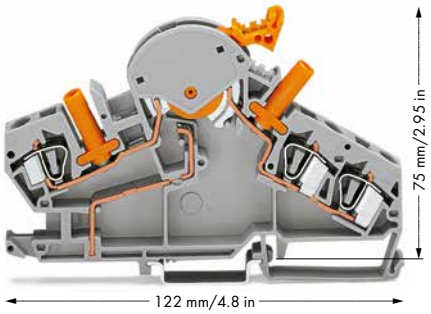

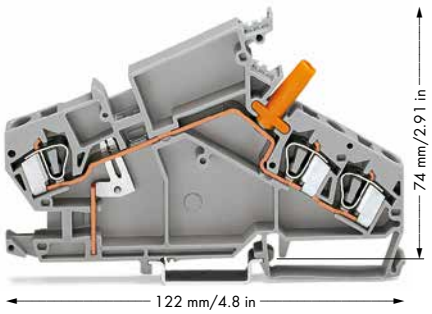

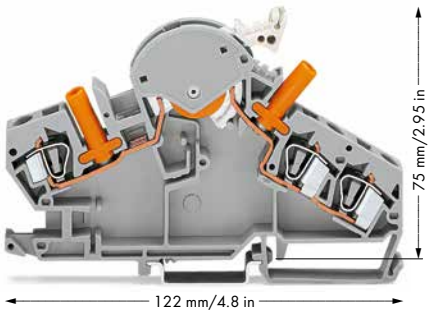

5

Item No.		Pack. Unit
Disconnect/test terminal block, with touch-proof test sockets, for 4 mm Ø test plugs, e.g., for current transformer circuits, orange disconnect link		
◯ gray	282-870 ❷ ❸	20

Item No.		Pack. Unit
Through terminal block, with touch-proof test socket, for 4 mm Ø test plugs, e.g., for current transformer circuits		
◯ gray	282-865 ❸	20

Item No.		Pack. Unit
Disconnect/test terminal block, with touch-proof test sockets, for 4 mm Ø test plugs, e.g., for voltage transformer circuits, disconnect link, light gray		
◯ gray	282-860 ❷ ❸	20

Item-Specific Accessories

End and separator plate, 1.5 mm thick, without lock-out seal option			
orange	282-386	50 (5x10)	
gray	282-391	50 (5x10)	
End and separator plate, 1.5 mm thick, with lock-out seal option			
orange	282-387	50 (5x10)	
gray	282-392	50 (5x10)	
Lock-out, for disconnect link			
yellow	282-384	100 (5x20)	
Locking cover, mechanically locks multiple links, transparent			
1-pole	282-881	50 (5x10)	
2-pole	282-882	50 (5x10)	
3-pole	282-883	50 (5x10)	
4-pole	282-884	50 (5x10)	
5-pole	282-885	50 (5x10)	
6-pole	282-886	50 (5x10)	
7-pole	282-887	50 (5x10)	
8-pole	282-888	50 (5x10)	
Interlocking link, mechanically locks multiple links, 1 m long			
transparent	210-254	1	
Adjacent jumper, insulated, I_N 41 A			
orange	282-424	100 (4x25)	
WMB Multi marking system, 10 strips with 10 markers per card, for terminal widths 5 … 17.5 mm, yellow			
k/l (50x)	794-5553/000-002	5	

Item-Specific Accessories

End and separator plate, 1.5 mm thick			
orange	282-385	50 (5x10)	
gray	282-390	50 (5x10)	
WMB Multi marking system, 10 strips with 10 markers per card, for terminal widths 5 … 17.5 mm, yellow			
k/l (50x)	794-5553/000-002	5	

Item-Specific Accessories

End and separator plate, 1.5 mm thick, without lock-out seal option			
orange	282-386	50 (5x10)	
gray	282-391	50 (5x10)	
End and separator plate, 1.5 mm thick, with lock-out seal option			
orange	282-387	50 (5x10)	
gray	282-392	50 (5x10)	
Lock-out, for disconnect link			
yellow	282-384	100 (5x20)	
Locking cover, mechanically locks multiple links, transparent			
1-pole	282-881	50 (5x10)	
2-pole	282-882	50 (5x10)	
3-pole	282-883	50 (5x10)	
4-pole	282-884	50 (5x10)	
5-pole	282-885	50 (5x10)	
6-pole	282-886	50 (5x10)	
7-pole	282-887	50 (5x10)	
8-pole	282-888	50 (5x10)	
Interlocking link, mechanically locks multiple links, 1 m long			
transparent	210-254	1	
WMB Multi marking system, 10 strips with 10 markers per card, for terminal widths 5 … 17.5 mm, blue			
U/V (50x)	794-5554/000-006	5	

Overview of certification organizations, see page 654

0.2 ... 6 mm²	24 ... 10 AWG
500 V/6 kV/3 ❶	600 V, 30 A
I_N 30 A	300 V, 5 A

Terminal block width 8 mm / 0.315 inch
12 ... 13 mm / 0.47 ... 0.51 inch

0.2 ... 6 mm²	24 ... 10 AWG

Terminal block width 8 mm / 0.315 inch
12 ... 13 mm / 0.47 ... 0.51 inch

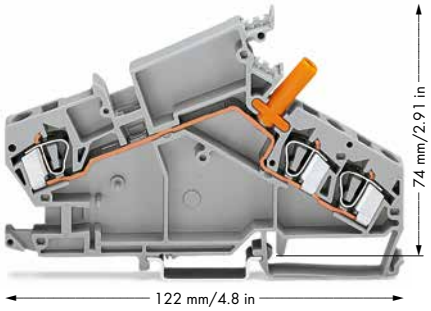

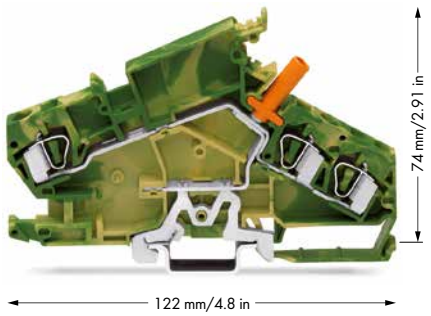

❶ 500 V = rated voltage
6 kV = rated surge voltage
3 = pollution degree
(see Section 14)

❷ 92 mm / 3.62 inch max. height when rotating the disconnect link (incl. locking cover)

❸ For operating stickers, please refer to our online catalog:
for 282-870 (Item No. 210-412)
for 282-865 (Item No. 210-415)
for 282-860 (Item No. 210-414)
for 282-866 (Item No. 210-413)

	Item No.	Pack. Unit
Through terminal block, with touch-proof test socket, for 4 mm Ø test plugs, e.g., for voltage transformer circuits		
gray	**282-866** ❸	20

Item-Specific Accessories

End and separator plate, 1.5 mm thick



orange	**282-385**	50 (5x10)
gray	**282-390**	50 (5x10)

WMB Multi marking system, 10 strips with 10 markers per card, for terminal widths 5 ... 17.5 mm, blue



U/V (50x) **794-5554/000-006** 5

	Item No.	Pack. Unit
Ground conductor terminal block, with touch-proof test socket, for 4 mm Ø test plugs, e.g., for voltage transformer circuits		
green-yellow	**282-868** ❸	20

Item-Specific Accessories

End and separator plate, 1.5 mm thick



orange	**282-385**	50 (5x10)
gray	**282-390**	50 (5x10)

282 Series Accessories

Appropriate marking systems (see Section 13)

Adjacent jumper, insulated, I_N 41 A



gray **282-402** 100 (4x25)

Alternate jumper, insulated, I_N 41 A



gray **282-409** 100 (4x25)

Protective warning marker, with black high-voltage symbol, for 5 terminal blocks



yellow **282-415** 100 (4x25)

Wire commoning chain, insulated, 4 connections, 3 x 110 mm, I_N 24 A



black **709-110** 1

Wire commoning chain, insulated, 3 connections, 2 x 120 mm, I_N 24 A



black **709-111** 1

Wire commoning chain, insulated, 3 connections, 2 x 170 mm, I_N 24 A



black **709-112** 1

Group marker carrier, angled, e.g., for transformer terminal blocks (282 Series)



gray **209-144** 50 (2x25)

WMB Multi marking system, white, 10 strips with 10 markers per card, for terminal widths 5 ... 17.5 mm

plain **793-501** 5

WMB Multi marking system, plain, 10 strips with 10 markers per card, for terminal widths 5 ... 17.5 mm



yellow	**793-501/000-002**
red	**793-501/000-005**
blue	**793-501/000-006**
gray	**793-501/000-007**
orange	**793-501/000-012**
light green	**793-501/000-017**
green	**793-501/000-023**
violet	**793-501/000-024**

5

CAGE CLAMP®

Transverse Switching Terminal Blocks and Longitudinal Switching Disconnect Terminal Blocks, 282 Series

Description and Installation



Transverse switching terminal blocks
Left: Adjacent jumper for commoning of switching lever
Right: Commoning with orange jumper

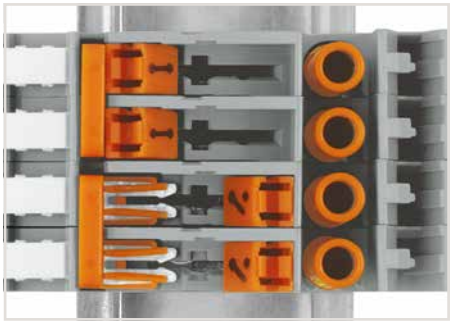

Left: closed
Right: open

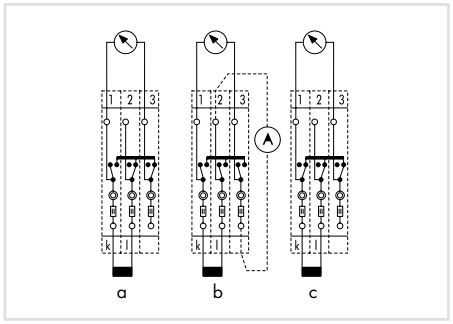

Current transformer circuit with transverse switching terminal blocks
a = Normal operation b = Measured value test
c = Transformer short circuit



Testing via touch-proof 4 mm Ø test plugs (not available from WAGO, but offered by industry suppliers such as, Multi-Contact Deutschland GmbH).

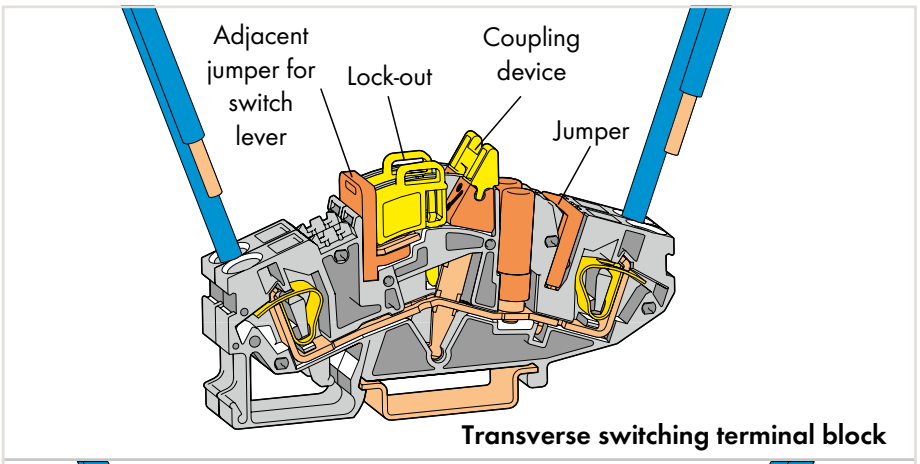



CAGE CLAMP® connection
Inserting a conductor.

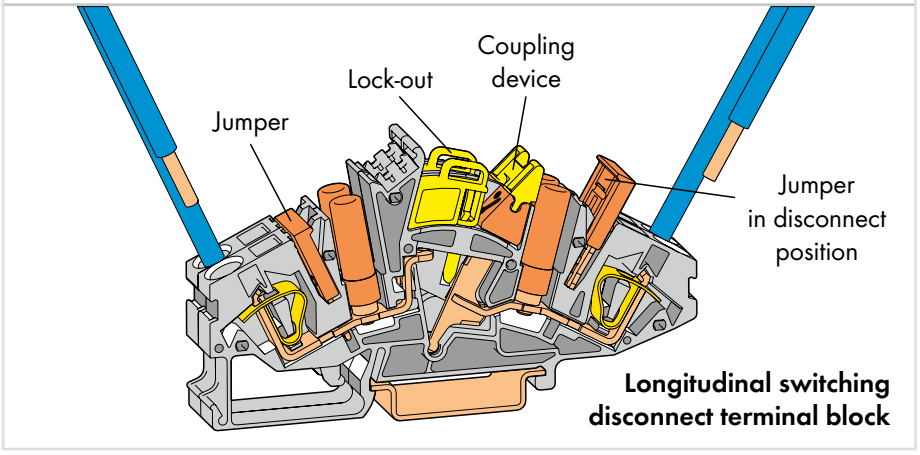



Inserting a lock-out.



Longitudinal switching disconnect terminal blocks

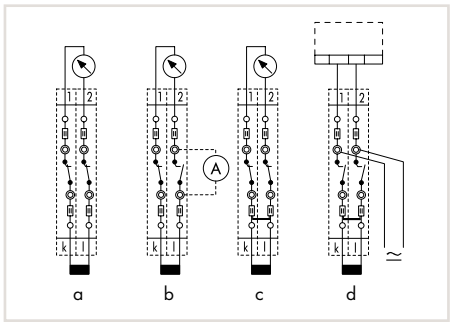

Current transformer circuit with longitudinal switching disconnect terminal blocks
a = Normal operation b = Measured value test
c = Transformer short circuit d = Relay test



CAGE CLAMP® terminates the following copper conductors:
solid



stranded



fine-stranded, also with tinned single strands

For aluminum conductors, see notes in Section 14. When using ferrules, the max. conductor cross section accommodated is one size smaller than max. rating of terminal block.

Jumper with Safety Lid for Longitudinal Switching Disconnect Terminal Blocks
282 Series

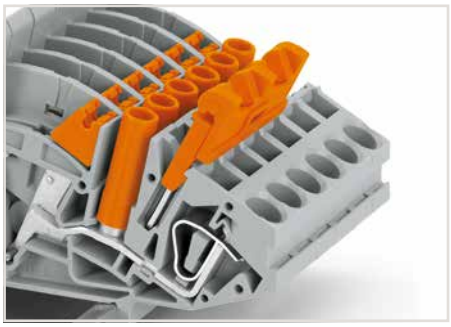

Jumper with safety lid in pre-locked position

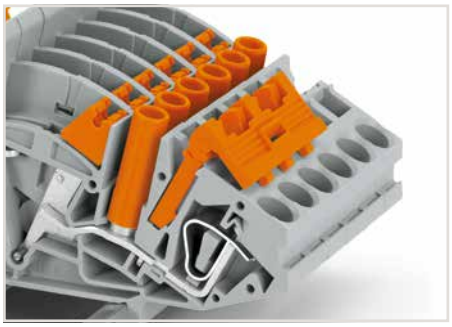

Longitudinal switching disconnect terminal blocks with inserted jumper, including safety lid



Jumper with raised safety lid

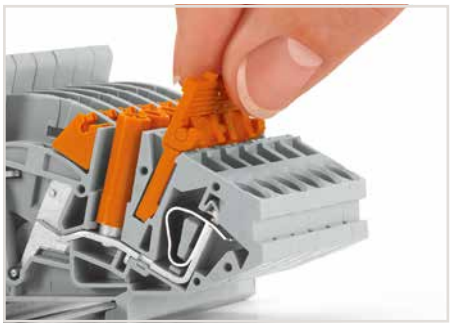

Removing a jumper via safety lid.



fine-stranded,
tip-bonded



fine-stranded,
with ferrule
(gastight crimped)



fine-stranded,
with pin terminal
(gastight crimped)

Transverse Switching Terminal Blocks and Longitudinal Switching Disconnect Terminal Blocks, Through Terminal Blocks (e.g., for Current Transformer Circuits)

6 mm², 282 Series

0.2 … 6 mm² | 24 … 10 AWG 500 V/6 kV/3 ❶ | 600 V, 30 A I_N 30 A | 300 V, 36 A Terminal block width 8 mm / 0.315 inch 12 … 13 mm / 0.47 … 0.51 inch	0.2 … 6 mm² | 24 … 10 AWG 500 V/6 kV/3 ❶ | 600 V, 30 A I_N 30 A | 300 V, 36 A Terminal block width 8 mm / 0.315 inch 12 … 13 mm / 0.47 … 0.51 inch	0.2 … 6 mm² | 24 … 10 AWG 500 V/6 kV/3 ❶ I_N 30 A Terminal block width 8 mm / 0.315 inch 12 … 13 mm / 0.47 … 0.51 inch

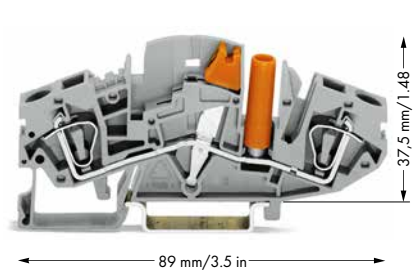

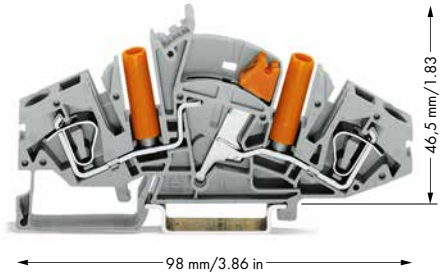

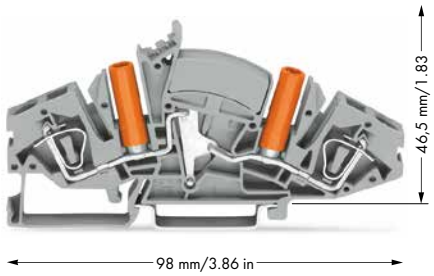

5

2-conductor disconnect/test terminal block, transverse switching terminal block, with touch-proof test socket, for 4 mm Ø test plug

	Item No.	Pack. Unit
gray	**282-811** ❷	20

Item-Specific Accessories

End and separator plate, 1.5 mm thick



orange	**282-366**	50 (5x10)
gray	**282-361**	50 (5x10)

Adjacent jumper for switch lever, insulated, orange, I_N 30 A



2-way	**282-442**	50 (5x10)
3-way	**282-443**	50 (5x10)
4-way	**282-444**	50 (5x10)
5-way	**282-445**	50 (5x10)
6-way	**282-446**	50 (5x10)

2-conductor disconnect/test terminal block, longitudinal switching disconnect terminal block, with touch-proof test sockets, for 4 mm Ø test plug

	Item No.	Pack. Unit
gray	**282-821** ❷	20

Item-Specific Accessories

End and separator plate, 1.5 mm thick



orange	**282-365**	50 (5x10)
gray	**282-360**	50 (5x10)

2-conductor through terminal block, with touch-proof test sockets, for 4 mm Ø test plug

	Item No.	Pack. Unit
gray	**282-841**	20

Item-Specific Accessories

End and separator plate, 1.5 mm thick



orange	**282-365**	50 (5x10)
gray	**282-360**	50 (5x10)

Accessories

Appropriate marking systems: WMB/Mini-WSB (see Section 13)

Lock-out, for disconnect link



yellow	**282-370**	100 (4x25)

Coupling device, mechanically locks multiple links, yellow



2-way	**282-372**	50 (5x10)
3-way	**282-373**	50 (5x10)
4-way	**282-374**	50 (5x10)

Jumper, insulated, I_N 30 A, orange



2-way	**282-432**	50 (5x10)
3-way	**282-433**	50 (5x10)
4-way	**282-434**	50 (5x10)
5-way	**282-435**	50 (5x10)
6-way	**282-436**	50 (5x10)
7-way	**282-437**	50 (5x10)
8-way	**282-438**	50 (5x10)
9-way	**282-439**	50 (5x10)
10-way	**282-440**	50 (5x10)

Protective warning marker, with black high-voltage symbol, for 5 terminal blocks



yellow	**282-415**	100 (4x25)

Jumper, special design, I_N 30 A, orange



1-3-5	**282-435/011-000**	
1-4-5	**282-435/301-000**	
1-2-4-6	**282-436/301-000**	
1-4-6	**282-436/304-000**	
1-3-5-7	**282-437/011-000**	
1-4-7	**282-437/012-000**	
1-2-5-8	**282-438/300-000**	
1-4-7-8	**282-438/301-000**	
1-3-5-7-9	**282-439/011-000**	
		50 (5x10)

Jumper with safety lid, insulated, I_N 30 A, orange



2-way	**282-432/100-000**	
3-way	**282-433/100-000**	
4-way	**282-434/100-000**	
		50 (5x10)

Collective jumper carrier, for DIN-35 rail, compatible with jumpers for transverse switching terminal block (282-811) and longitudinal switching disconnect terminal block (282-821)



gray	**282-369**	25

WMB Multi marking system, white, 10 strips with 10 markers per card, for terminal widths 5 … 17.5 mm

plain	**793-501**	5

WMB Multi marking system, plain, 10 strips with 10 markers per card, for terminal widths 5 … 17.5 mm



yellow	**793-501/000-002**	
red	**793-501/000-005**	
blue	**793-501/000-006**	
gray	**793-501/000-007**	
orange	**793-501/000-012**	
light green	**793-501/000-017**	
green	**793-501/000-023**	
violet	**793-501/000-024**	
		5

Overview of certification organizations, see page 654

0.2 ... 6 mm² | **24 ... 10 AWG**
500 V/6 kV/3 ❶
I_N 30 A

Terminal block width 8 mm / 0.315 inch
12 ... 13 mm / 0.47 ... 0.51 inch

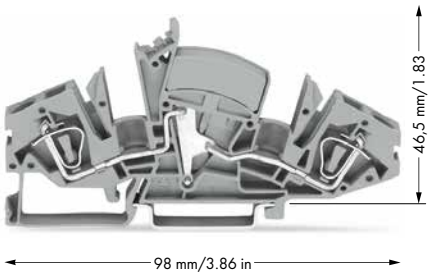

❶ 500 V = rated voltage
6 kV = rated surge voltage
3 = pollution degree
(see Section 14)

❷ 45 mm / 1.77 inch max. height when rotating the disconnect link (incl. locking cover)
For operating stickers, please refer to our online catalog:
for 282-811 (Item No. 210-424)
for 282-821 (Item No. 210-423)

	Item No.	Pack. Unit
2-conductor through terminal block, without test sockets		
gray	**282-841/049-000**	20

Item-Specific Accessories

End and separator plate, 1.5 mm thick



orange	**282-365**	50 (5x10)
gray	**282-360**	50 (5x10)

WMB Multi marking system, 10 strips with 10 markers per card, for terminal widths 5 ... 17.5 mm, yellow



k/l (50x)	**794-5553/000-002**	5

WMB Multi marking system, 10 strips with 10 markers per card, for terminal widths 5 ... 17.5 mm, blue



U/V (50x)	**794-5554/000-006**	5

Screwless end stop, for DIN-35 rail, 6 mm wide



gray	**249-116**	100 (4x25)

Screwless end stop, for DIN-35 rail, 10 mm wide



gray	**249-117**	50 (2x25)

Disconnect and Ground Conductor Disconnect Terminal Blocks, 30 A, Through Terminal Blocks of Same Profile

6 mm², 282 Series

0.2 ... 6 mm² | 24 ... 10 AWG 400 V/6 kV/3 ❶ | 600 V, 30 A I_N 30 A | 300 V, 36 A	0.2 ... 6 mm² | 24 ... 10 AWG 800 V/8 kV/3 ❶ | 600 V, 30 A I_N 41 A | 600 V, 40 A	0.2 ... 6 mm² | 24 ... 10 AWG
Terminal block width 8 mm / 0.315 inch 12 ... 13 mm / 0.47 ... 0.51 inch	Terminal block width 8 mm / 0.315 inch 12 ... 13 mm / 0.47 ... 0.51 inch	Terminal block width 16 mm / 0.63 inch 12 ... 13 mm / 0.47 ... 0.51 inch

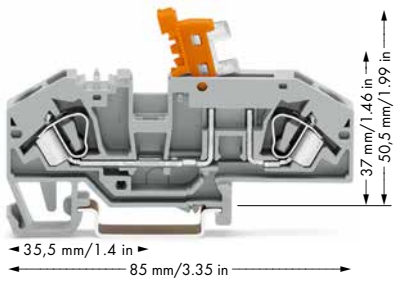

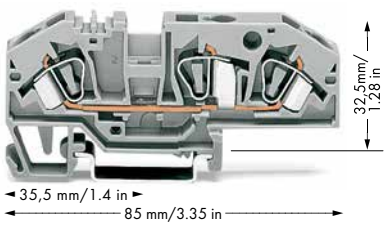

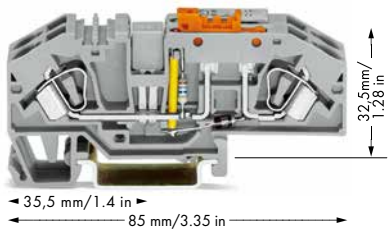

5

Item No.		Pack. Unit
2-conductor disconnect terminal block, with test point, orange disconnect link		
gray	282-697	25
blue	282-695	25
Other terminal blocks with the same profile:		
Through	282-699	Page 276

Item No.		Pack. Unit
3-conductor through terminal block, with test point, same profile as disconnect terminal blocks		
gray	282-699	25
blue	282-694	25
Other terminal blocks with the same profile:		
Disconnect	282-697	Page 276
Ground cond. disc.	282-640	Page 276
Fuse	282-696	Page 278

Item No.		Pack. Unit
Ground conductor disconnect terminal block, with test point, orange disconnect link, gray		
24 V	282-640	12
48 V	282-641	12
120 V	282-638	12
230 V	282-639	12
Other terminal blocks with the same profile:		
Through	282-699	Page 276

Item-Specific Accessories

Adjacent jumper, insulated, I_N 41 A			
	gray	282-402	100 (4x25)
Alternate jumper, insulated, I_N 41 A			
	gray	282-409	100 (4x25)
Test plug adapter, 8.3 mm wide, for 4 mm Ø test plug, for 1.5 ... 10 mm² terminal blocks			
	gray	209-170	50 (2x25)

Item-Specific Accessories

Adjacent jumper, insulated, I_N 41 A			
	gray	282-402	100 (4x25)
Alternate jumper, insulated, I_N 41 A			
	gray	282-409	100 (4x25)
Test plug adapter, 8.3 mm wide, for 4 mm Ø test plug, for 1.5 ... 10 mm² terminal blocks			
	gray	209-170	50 (2x25)

Accessories

Appropriate marking system: WMB
(see Section 13)

End plate, 2 mm thick			
	orange	282-333	100 (4x25)
	gray	282-334	100 (4x25)
Protective warning marker, with black high-voltage symbol, for 5 terminal blocks			
	yellow	282-405	100 (4x25)
Screwless end stop, for DIN-35 rail, 6 mm wide			
	gray	249-116	100 (4x25)
Screwless end stop, for DIN-35 rail, 10 mm wide			
	gray	249-117	50 (2x25)

Disconnect and Ground Conductor Disconnect Terminal Blocks



Ground conductor disconnect terminal block – top view

❶ 400 V/800 V = rated voltage
6 kV/8 kV = rated surge voltage
3 = pollution degree
(see Section 14)

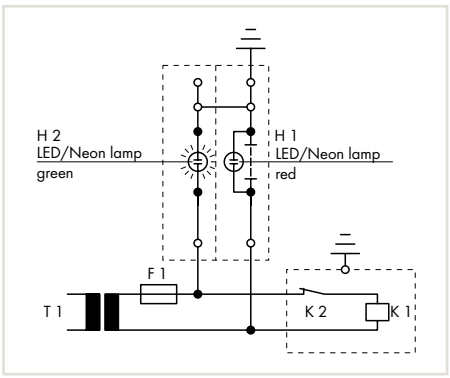

Operating condition
Slide link closed, auxiliary circuit grounded, green LED/ neon lamp illuminates.

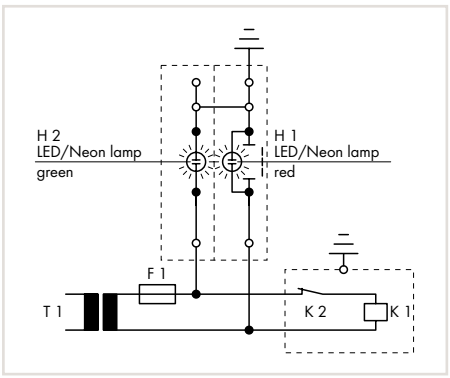

Test condition – no grounding
Slide link open, auxiliary circuit not grounded.

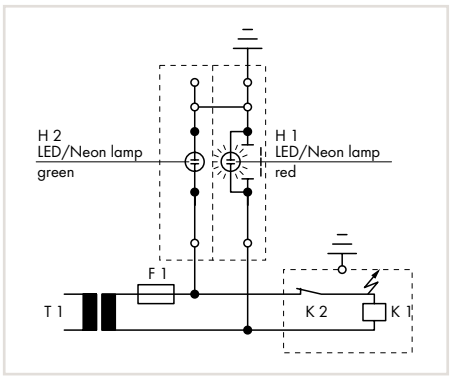

Test condition – grounding
Slide link open, auxiliary circuit not grounded, red LED/ neon lamp illuminates.



Testing via conductor entry.



Testing via jumper contact slot.

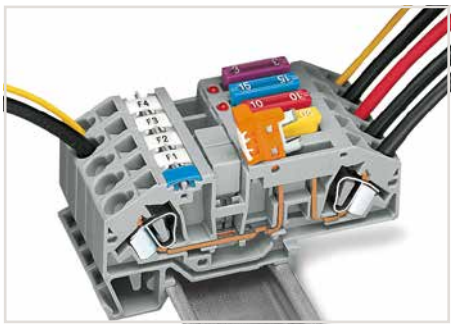

Power supply via disconnect link – disconnecting all outputs.

IEC 60204/DIN VDE 0113 "Safety of machinery – Electrical equipment of machines – Part 1: General requirements," Section 9.4.3.1: Ground faults on control circuits shall not cause unintentional starting, hazardous movements or prevent stopping of the machine.

In order to fulfill this requirement, bonding to the protective bonding circuit shall be provided in accordance with Section 8.2 and the devices shall be connected as described in Section 9.1.4. Control circuits fed from a transformer and not connected to the protective bonding circuit shall be provided with an insulation monitoring device (e.g., residual current device), which either indicates a ground fault or interrupts the circuit automatically after a ground fault.

In the case of electronic circuits, the connection of one side of the control circuit to the protective bonding circuit in accordance with Section 9.1.4 can prevent unintentional operation. When this does not help, or if due to other reasons that electronic circuits cannot be connected to the protective bonding circuit, other measures shall be taken to achieve the same level of safety.

Multipole control switches that interrupt all live conductors shall be used where the control circuit is directly connected between the phase conductors of the supply or between a phase conductor and a neutral conductor, which is either not grounded or grounded through a high impedance. This is required for starting or stopping those machine functions, which can cause a hazardous situation including: damaging the machine or halting work in progress in the event of unintentional starting or failure to stop.

Fuse Terminal Blocks for Automotive Blade-Style Fuses

6 mm², 282 Series

0.2 … 6 mm²	24 … 10 AWG	
400 V/6 kV/3 ❶ ❷	12 V, 30 A	
I_N 25 A (30 A)	24 V, 12 A	
Terminal block width 8 mm / 0.315 inch		
12 … 13 mm / 0.47 … 0.51 inch		

0.2 … 6 mm²	24 … 10 AWG	
400 V/6 kV/3 ❶ ❷	24 V, 30 A	
I_N 25 A (30 A)		
Terminal block width 8 mm / 0.315 inch		
12 … 13 mm / 0.47 … 0.51 inch		

0.2 … 6 mm²	24 … 10 AWG	
400 V/6 kV/3 ❶ ❷	600 V, 30 A	
I_N 25 A (30 A)	24 V, 30 A	
Terminal block width 8 mm / 0.315 inch		
12 … 13 mm / 0.47 … 0.51 inch		

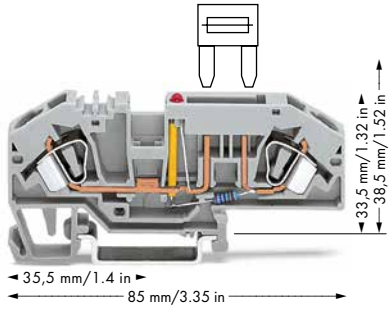

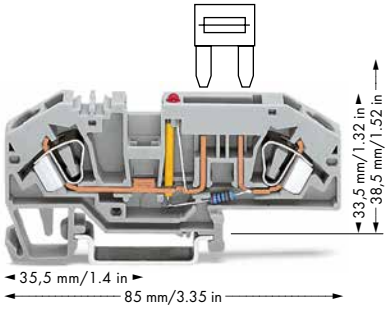

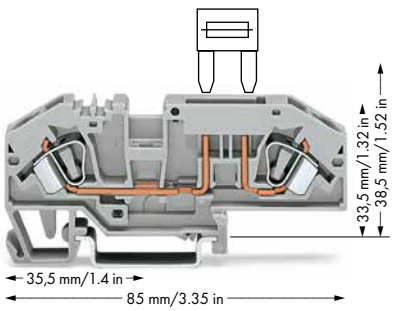

282-698/281-429 282-698/281-449 282-698/281-413 282-698/281-434

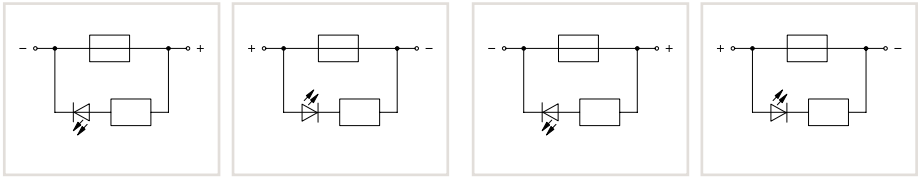

Item No.		Pack. Unit
2-conductor fuse terminal block for automotive blade-style fuses, 12 V, with test point, with blown fuse indication by LED, LED power consumption: 4.8 mA		
Electrical ratings are given by the fuse and blown fuse indication. Blade-style fuses: Observe touch-proof protection for 42 V and higher voltages!		
gray	**282-698/281-429**	25
gray	**282-698/281-449**	25
Other terminal blocks with the same profile:		
Through	**282-699**	Page 276
Blade-style fuses (not offered by WAGO)		
Excess-current circuit-breaker, thermal (not offered by WAGO) Recommended excess-current circuit-breakers from ETA		

Item No.		Pack. Unit
2-conductor fuse terminal block for automotive blade-style fuses, 24 V, with test point, with blown fuse indication by LED, LED power consumption: 4.8 mA		
Electrical ratings are given by the fuse and blown fuse indication. Blade-style fuses: Observe touch-proof protection for 42 V and higher voltages!		
gray	**282-698/281-413**	25
gray	**282-698/281-434**	25
Other terminal blocks with the same profile:		
Through	**282-699**	Page 276

Item No.		Pack. Unit
2-conductor fuse terminal block for automotive blade-style fuses, with test point, without blown fuse indication		
Electrical ratings are given by the fuse. Blade-style fuses: Observe touch-proof protection for 42 V and higher voltages!		
gray	**282-696**	25
Other terminal blocks with the same profile:		
Through	**282-699**	Page 276

Accessories for Fuse Terminal Blocks

Appropriate marking system: WMB
(see Section 13)

End plate, 2 mm thick



orange	**282-333**	100 (4x25)
gray	**282-334**	100 (4x25)

Adjacent jumper, insulated, I_N 41 A



gray	**282-402**	100 (4x25)

Alternate jumper, insulated, I_N 41 A



gray	**282-409**	100 (4x25)

Test plug adapter, 8.3 mm wide, for 4 mm Ø test plug, for 1.5 … 10 mm² terminal blocks



gray	**209-170**	50 (2x25)

Screwless end stop, for DIN-35 rail, 6 mm wide



gray	**249-116**	100 (4x25)

Screwless end stop, for DIN-35 rail, 10 mm wide



gray	**249-117**	50 (2x25)

Fuse Terminal Blocks for Automotive Blade-Style Fuses

Technical Information

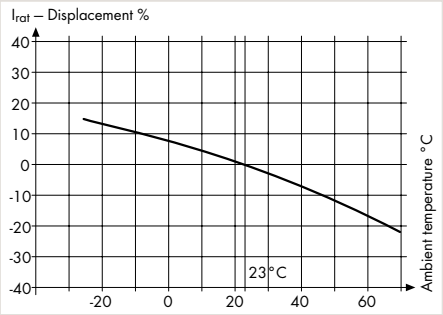

Application Notes on Terminal Blocks for Miniature Metric Fuses

Nominal current ratings for fuse cartridges are defined differently in international standards.
This is why the recommended continuous current-carrying capacity of the fuses is max. 80 % of their nominal current according to DIN 72581/Part 3 (for an ambient operating temperature of 23 °C).
Selecting the correct fuse cartridge is important for product safety within applications, as well as for fuse cartridge service life and reliability. Fuse cartridges will only operate perfectly as protection components (break-off point) if they are properly selected and used as intended (i.e., according to the state of the technology and valid specifications, as well as data sheet characteristics), according to basic safety requirements (i.e., persons, animals and property must be protected against hazards).

❶ 400 V = rated voltage
6 kV = rated surge voltage
3 = pollution degree
(see Section 14)

❷ Electrical ratings are given by the fuse (see page 292).

5

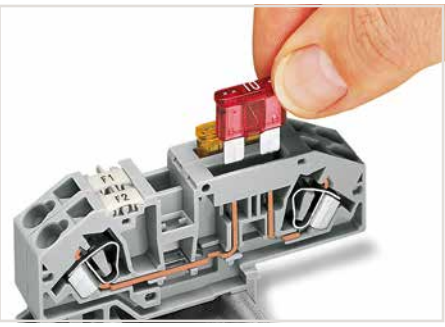

Inserting a fuse.



Blown fuse indication by LED

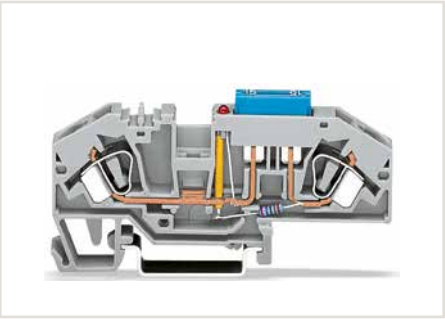

2-conductor fuse terminal block with mini-automotive blade-style fuse

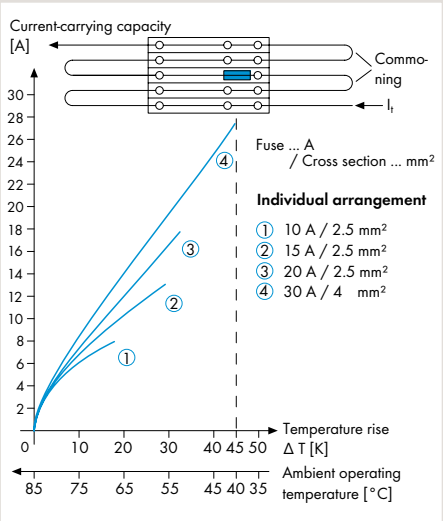

Application Notes on Terminal Blocks for Miniature Metric Fuses

Diagram: Individual arrangement

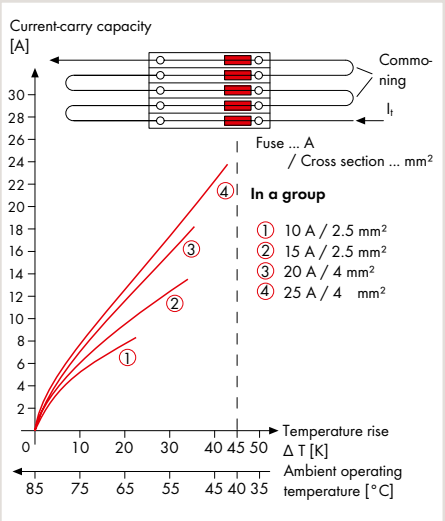

Application Notes on Terminal Blocks for Miniature Metric Fuses

Diagram: Block arrangement

Information from the mini-automotive, blade-type fuse manufacturers

Derating T_{amb} /°C	%	F_T
- 25	14	0.877
- 20	13	0.885
- 15	12	0.893
- 10	11	0.901
- 5	10	0.909
0	9	0.917
5	8	0.926
10	6	0.943
15	4	0.962
20	2	0.980
23	0	1.000
30	- 2	1.020
35	- 4	1.042
40	- 6	1.064
45	- 8	1.087
50	- 10	1.111
55	- 13	1.149
60	- 16	1.190
65	- 19	1.235
70	- 22	1.282

For product safety, fuse cartridges must generally be tested both under normal and faulty operating conditions within your application.

Fused Disconnect Terminal Blocks with a Pivoting Fuse Holder, for Miniature Metric Fuses, 282 Series

Description and Installation



Blown fuse indication by LED or neon lamp



Fuse replacement:
Before replacing a fuse, pivot the fuse holder into the locked open position.

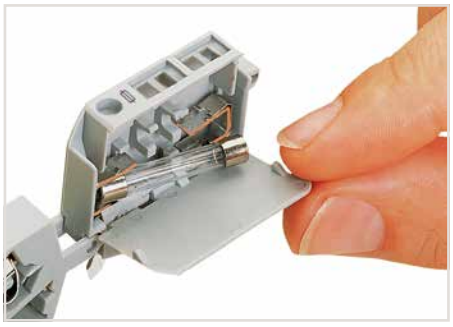

Fuse replacement:
One end of the fuse is automatically ejected from the holder when opening the cover.

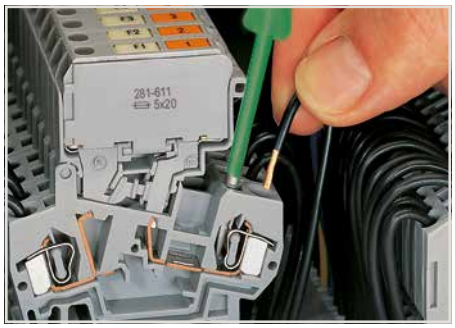

CAGE CLAMP® connection
Inserting a conductor via screwdriver.
With ferruled conductors, it is necessary to use a terminal block one size smaller than the conductor's nominal cross section.

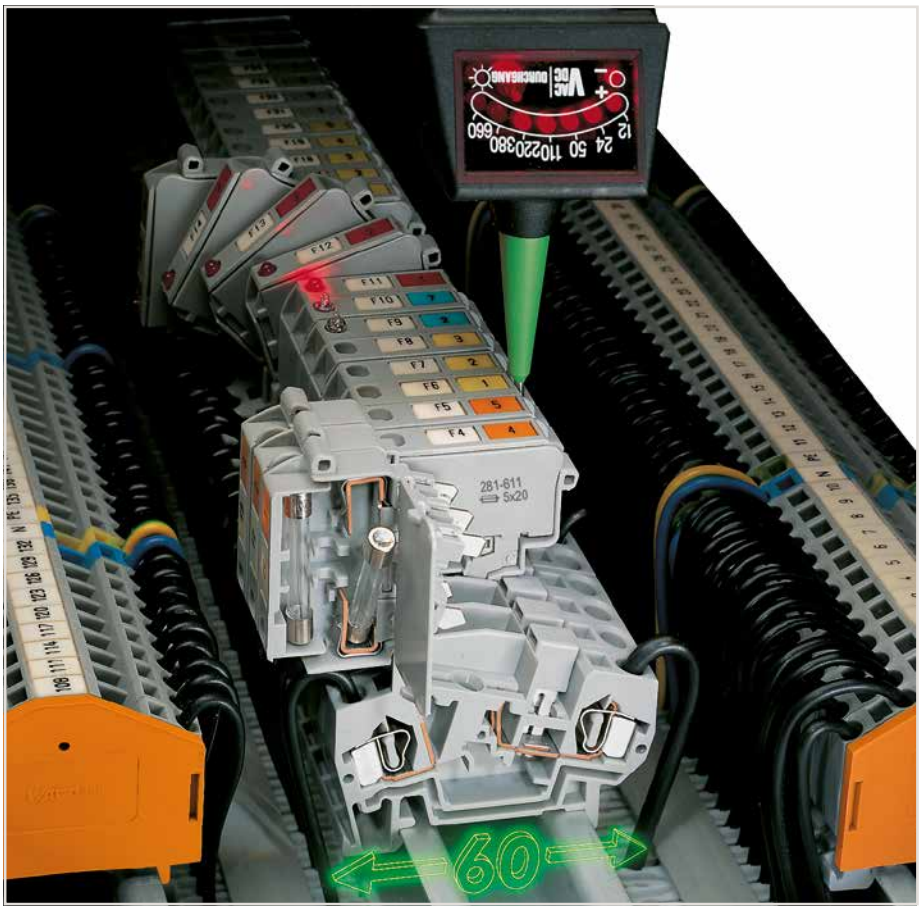

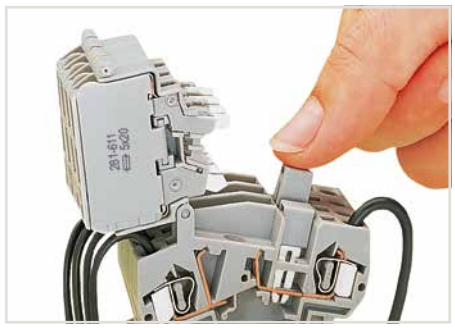

Commoning:
Distributing current to several fuse-protected circuits via insulated push-in type jumpers.

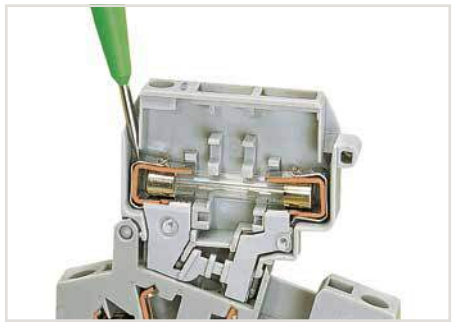

Voltage test, either at input or output with fuse holder in closed position (live)

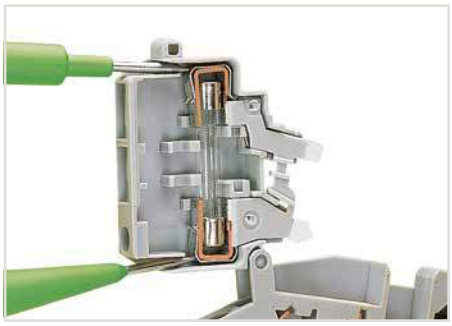

Through test with fuse holder in open position (no voltage)

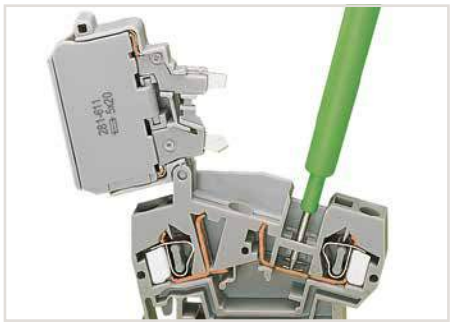

Voltage test at input in the test slot of the current bar



CAGE CLAMP® terminates the following copper conductors:
solid



stranded



fine-stranded, also with tinned single strands

For aluminum conductors, see notes in Section 14. When using ferrules, the max. conductor cross section accommodated is one size smaller than max. rating of terminal block.

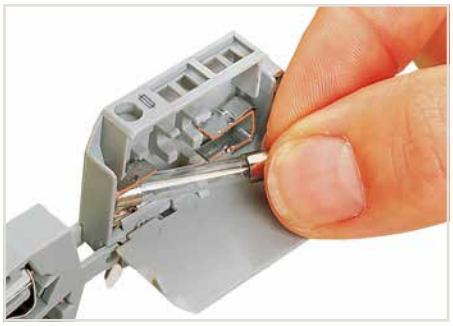

Fuse replacement:
Easily removing a fuse by hand.

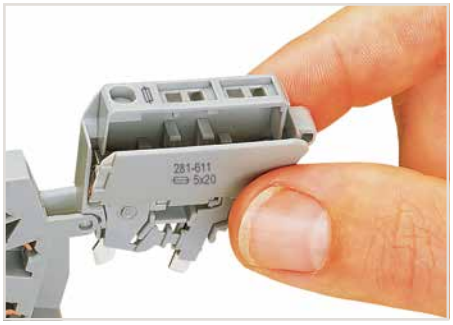

Fuse replacement:
Insert a new fuse and snap the cover closed.

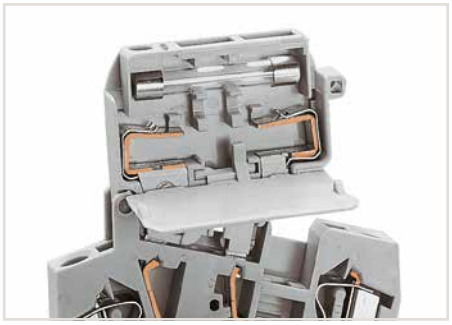

Storing a spare fuse (fuse holder without blown fuse indication).

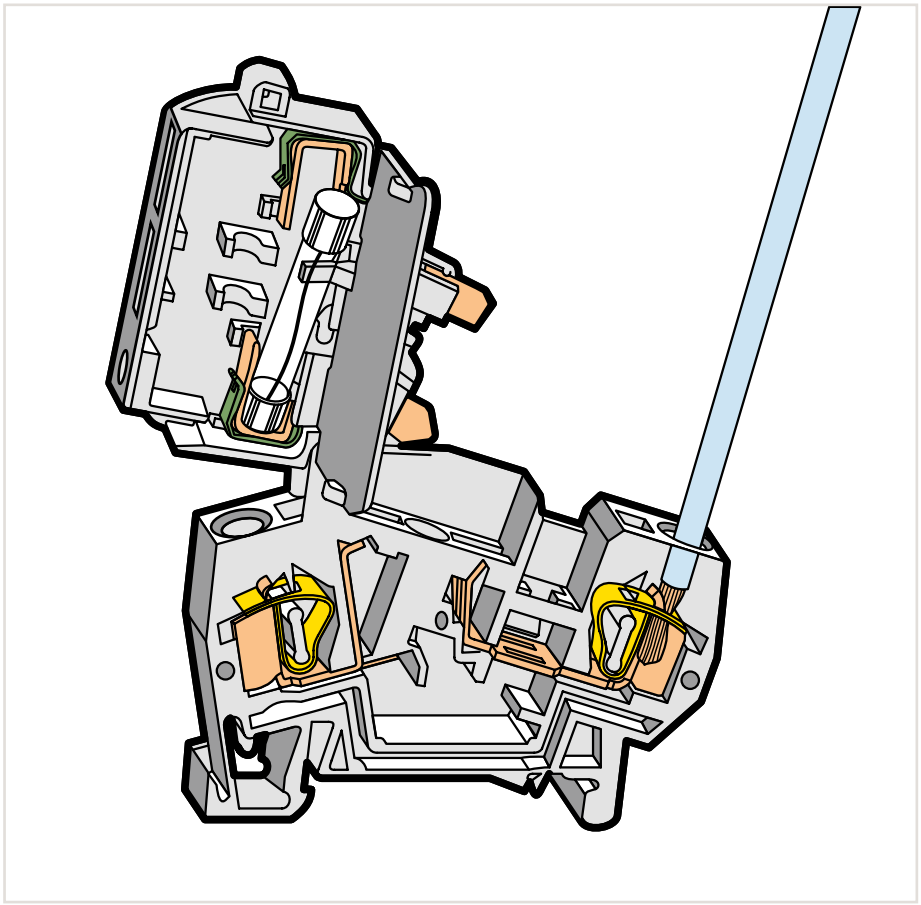



Touch-proof protection in all positions of the fuse holder



Fuse holder will remain safely locked open in vertical assemblies.



Testing voltage at the output via separate test slot.

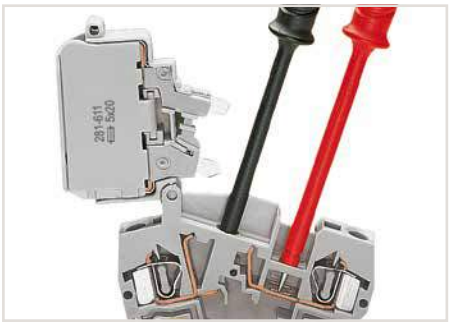

Measuring current between jumper slot and separate test slot.

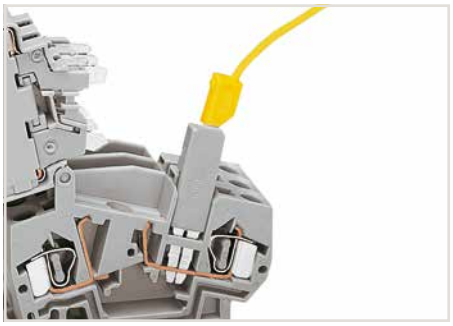

Testing voltage (input side) via test plug adapter (280-404, shown) or test plug (281-407).



fine-stranded,
tip-bonded



fine-stranded,
with ferrule
(gastight crimped)



fine-stranded,
with pin terminal
(gastight crimped)

Fused Disconnect Terminal Blocks with a Pivoting Fuse Holder, for 5 x 20 mm, 5 x 25 mm and 5 x 30 mm Miniature Metric Fuses

4 mm², 281 Series

0.08 ... 4 mm²	28 ... 12 AWG	0.08 ... 4 mm²	28 ... 12 AWG	0.08 ... 4 mm²	28 ... 12 AWG
800 V/8 kV/3 ❶ ❷	600 V, 10 A	800 V/8 kV/3 ❶ ❷	30 V, 10 A	800 V/8 kV/3 ❶ ❷	220 V, 10 A
I_N 10 A	600 V, 10 A	I_N 10 A	230 V, 10 A	I_N 10 A	230 V, 10 A
Terminal block width 8 mm / 0.315 inch		Terminal block width 8 mm / 0.315 inch		Terminal block width 8 mm / 0.315 inch	
9 ... 10 mm / 0.35 ... 0.39 inch		9 ... 10 mm / 0.35 ... 0.39 inch		9 ... 10 mm / 0.35 ... 0.39 inch	

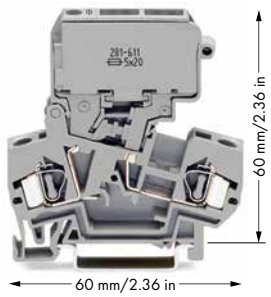



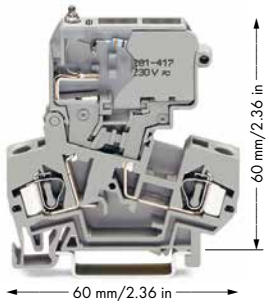

5

Item No.		Pack. Unit	Item No.		Pack. Unit	Item No.		Pack. Unit
Fuse disconnect terminal block with pivoting fuse holder, for (5 x 20) mm miniature metric fuse, without blown fuse indication Electrical ratings are given by the fuse.			Fuse disconnect terminal block with pivoting fuse holder, for (5 x 20) mm miniature metric fuse, with blown fuse indication by LED, gray Electrical ratings are given by the fuse and blown fuse indication. Leakage current in case of blown fuse: LED 6 mA			Fuse disconnect terminal block with pivoting fuse holder, for (5 x 20) mm miniature metric fuse, with blown fuse indication by neon lamp, gray Electrical ratings are given by the fuse and blown fuse indication. Leakage current in case of blown fuse: Neon lamp < 0.4 mA		
○ gray	**281-611**	50	○ 15 ... 30 V	**281-611/281-541**	50	○ 230 V	**281-611/281-417**	50
○ orange	**281-616**	50	○ 30 ... 65 V	**281-611/281-542**	50	○ 120 V	**281-611/281-418**	50
Fuse disconnect terminal block with pivoting fuse holder, for (5 x 25) mm miniature metric fuse, without blown fuse indication Electrical ratings are given by the fuse.			Fuse disconnect terminal block with pivoting fuse holder, for (5 x 25) mm miniature metric fuse, with blown fuse indication by LED, gray Electrical ratings are given by the fuse and blown fuse indication. Leakage current in case of blown fuse: LED 6 mA			Fuse disconnect terminal block with pivoting fuse holder, for (5 x 25) mm miniature metric fuse, with blown fuse indication by neon lamp, gray Electrical ratings are given by the fuse and blown fuse indication. Leakage current in case of blown fuse: Neon lamp < 0.4 mA		
○ gray	**281-612**	50	○ 15 ... 30 V	**281-612/281-541**	50	○ 230 V	**281-612/281-417**	50
			○ 30 ... 65 V	**281-612/281-542**	50	○ 120 V	**281-612/281-418**	50
Fuse disconnect terminal block with pivoting fuse holder, for (5 x 30) mm miniature metric fuse, without blown fuse indication Electrical ratings are given by the fuse.			Fuse disconnect terminal block with pivoting fuse holder, for (5 x 30) mm miniature metric fuse, with blown fuse indication by LED, gray Electrical ratings are given by the fuse and blown fuse indication. Leakage current in case of blown fuse: LED 6 mA			Fuse disconnect terminal block with pivoting fuse holder, for (5 x 30) mm miniature metric fuse, with blown fuse indication by neon lamp, gray Electrical ratings are given by the fuse and blown fuse indication. Leakage current in case of blown fuse: Neon lamp < 0.4 mA		
○ gray	**281-622**	50	○ 15 ... 30 V	**281-622/281-541**	50	○ 230 V	**281-622/281-417**	50
			○ 30 ... 65 V	**281-622/281-542**	50	○ 120 V	**281-622/281-418**	50
Miniature metric fuses are available upon request.			Miniature metric fuses are available upon request.			Miniature metric fuses are available upon request.		

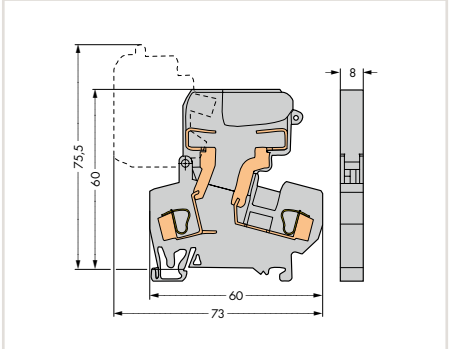

Dimensions in mm

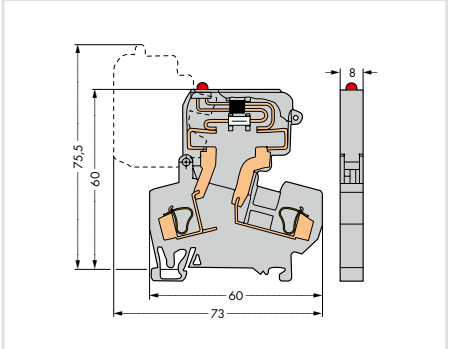

Dimensions in mm

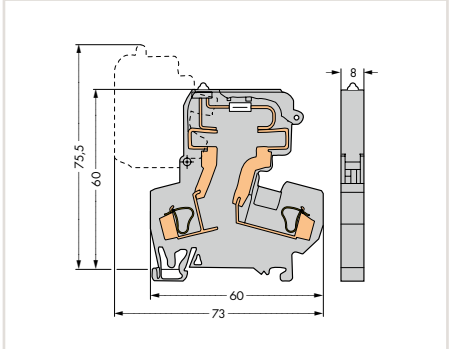

Dimensions in mm

Overview of certification organizations, see page 654

0.08 ... 4 mm²	28 ... 12 AWG
800 V/8 kV/3 ❶	600 V, 16 A
I_N 16 A	

Terminal block width 8 mm / 0.315 inch
9 ... 10 mm / 0.35 ... 0.39 inch





Fused disconnect or disconnect terminal blocks with a width of 8 mm can be assembled adjacently. At the end of an assembly or if there is **no** adjacent fused disconnect or disconnect terminal block, an end or intermediate plate must be used.

❶ 800 V = rated voltage
8 kV = rated surge voltage
3 = pollution degree
(see Section 14)

❷ Electrical ratings are given by the fuse (see page 292).

	Item No.	Pack. Unit
Disconnect terminal block with movable disconnect slide link		
gray	**281-624**	50
orange	**281-672**	50



Fuse holders are printed with correct fuse size.

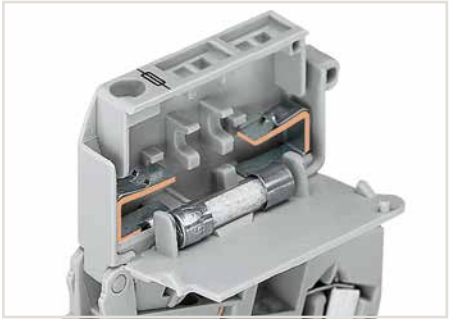

5 x 20 mm, 5 x 25 mm and ¼" x 1" fuse holders are fitted with stops on the inside of the cover.

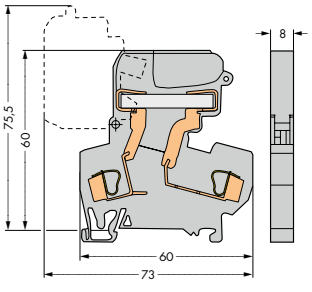

Dimensions in mm

281 Series Accessories

Appropriate marking system:
WMB (see Section 13)

End and intermediate plate, 2.5 mm thick			
	orange	**281-309**	100 (4x25)
	gray	**281-311**	100 (4x25)
Adjacent jumper, insulated, I_N = I_N terminal block			
	gray	**281-402**	200 (8x25)
Collective carrier for adjacent jumpers			
	gray	**209-100**	50 (2x25)
Test plug adapter, 5 mm wide, for 210-137 Test Plug (2.3 mm Ø), for 1.5 ... 4 mm² terminal blocks			
	gray	**280-404**	100 (4x25)
Test plug, with 500 mm cable, 2.3 mm Ø, max. 42 V			
	yellow	**210-137**	50
Test plug adapter, 6 mm wide, with CAGE CLAMP®, for 0.08 ... 2.5 mm²			
	I_N 24 A	**281-407**	100 (4x25)
Push-in type wire jumper, insulated, wire size 0.75 mm², I_N 9 A			
	L = 60 mm	**249-125**	10
	L = 110 mm	**249-126**	10
	L = 250 mm	**249-127**	10
Interlocking link, mechanically locks multiple links, 1 m/3'3" long			
	transparent	**210-254**	1
Screwless end stop, for DIN-35 rail, 6 mm wide			
	gray	**249-116**	100 (4x25)
Screwless end stop, for DIN-35 rail, 10 mm wide			
	gray	**249-117**	50 (2x25)

Fused Disconnect Terminal Blocks with a Pivoting Fuse Holder, for ¼" x 1" and ¼" x 1¼" Miniature Metric Fuses

4 mm², 281 Series

0.08 … 4 mm²	28 … 12 AWG	
800 V/8 kV/3 ❶ ❷	600 V, 10 A	
I_N 10 A	600 V, 10 A	
Terminal block width 10 mm / 0.394 inch		
9 … 10 mm / 0.35 … 0.39 inch		

0.08 … 4 mm²	28 … 12 AWG	
800 V/8 kV/3 ❶ ❷	30 V, 10 A	
I_N 10 A	30 V, 10 A	
Terminal block width 10 mm / 0.394 inch		
9 … 10 mm / 0.35 … 0.39 inch		

0.08 … 4 mm²	28 … 12 AWG	
800 V/8 kV/3 ❶ ❷	220 V, 10 A	
I_N 10 A	100 V, 10 A	
Terminal block width 10 mm / 0.394 inch		
9 … 10 mm / 0.35 … 0.39 inch		





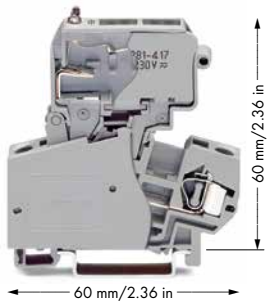

5

Item No.		Pack. Unit
Fuse disconnect terminal block with pivoting fuse holder, for ¼" x 1" miniature metric fuse, without blown fuse indication		
Electrical ratings are given by the fuse.		
gray	**281-613**	50
Fuse disconnect terminal block with pivoting fuse holder, for ¼" x 1¼" miniature metric fuse, without blown fuse indication		
Electrical ratings are given by the fuse.		
gray	**281-623**	50
Miniature metric fuses are available upon request.		

Item No.		Pack. Unit
Fuse disconnect terminal block with pivoting fuse holder, for ¼" x 1" miniature metric fuse, with blown fuse indication by LED, gray		
Electrical ratings are given by the fuse and blown fuse indication. Leakage current in case of blown fuse: LED 6 mA		
15 … 30 V	**281-613/281-541**	50
30 … 65 V	**281-613/281-542**	50
Fuse disconnect terminal block with pivoting fuse holder, for ¼" x 1¼" miniature metric fuse, with blown fuse indication by LED, gray		
Electrical ratings are given by the fuse and blown fuse indication. Leakage current in case of blown fuse: LED 6 mA		
15 … 30 V	**281-623/281-541**	50
30 … 65 V	**281-623/281-542**	50
Miniature metric fuses are available upon request.		

Item No.		Pack. Unit
Fuse disconnect terminal block with pivoting fuse holder, for ¼" x 1" miniature metric fuse, with blown fuse indication by neon lamp, gray		
Electrical ratings are given by the fuse and blown fuse indication. Leakage current in case of blown fuse: Neon lamp < 0.4 mA		
230 V	**281-613/281-417**	50
120 V	**281-613/281-418**	50
Fuse disconnect terminal block with pivoting fuse holder, for ¼" x 1¼" miniature metric fuse, with blown fuse indication by neon lamp, gra		
Electrical ratings are given by the fuse and blown fuse indication. Leakage current in case of blown fuse: Neon lamp < 0.4 mA		
230 V	**281-623/281-417**	50
120 V	**281-623/281-418**	50
Miniature metric fuses are available upon request.		

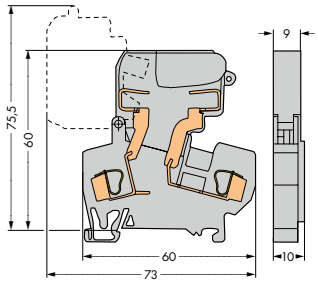

Dimensions in mm

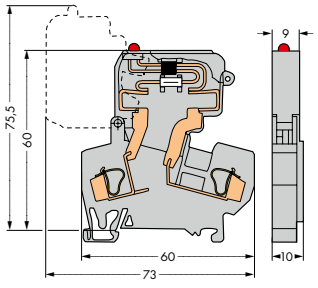

Dimensions in mm

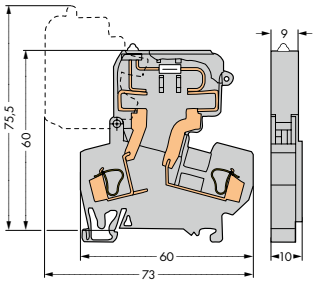

Dimensions in mm

Overview of certification organizations, see page 654

❶ 800 V = rated voltage
8 kV = rated surge voltage
3 = pollution degree
(see Section 14)

❷ Electrical ratings are given by the fuse (see page 292).



An intermediate plate is supplied with all 10 mm wide fused disconnect terminal blocks. At the end of an assembly or if there is **no** adjacent fused disconnect terminal block, an end or intermediate plate must be used.

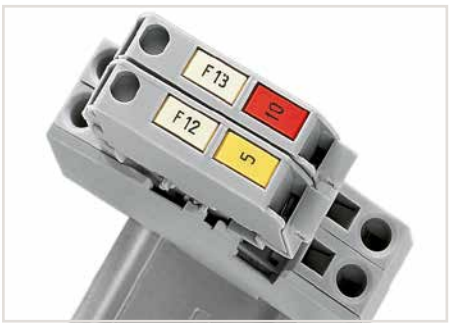

Each fuse holder features two marker slots for custom WMB Multi markers (example shows 8 mm wide terminal blocks).



Ganging several fuse holders with an interlocking link (example shows 8 mm wide terminal blocks).

281 Series Accessories

Appropriate marking system:
WMB (see Section 13)

End and intermediate plate, 2.5 mm thick			
	orange	**281-309**	100 (4x25)
	gray	**281-311**	100 (4x25)
Adjacent jumper, insulated, I_N = I_N terminal block			
	gray	**281-402**	200 (8x25)
Collective carrier for adjacent jumpers			
	gray	**209-100**	50 (2x25)
Test plug adapter, 5 mm wide, for 210-137 Test Plug			
	(2.3 mm Ø), for 1.5 ... 4 mm² terminal blocks		
	gray	**280-404**	100 (4x25)
Test plug, with 500 mm cable, 2.3 mm Ø, max. 42 V			
	yellow	**210-137**	50
Test plug adapter, 6 mm wide, with CAGE CLAMP®, for			
	0.08 ... 2.5 mm²		
	I_N 24 A	**281-407**	100 (4x25)
Push-in type wire jumper, insulated, wire size 0.75 mm²,			
	I_N 9 A		
	L = 60 mm	**249-125**	10
	L = 110 mm	**249-126**	10
	L = 250 mm	**249-127**	10
Interlocking link, mechanically locks multiple links, 1			
	m/3'3" long		
	transparent	**210-254**	1
Screwless end stop, for DIN-35 rail, 6 mm wide			
	gray	**249-116**	100 (4x25)
Screwless end stop, for DIN-35 rail, 10 mm wide			
	gray	**249-117**	50 (2x25)

Fuse Plugs on Carrier Terminal Blocks, 4 mm²

281 Series

Fuse plug with pull-tab
for (5 x 20) mm and (5 x 25) mm miniature metric fuses
250 V / I_N 6.3 A ❹
Plug width 6 mm / 0.236 inch

Fuse plug with pull-tab
for (5 x 20) mm and (5 x 25) mm miniature metric fuses
250 V / I_N 6.3 A ❹
Plug width 6 mm / 0.236 inch





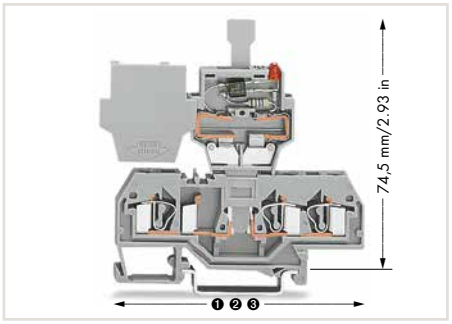

Length of carrier terminal blocks with a fuse plug:
❶ 59 mm / 2.32 inch for 281-916
❷ 73.5 mm / 2.89 inch for 281-610
❸ 86 mm / 3.39 inch for 281-656

For terminal blocks with side marking, see www.wagocatalog.com

5

281-511 281-512 281-512/281-501 281-512/281-418

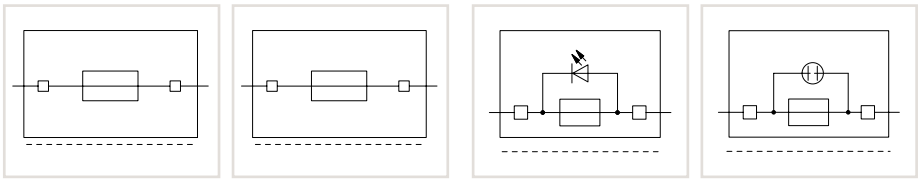

Item No.		Pack. Unit
Fuse plug with pull-tab, for (5 x 20) mm and (5 x 25) mm miniature metric fuses, 6 mm wide		
Electrical ratings are given by the fuse.		
gray	**281-511**	50
Fuse plug with pull-tab, for (5 x 20) mm and (5 x 25) mm miniature metric fuses, with hole for one LED (for self-assembly), 6 mm wide		
Electrical ratings are given by the fuse and blown fuse indication.		
gray	**281-512**	50

Item No.		Pack. Unit
Fuse plug with pull-tab, for (5 x 20) mm and (5 x 25) mm miniature metric fuses, with LED indicator, 24 VAC/DC, 6 mm wide		
Electrical ratings are given by the fuse and blown fuse indication. Leakage current in case of blown fuse: LED 5 ... 20 mA,		
gray	**281-512/281-501**	50
Fuse plug with pull-tab, for (5 x 20) mm and (5 x 25) mm miniature metric fuses, with neon lamp 120 VAC/DC, 6 mm wide		
Electrical ratings are given by the fuse and blown fuse indication. Leakage current in case of blown fuse: Neon lamp < 0.4 mA		
gray	**281-512/281-418**	50
Fuse plug with pull-tab, for (5 x 20) mm and (5 x 25) mm miniature metric fuses, with neon lamp 230 VAC/DC, 6 mm wide		
Electrical ratings are given by the fuse and blown fuse indication. Leakage current in case of blown fuse: Neon lamp < 0.4 mA		
gray	**281-512/281-417**	50

Accessories

Appropriate marking system: 4 mm wide WSB for plug and WMB for terminal block

2-conductor carrier terminal block,			
❶	0.08 ... 4 mm² / 28 ... 12 AWG		
	Terminal block width 6 mm / 0.236 inch		
	gray	**281-916**	50
End and intermediate plate, 2.5 mm thick			
	orange	**281-329**	100 (4x25)
	gray	**281-328**	100 (4x25)
Wire commoning chain, insulated, 50 connections, I_N 8 A			
	black	**210-103**	1

3-conductor carrier terminal block,			
❷	0.08 ... 4 mm² / 28 ... 12 AWG		
	Terminal block width 6 mm / 0.236 inch		
	gray	**281-610**	50
End and intermediate plate, 2.5 mm thick			
	orange	**281-326**	100 (4x25)
	gray	**281-324**	100 (4x25)
Wire commoning chain, insulated, 50 connections, I_N 8 A			
	blue	**210-123**	1

Accessories

4-conductor carrier terminal block,			
❸	0.08 ... 4 mm² / 28 ... 12 AWG		
	Terminal block width 6 mm / 0.236 inch		
	gray	**281-656**	50
End and intermediate plate, 2.5 mm thick			
	orange	**281-335**	100 (4x25)
	gray	**281-334**	100 (4x25)
Comb-style jumper bar, insulated, I_N = I_N terminal block			
	2-way	**281-482**	100 (4x25)
	3-way	**281-483**	100 (4x25)
	5-way	**281-485**	100 (4x25)
	10-way	**281-490**	50 (2x25)
Alternate comb-style jumper bar, insulated, I_N = I_N terminal block			
	2-way	**281-492**	100 (4x25)
Operating tool, of insulating material			
	2-way	**280-432**	1
	3-way	**280-433**	1
	5-way	**281-440**	1
WSB Quick marking system, white, 10 strips with 10 markers per card, 4 mm wide WSB markers			
	plain	**209-701**	5
WSB Quick marking system, plain, 10 strips with 10 markers per card, 4 mm wide WSB markers			
	yellow	**209-701/000-002**	
	red	**209-701/000-005**	
	blue	**209-701/000-006**	
	gray	**209-701/000-007**	
	orange	**209-701/000-012**	
	light green	**209-701/000-017**	
	green	**209-701/000-023**	
	violet	**209-701/000-024**	
			5
Shorting link, (5 x 20) mm, allows the fuse plug to be used as a disconnect plug			
	I_N 6.3 A	**281-503**	250 (10x25)

Overview of certification organizations, see page 654

❹ Electrical ratings are given by the fuse or LED nominal voltage (see page 292).

Accessories

WSB Quick marking system, for fuse plug (281-5..), white, 4 mm wide WSB markers



F1, ..., F10 (10x)	**209-787**	5
F11, ..., F20 (10x)	**209-700/209-124**	
F21, ..., F30 (10x)	**209-700/209-125**	
F31, ..., F40 (10x)	**209-700/209-126**	
F41, ..., F50 (10x)	**209-700/209-127**	
		5

WMB Multi marking system, white, 10 strips with 10 markers per card, 5 ... 5.2 mm stretchable

plain	**793-5501**	5

WMB Multi marking system, plain, 10 strips with 10 markers per card, 5 ... 5.2 mm stretchable



yellow	**793-5501/000-002**	
red	**793-5501/000-005**	
blue	**793-5501/000-006**	
gray	**793-5501/000-007**	
orange	**793-5501/000-012**	
light green	**793-5501/000-017**	
green	**793-5501/000-023**	
violet	**793-5501/000-024**	
		5



Using fuse plugs with rail-mount terminal blocks for control circuit protection is highly advantageous because the function and wiring levels are separated:
- No additional cost for assembly and wiring
- No risk of accidental contact with live parts when disconnecting the fuse plug
- The fuse plug is completely separated from the carrier terminal block when replacing a fuse – away from current carrying parts
- The fuse plug can be removed by service personnel
- No unintentional reclosing of the circuit by another person
- Quickly exchange a fuse by using a prepared "stand-by plug"

Fuse plug features for quick and safe applications:
- Optional LED indicates blown fuse
- Top-of-unit marking slot provides clear carrier terminal block identification
- Two test slots with touch contacts
- Terminal blocks/plugs provide high-density wiring in a width of just 6 mm
- May be used as a disconnect plug in combination with a shorting link

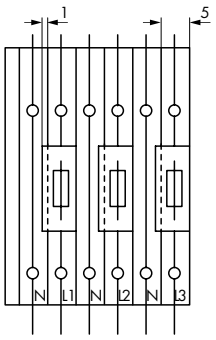

Open side of terminal block left

When a corresponding neutral circuit is adjacent to the fuse plug, a 5 mm wide space-saving terminal block may be used, as a 6 mm fuse plug may overlap the terminal block (see diagram).
For 5 mm wide carrier terminal blocks can be used with end plates, for example.

Fuse Plugs on Carrier Terminal Blocks, 2.5 mm²

280 Series

Fuse plug 5 mm wide 125 V / I_N 5 A ❹ Plug width 5 mm / 0.197 inch	Fuse plug 5 mm wide 125 V / I_N 5 A ❹ Plug width 5 mm / 0.197 inch





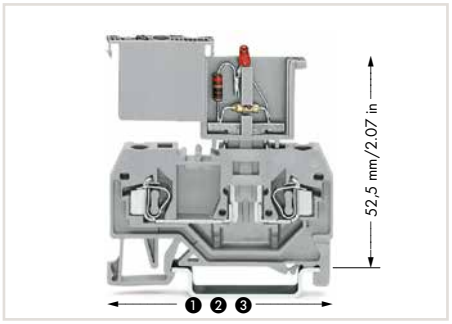

Length of carrier terminal blocks with a fuse plug:
❶ 53 mm / 2.09 inch for 280-916
❷ 64 mm / 2.52 inch for 280-610
❸ 75 mm / 2.95 inch for 280-816

For terminal blocks with side marking, see www.wagocatalog.com

5

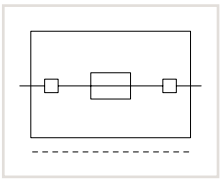

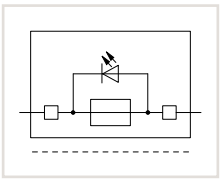

Item No.		Pack. Unit
Fuse plug, with soldered miniature fuse, 5 mm wide, gray Electrical ratings are given by the fuse.		
◯ 250 mA FF	**280-850**	100
◯ 500 mA FF	**280-852**	100
◯ 1 A FF	**280-854**	100
◯ 2 A FF	**280-856**	100

Item No.		Pack. Unit
Fuse plug, with soldered miniature fuse, with indicator lamp, additional LED, 15 ... 30 VDC, 5 mm wide, gray Electrical ratings are given by the fuse and blown fuse indication. Leakage current in case of blown fuse: LED 5 ... 20 mA		
◯ 250 mA FF	**280-850/281-413**	100
◯ 500 mA FF	**280-852/281-413**	100
◯ 1 A FF	**280-854/281-413**	100
◯ 2 A FF	**280-856/281-413**	100

Fuse Plug Accessories

Wire commoning chain, insulated, 50 connections, I_N 8 A



blue	**210-123**	1

WMB Multi marking system, white, 10 strips with 10 markers per card, 5 ... 5.2 mm stretchable

plain	**793-5501**	5

WMB Multi marking system, plain, 10 strips with 10 markers per card, 5 ... 5.2 mm stretchable



yellow	**793-5501/000-002**	
red	**793-5501/000-005**	
blue	**793-5501/000-006**	
gray	**793-5501/000-007**	
orange	**793-5501/000-012**	
light green	**793-5501/000-017**	
green	**793-5501/000-023**	
violet	**793-5501/000-024**	
		5

Accessories for Carrier terminal blocks

Appropriate marking system:
WMB (see Section 13)

2-conductor carrier terminal block,
❶ 0.08 ... 2.5 mm² / 28 ... 12 AWG
Terminal block width 5 mm / 0.197 inch



gray	**280-916**	100

End and intermediate plate, 2.5 mm thick



orange	**280-309**	100 (4x25)
gray	**280-308**	100 (4x25)

3-conductor carrier terminal block,
❷ 0.08 ... 2.5 mm² / 28 ... 12 AWG
Terminal block width 5 mm / 0.197 inch



gray	**280-610**	100

End and intermediate plate, 2.5 mm thick



orange	**280-326**	100 (4x25)
gray	**280-324**	100 (4x25)

4-conductor carrier terminal block,
❸ 0.08 ... 2.5 mm² / 28 ... 12 AWG
Terminal block width 5 mm / 0.197 inch



gray	**280-816**	100

End and intermediate plate, 2.5 mm thick



orange	**280-315**	100 (4x25)
gray	**280-314**	100 (4x25)

Comb-style jumper bar, insulated, I_N = I_N terminal block



2-way	**280-482**	200 (8x25)
3-way	**280-483**	200 (8x25)

Comb-style jumper bar, insulated, I_N = I_N terminal block



10-way	**280-490**	50 (2x25)

Alternate comb-style jumper bar, insulated, I_N = I_N terminal block



2-way	**280-492**	200 (8x25)

2-way	**280-432**	1
3-way	**280-433**	1

Operating tool, of insulating material



10-way	**280-440**	1

Wire commoning chain, insulated, 50 connections, I_N 8 A



black	**210-103**	1

❹ Electrical ratings are given by the fuse or LED nominal voltage (see page 292).

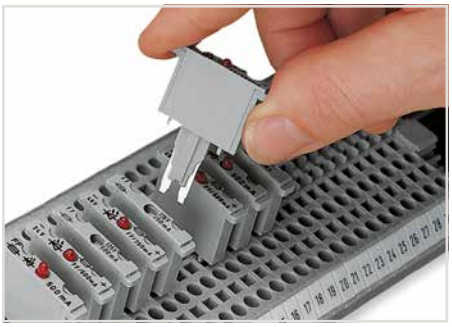

Using fuse plugs with rail-mount terminal blocks (280/281 and 769 Series) for control circuit protection is highly advantageous because the function and wiring levels are separated:
- No additional cost for assembly and wiring
- No risk of accidental contact with live parts when disconnecting the fuse plug
- Quick plug replacement in case of a blown fuse
- The fuse plug can be removed by service personnel
- No unintentional reclosing of the circuit by another person

Additional advantages:
- Terminal blocks/plugs provide ultra high-density wiring in a width of just 5 mm
- Optional LED indicates blown fuse

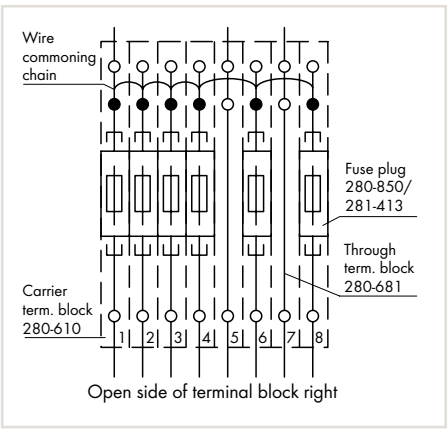

Fuse protection of individual outputs – supply via wire commoning chain

Fuse Terminal Blocks for Class CC Fuses and 10 x 38 mm (13⁄32" x 1½") Cylindrical Fuses

16 mm², 811 Series

2.5 … 16 mm²	**16 … 6 AWG**	**2.5 … 16 mm²**	**16 … 6 AWG**	**2.5 … 16 mm²**	**16 … 6 AWG**
1000 VDC, 32 A	**1000 VDC, 30 A**	**690 VAC, 32 A**	**600 VAC, 30 A**	**–**	**600 V, 30 A**
		1000 VDC, 32 A	**750 VAC, 30 A**	**–**	**600 V, 30 A**
			1000 VDC, 30 A		
Terminal block width 17.5 mm / 0.689 inch		**Terminal block width 17.5 mm / 0.689 inch**		**Terminal block width 17.5 mm / 0.689 inch**	
12 … 13 mm / 0.47 … 0.51 inch		**12 … 13 mm / 0.47 … 0.51 inch**		**12 … 13 mm / 0.47 … 0.51 inch**	







5

	Item No.	Pack. Unit
Fuse terminal block for (10 x 38) mm (13⁄32" x 1½") cylindrical fuses, for photovoltaic applications, without blown fuse indication, for DIN-35 rail, light gray		
◯ 1-pole	**811-316**	12
Fuse terminal block for (10 x 38) mm (13⁄32" x 1½") cylindrical fuses, for photovoltaic applications, with blown fuse indication, 230 … 1000 VDC, for DIN-35 rail, light gray		
◯ 1-pole	**811-317**	12
Cylindrical fuses are not offered by WAGO.		
Operating temperature range: −35 °C … +85 °C		
Electrical ratings are given by the fuse and blown fuse indication.		

	Item No.	Pack. Unit
Fuse terminal block for (10 x 38) mm (13⁄32" x 1½") cylindrical fuses, without blown fuse indication, for DIN-35 rail, light gray		
◯ 1-pole	**811-310**	12
◯ 2-pole	**811-320**	6
◯ 3-pole	**811-330**	4
Fuse terminal block for (10 x 38) mm (13⁄32" x 1½") cylindrical fuses, with blown fuse indication, 90 … 600 VAC, 115 … 600 VDC, for DIN-35 rail, light gray		
◯ 1-pole	**811-311**	12
◯ 2-pole	**811-321**	6
◯ 3-pole	**811-331**	4
Fuse terminal block for (10 x 38) mm (13⁄32" x 1½") cylindrical fuses, with blown fuse indication, 24 VDC, for DIN-35 rail, light gray		
◯ 1-pole	**811-314**	12
Cylindrical fuses are not offered by WAGO.		
Operating temperature range: −35 °C … +85 °C		
Electrical ratings are given by the fuse and blown fuse indication.		

	Item No.	Pack. Unit
Fuse terminal block for class CC fuses, without blown fuse indication, for DIN-35 rail, light gray		
◯ 1-pole	**811-410**	12
◯ 2-pole	**811-420**	6
◯ 3-pole	**811-430**	4
Fuse terminal block for class CC fuses, with blown fuse indication, 90 … 600 VAC, 115 … 600 VDC, for DIN-35 rail, light gray		
◯ 1-pole	**811-411**	12
◯ 2-pole	**811-421**	6
◯ 3-pole	**811-431**	4
Fuse terminal block for class CC fuses, with blown fuse indication, 24 VDC, for DIN-35 rail, light gray		
◯ 1-pole	**811-414**	12
Cylindrical fuses are not offered by WAGO.		
Operating temperature range: −35 °C … +85 °C		
Electrical ratings are given by the fuse and blown fuse indication.		

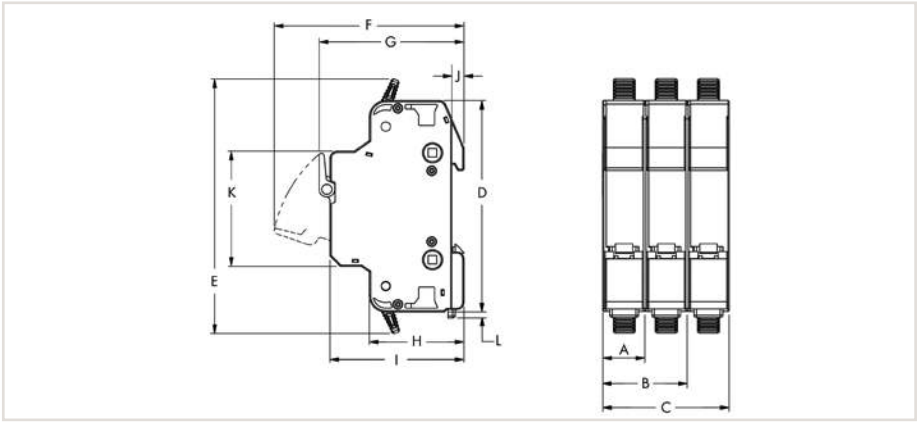

Dimension	mm (inch)
A	17.3 (0.68)
B	34.6 (1.36)
C	51.9 (2.04)
D	87 (3.43)
E	104.9 (4.13)
F	78.3 (3.08)
G	59.7 (2.35)
H	39 (1.54)
I	55.2 (2.17)
J	5 (0.2)
K	47.4 (1.87)
L	2.5 (0.1)

Overview of certification organizations, see page 654

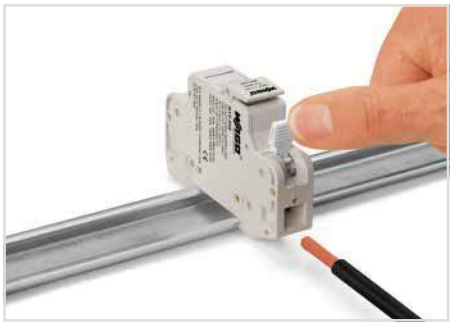

CAGE CLAMP® connection
Inserting a conductor via screwdriver.
Opening the clamping unit via integrated lever.



Terminating ferruled conductors up to 10 mm² (8 AWG).



Opening/closing lever via screwdriver.



Inserting a fuse.



Removing a terminal block from the carrier rail.

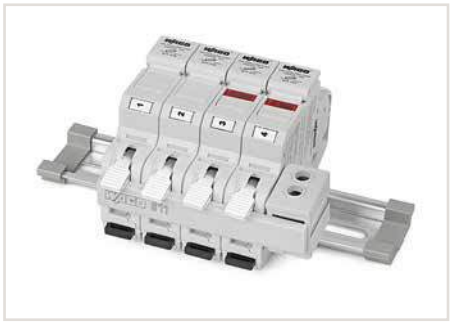

WMB marking location for convenient identification



Marker carriers (285-442) for continuous marking strips



Jumper bar for quick and convenient commoning



Creating a 2- or 3-pole fuse terminal block via coupling kit.

811 Series Accessories

Push-in type jumper bar, insulated, I_N 63 A, 1000 V, light gray			
	2-way	**811-472**	50 (5x10)
	3-way	**811-473**	40 (4x10)
	4-way	**811-474**	40 (4x10)
	5-way	**811-475**	40 (4x10)
	6-way	**811-476**	30 (3x10)
	7-way	**811-477**	20 (2x10)
	8-way	**811-478**	20 (2x10)
	9-way	**811-479**	20 (2x10)
	10-way	**811-480**	20 (2x10)
	11-way	**811-481**	20 (2x10)
	12-way	**811-482**	20 (2x10)
Supply module, 35 mm², 600 VAC, 1000 VDC			
		**811-471**	16 (4x4)
Test plug, with 500 mm cable, 2 mm Ø, max. 42 V			
	red	**210-136**	50
Coupling kit, for 12 poles			
		**811-612**	1
Marker carrier, 10.4 mm wide			
	gray	**285-442**	25
Marking strip, plain, 11 mm wide, 50 m roll			
	white	**2009-110**	1
WMB Multi marking system, white, 10 strips with 10 markers per card, 5 ... 5.2 mm stretchable			
	plain	**793-5501**	5
Screwless end stop, for DIN-35 rail, gray			
	6 mm wide	**249-116**	100 (4x25)
	10 mm wide	**249-117**	50 (2x25)
Twin ferrule, only for 811 Series, insulated, Length l = 12 mm,			
	sleeve for 2 x 2.5 mm² / 14 AWG		
	blue	**216-545**	100
	sleeve for 2 x 4 mm² / 12 AWG		
	gray	**216-546**	100
	sleeve for 2 x 6 mm² / 10 AWG		
	yellow	**216-547**	100

Application Notes on Terminal Blocks for Miniature Metric Fuses

Terminal Blocks for Miniature Metric Fuses Tested per IEC or EN 60947-7-3/VDE 0611-6

When selecting miniature metric fuses, make sure that the maximum power loss listed below is not exceeded.
The power loss is determined per IEC or EN 60947-7-3/VDE 0611-6 at 23 °C.
The temperature rise of the terminal blocks must be checked according to their application and mounting.
Higher ambient temperatures represent an additional impact on miniature fuses. Therefore, in such applications, the rated current must be reduced if necessary.
More details are available from the manufacturers.

Miniature Metric Fuses, (5 x 20) mm

Series Item No.	Overload and Short-Circuit Protection		Short-Circuit Protection Only	
	Individual Arrangement	Block Arrangement	Individual Arrangement	Block Arrangement
Fuse terminal blocks (with screw cap), front-entry (5 x 20 mm)				
282-122 282-124	2.5 W	2.5 W	4 W	4 W
Fused disconnect terminal block with a pivoting fuse holder for miniature metric fuses (5 x 20 mm)				
281-611 281-616 281-611/281-541 281-611/281-542 281-611/281-417 281-611/281-418	2.5 W	1.6 W	4 W	4 W
Fuse plugs for miniature metric fuses (5 x 20 mm)				
281-511 281-512 281-512/281-501 281-512/281-418 281-512/281-417	2.5 W	1.6 W	4 W	4 W

Miniature Metric Fuses, (6.3 x 32) mm

Series Item No.	Overload and Short-Circuit Protection		Short-Circuit Protection Only	
	Individual Arrangement	Block Arrangement	Individual Arrangement	Block Arrangement
Fuse terminal blocks (with screw cap), front-entry (1/4" x 11/4" ≈ 6.3 x 32 mm)				
282-128 282-128/281-418 282-128/281-413 282-128/281-417	2.5 W	2.5 W	4 W	4 W
Fused disconnect terminal block with a pivoting fuse holder for miniature metric fuses (1/4" x 11/4" ≈ 6.3 x 32 mm)				
281-623 281-623/281-541 281-623/281-542 281-623/281-417 281-623/281-418	2.5 W	1.6 W	4 W	2.5 W

Individually arranged fuse terminal blocks

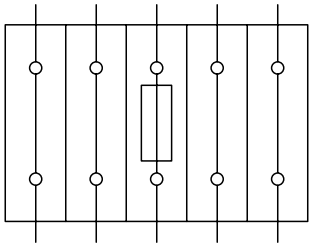

Terminal block assembly including
one fuse terminal block and through terminal blocks

Fuse terminal block in a group

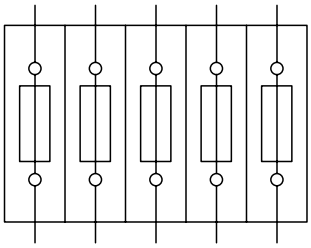

Terminal block assembly including
five fuse terminal blocks

Sensor and Actuator Terminal Blocks, 280 Series

Description and Installation

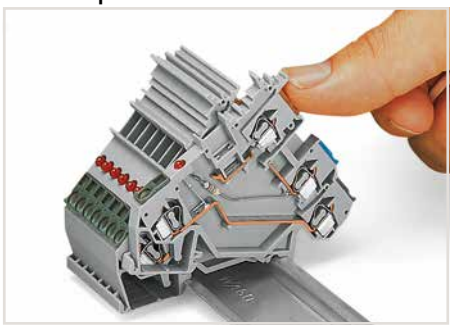

Snapping a terminal block onto the carrier rail – terminal blocks with a grounding foot automatically establish a direct contact to the rail.

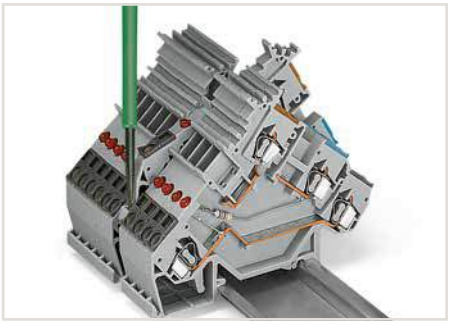

Removing a terminal block from the carrier rail.
Notice: Remove jumper contacts first.

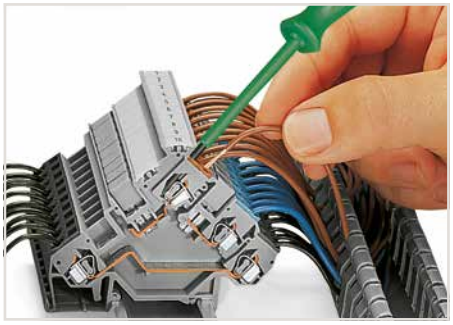

CAGE CLAMP® connection
Inserting a conductor via straight operating tool (210-720).

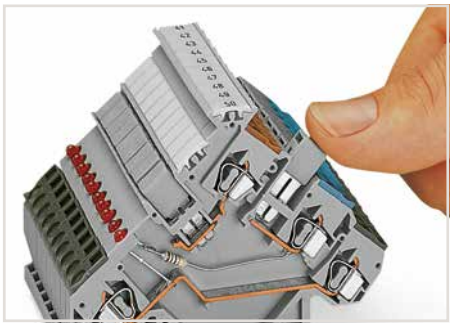

Commoning using an adjacent jumper (280-402).
Push jumper down until fully inserted.

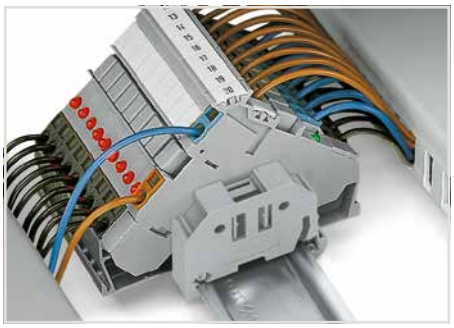

Sensor terminal blocks – power supply from control panel side

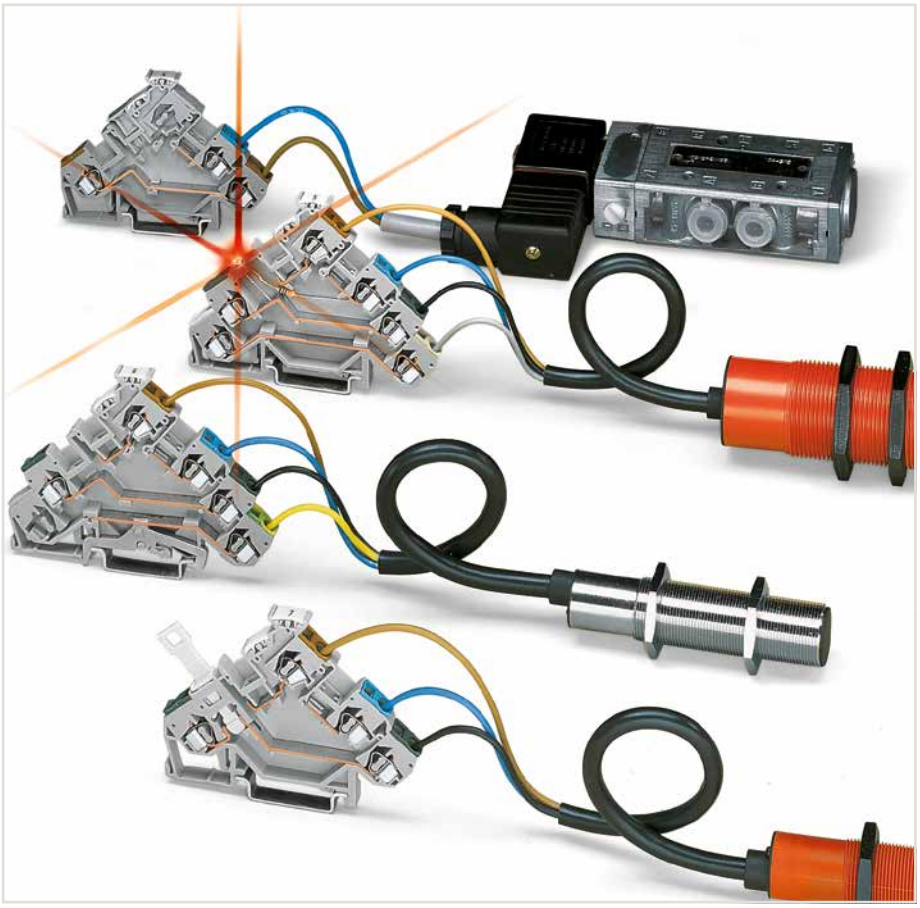

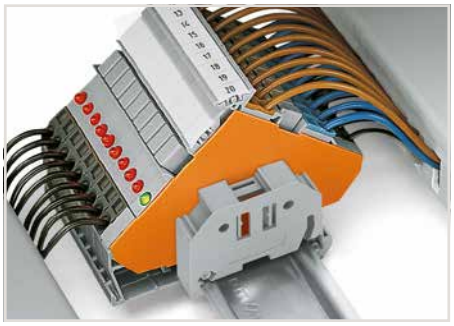

Sensor terminal blocks – power supply from sensor side

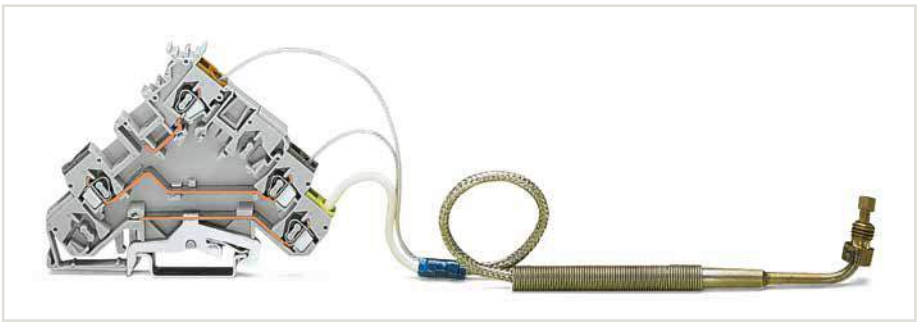

Actuator terminal block with thermocouple (shield connection)



CAGE CLAMP® terminates the following copper conductors:
solid



stranded



fine-stranded, also with tinned single strands

For aluminum conductors, see notes in Section 14. When using ferrules, the max. conductor cross section accommodated is one size smaller than max. rating of terminal block.

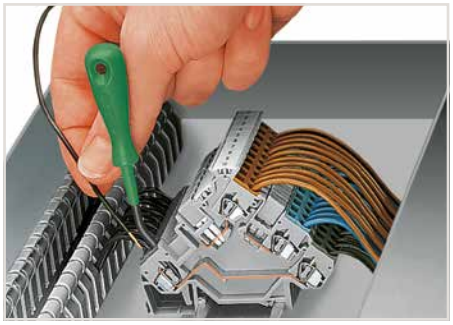

CAGE CLAMP® connection
Inserting a conductor via angled operating tool (210-658).

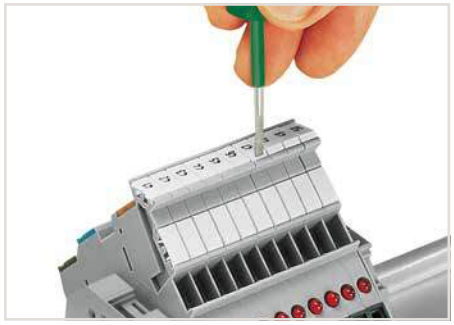

Labeling via WMB Multi Marking System.

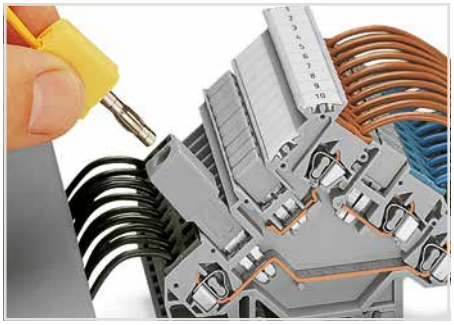

Testing via banana plug and test plug adapter (209-170).

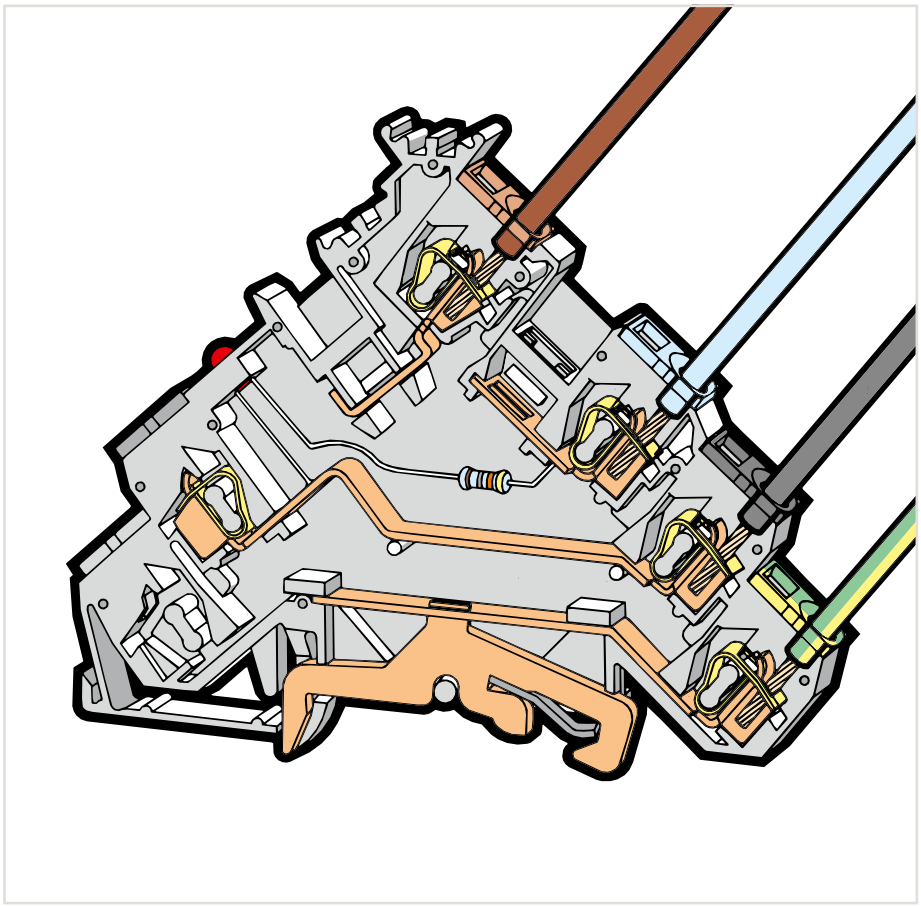



Testing via voltage tester directly on the current bar.



Actuator terminal blocks with fuse holders (281-511) – intermediate plates are required!

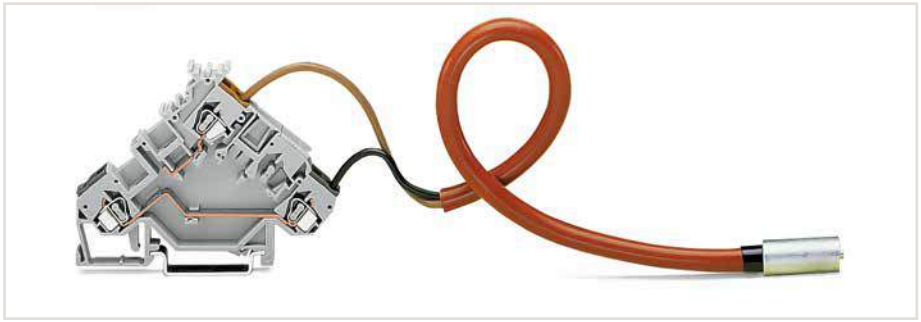

Actuator terminal block with thermocouple

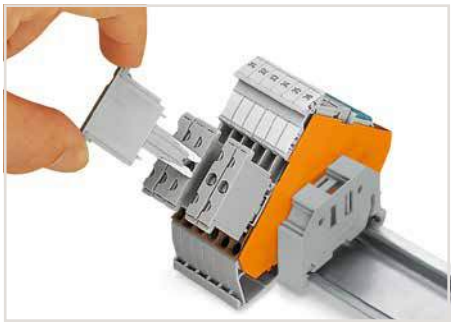

Actuator terminal blocks with component plugs (280-801)



fine-stranded, tip-bonded



fine-stranded, with ferrule (gastight crimped)



fine-stranded, with pin terminal (gastight crimped)

Sensor Terminal Blocks for 3-Conductor Sensors

2.5 mm², 280 Series

0.08 … 2.5 mm² / 400 V/6 kV/3 ❶ / I_N 20 A	28 … 12 AWG* / 300 V, 15 A / 300 V, 15 A	Terminal block width 5 mm / 0.197 inch; 8 … 9 mm / 0.31 … 0.35 inch
0.08 … 2.5 mm² / 250 V/4 kV/3 ❶ ❷ / I_N 6 A ❷	28 … 12 AWG* / 300 V, 6 A / 300 V, 15 A	Terminal block width 5 mm / 0.197 inch; 8 … 9 mm / 0.31 … 0.35 inch
0.08 … 2.5 mm² / 400 V/6 kV/3 ❶ / I_N 10 A	28 … 12 AWG* / 300 V, 10 A / 300 V, 15 A	Terminal block width 5 mm / 0.197 inch; 8 … 9 mm / 0.31 … 0.35 inch

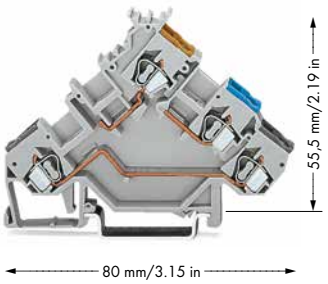

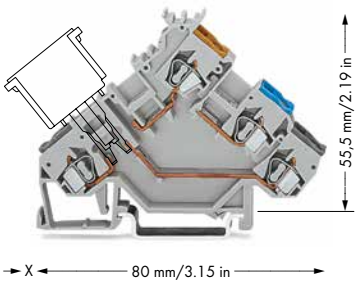

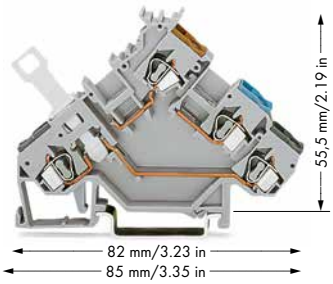

280-560



280-553

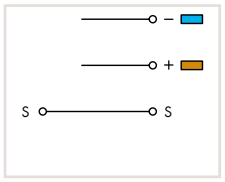

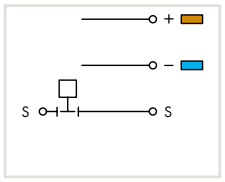

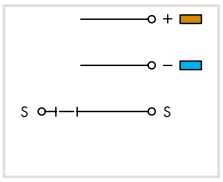

Item No.		Pack. Unit
Sensor terminal block		
◯	**280-560**	50
◯	**280-553**	50

Item No.		Pack. Unit
Sensor terminal block, for component plugs		
◯	**280-561** ❹	50

Item No.		Pack. Unit
Sensor disconnect terminal block, for signal interruption		
◯	**280-563**	50

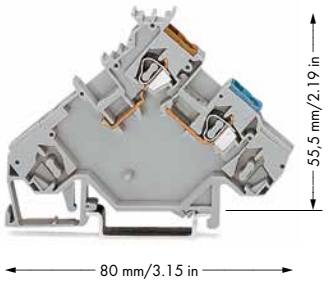

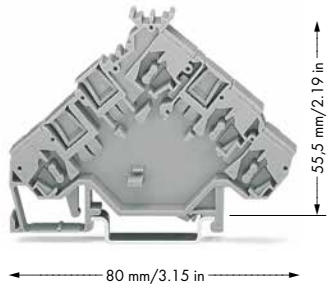

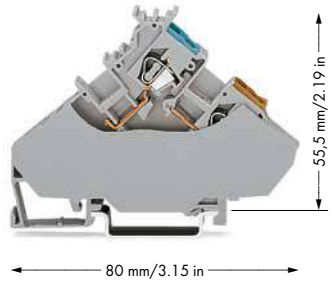



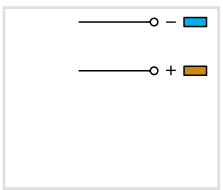

Item No.		Pack. Unit
Sensor supply terminal block, power supply from sensor side		
◯	**280-564**	10

Item No.			Pack. Unit
Spacer, same profile as 3-conductor sensor terminal blocks or corresponding actuator terminal blocks Spacers with the profile clearly differentiate between sensor or actuator terminal groups, e.g., of different power supply.			
◯ gray	**280-559**		50

Item No.		Pack. Unit
Sensor supply terminal block, power supply from control panel side, with end plate		
◯	**280-567**	20
Technical data:		
400 V/6 kV/3	I_N 20 A	

Overview of certification organizations, see page 654

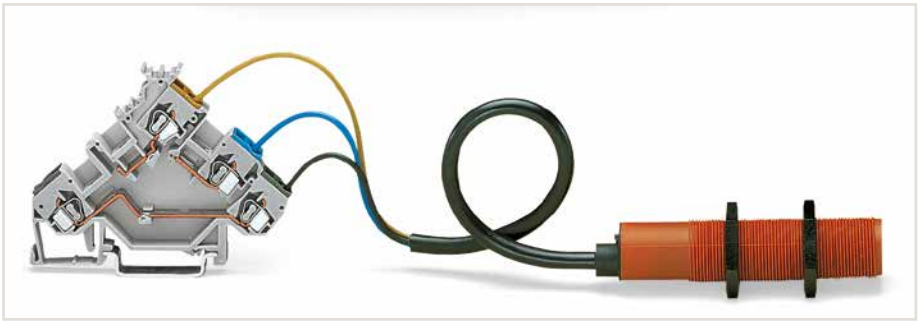

Sensor terminal block paired with a 3-conductor sensor

* 12 AWG: THHN, THWN

❶ 400 V/250 V = rated voltage
6 kV/4 kV = rated surge voltage
3 = pollution degree
(see Section 14)

❷ Electrical ratings are given by the fuse plug or empty component plug housing.

❸ For empty component plug housings, see Full Line Catalog, Interface Modules, Volume 4
x = 12 mm/0.472 inch
For fuse plugs (280-850), see page 288
x = 20 mm/0.787 inch

❹ See application notes for:
Insulation stop, page 331

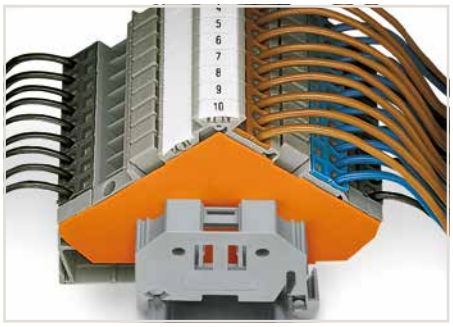

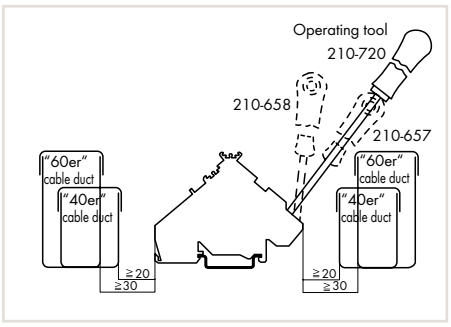

Min. mounting distance – terminal blocks to cable duct

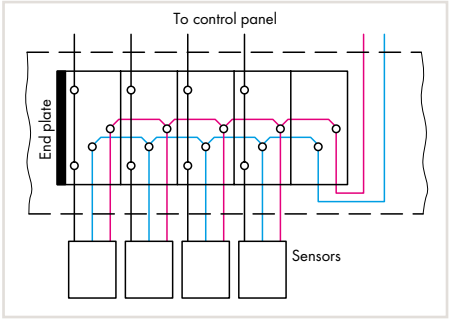

Power supply from sensor side

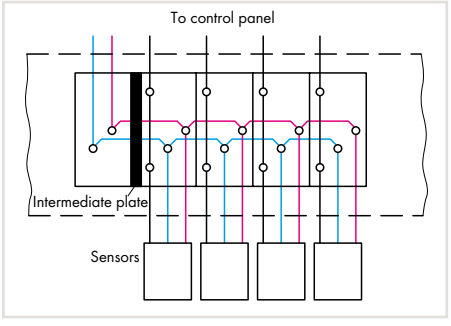

Power supply from control panel side

280 Series Accessories

Appropriate marking system:
WMB (see Section 13)

End and intermediate plate, 1 mm thick, for triple-deck terminal blocks			
	orange	**280-321**	100 (4x25)
	gray	**280-319**	100 (4x25)
Insulation stop, 5 pcs/strip, 0.08 ... 0.2 mm² "s" (0.14 mm² "f-st") ❹			
	white	**280-470**	200 (8x25)
Insulation stop, 5 pcs/strip, 0.25 ... 0.5 mm² ❹			
	light gray	**280-471**	200 (8x25)
Insulation stop, 5 pcs/strip, 0.75 ... 1 mm² ❹			
	dark gray	**280-472**	200 (8x25)
Adjacent jumper, insulated, $I_N = I_N$ terminal block			
	gray	**280-402**	200 (8x25)
Screwless end stop, for DIN-35 rail, 6 mm wide			
	gray	**249-116**	100 (4x25)
Screwless end stop, for DIN-35 rail, 10 mm wide			
	gray	**249-117**	50 (2x25)

Sensor LED Terminal Blocks for 3-Conductor Sensors

2.5 mm², 280 Series

0.08 … 2.5 mm²	28 … 12 AWG*
24 VDC ❶	24 V, 15 A
20 A	300 V, 15 A
Terminal block width 5 mm / 0.197 inch	
8 … 9 mm / 0.31 … 0.35 inch	

0.08 … 2.5 mm²	28 … 12 AWG*
24 VDC ❶	24 V, 15 A
20 A	300 V, 15 A
Terminal block width 5 mm / 0.197 inch	
8 … 9 mm / 0.31 … 0.35 inch	

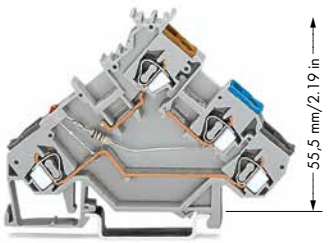

280-560/281-434

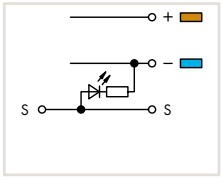

280-561/281-413

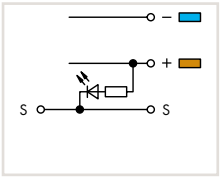

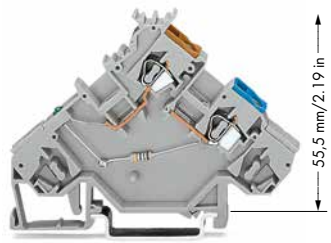

280-564/281-483

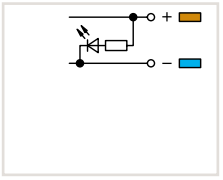

280-566/281-496

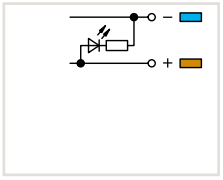

* 12 AWG: THHN, THWN

❶ Other voltages are available upon request.

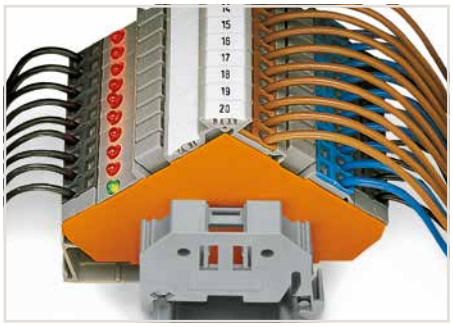

	Item No.	Pack. Unit
Sensor LED terminal block, for PNP (high-side) switching sensors, red LED, power consumption: 4.8 mA		
◯	**280-560/281-434**	50
Sensor LED terminal block, for NPN (low-side) switching sensors, red LED, power consumption: 4.8 mA		
◯	**280-561/281-413**	50

	Item No.	Pack. Unit
Sensor LED supply terminal block, power supply from sensor side, for PNP (high-side) switching sensors, green LED, power consumption: 4.8 mA		
◯	**280-564/281-483**	10
Sensor LED supply terminal block, power supply from sensor side, for NPN (low-side) switching sensors, green LED, power consumption: 4.8 mA		
◯	**280-566/281-496**	10

280 Series Accessories

Appropriate marking system:
WMB (see Section 13)

End and intermediate plate, 1 mm thick, for triple-deck terminal blocks			
	orange	**280-321**	100 (4x25)
	gray	**280-319**	100 (4x25)
Insulation stop, 5 pcs/strip, 0.08 … 0.2 mm² "s" (0.14 mm² "f-st")			
	white	**280-470**	200 (8x25)

Insulation stop, 5 pcs/strip, 0.25 … 0.5 mm²			
	light gray	**280-471**	200 (8x25)
Insulation stop, 5 pcs/strip, 0.75 … 1 mm²			
	dark gray	**280-472**	200 (8x25)

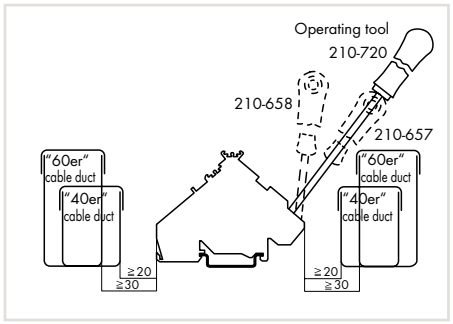

Min. mounting distance – terminal blocks to cable duct

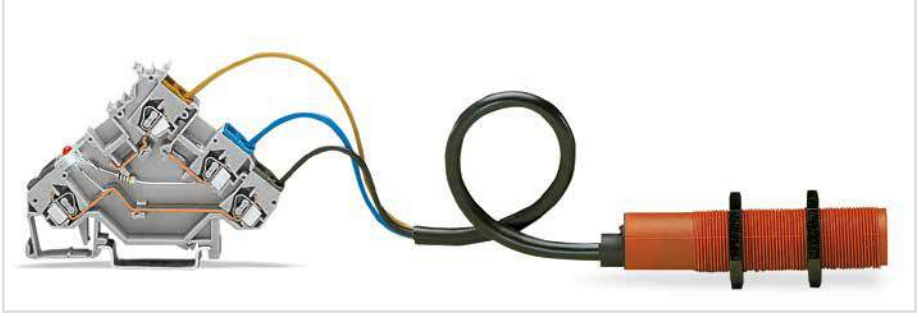

Sensor LED terminal block paired with a 3-conductor sensor

Sensor LED Terminal Blocks for 4-Conductor Sensors

2.5 mm², 280 Series

0.08 … 2.5 mm²	28 … 12 AWG*
24 VDC ❶	24 V, 15 A
20 A	300 V, 15 A
Terminal block width 5 mm / 0.197 inch	
8 … 9 mm / 0.31 … 0.35 inch	

0.08 … 2.5 mm²	28 … 12 AWG*
24 VDC ❶	24 V, 15 A
20 A	300 V, 15 A
Terminal block width 5 mm / 0.197 inch	
8 … 9 mm / 0.31 … 0.35 inch	



280-570/281-434 280-571/281-413

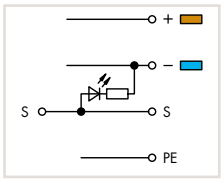

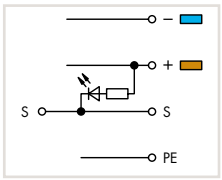



280-574/281-483 280-576/281-496

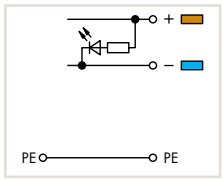

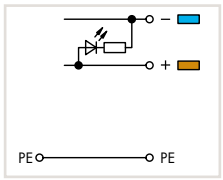

Item No.	Pack. Unit	Item No.	Pack. Unit
Sensor LED terminal block, for PNP (high-side) switching sensors, red LED, power consumption: 4.8 mA		Sensor LED supply terminal block, power supply from sensor side, for PNP (high-side) switching sensors, green LED, power consumption: 4.8 mA	
280-570/281-434	50	**280-574/281-483**	10
Sensor LED terminal block, for NPN (low-side) switching sensors, red LED, power consumption: 4.8 mA		Sensor LED supply terminal block, power supply from sensor side, for NPN (low-side) switching sensors, green LED, power consumption: 4.8 mA	
280-571/281-413	50	**280-576/281-496**	10
		Sensor LED supply terminal block, power supply from control panel side, with end plate, for PNP (high-side) switching sensors, green LED, power consumption: 4.8 mA Terminal block width: 6 mm (0.236 inch)	
		280-577/281-496	20

280 Series Accessories

Appropriate marking system:
WMB (see Section 13)

End and intermediate plate, 1 mm thick, for quadruple-deck terminal blocks			
orange	**280-323**	100 (4x25)	
gray	**280-320**	100 (4x25)	

* 12 AWG: THHN, THWN

❶ Other voltages are available upon request.



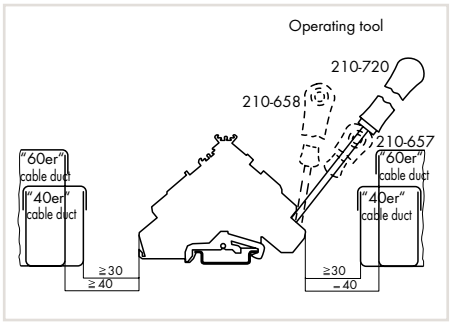

Min. mounting distance – terminal blocks to cable duct

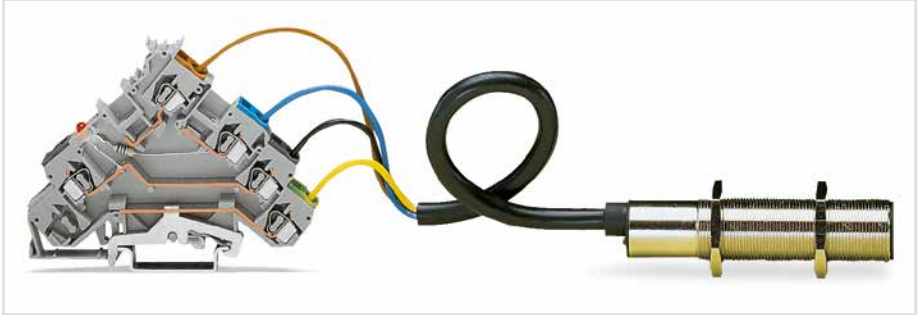

Sensor LED terminal block paired with a 3-conductor sensor (ground connection)

Sensor Terminal Blocks with Ground Connection for 3-Conductor Sensors

2.5 mm², 280 Series

0.08 … 2.5 mm²	28 … 12 AWG*	
400 V/6 kV/3 ❶	300 V, 15 A	
I_N 20 A	300 V, 15 A	
Terminal block width 5 mm / 0.197 inch		
8 … 9 mm / 0.31 … 0.35 inch		

0.08 … 2.5 mm²	28 … 12 AWG*	
250 V/4 kV/3 ❶❷	300 V, 6 A	
I_N 6 A	300 V, 15 A	
Terminal block width 5 mm / 0.197 inch		
8 … 9 mm / 0.31 … 0.35 inch		

0.08 … 2.5 mm²	28 … 12 AWG*	
400 V/6 kV/3 ❶	300 V, 10 A	
I_N 10 A	300 V, 15 A	
Terminal block width 5 mm / 0.197 inch		
8 … 9 mm / 0.31 … 0.35 inch		

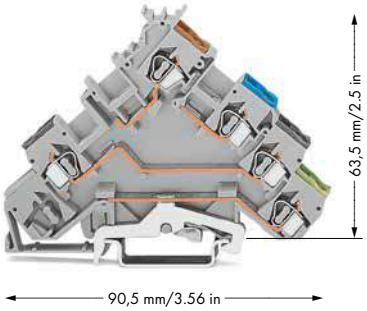

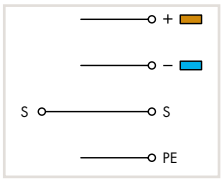

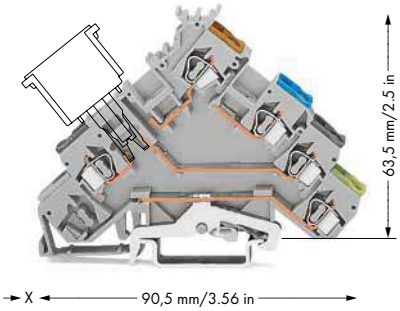

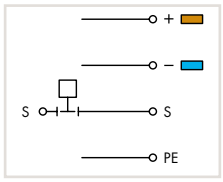

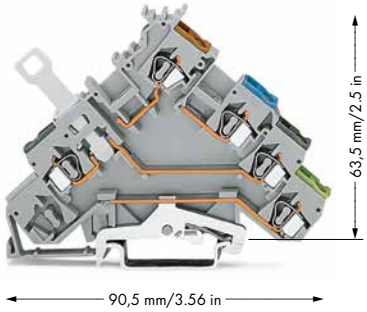

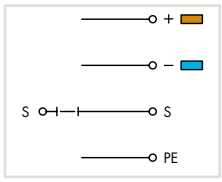

Item No.	Pack. Unit	Description
280-570	50	Sensor terminal block, with ground connection

Item No.	Pack. Unit	Description
280-571 ❸	50	Sensor terminal block, with ground connection, for component plugs

Item No.	Pack. Unit	Description
280-573	50	Sensor disconnect terminal block, with ground connection, for signal interruption

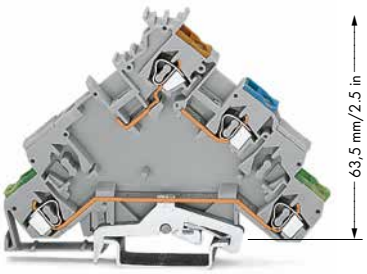

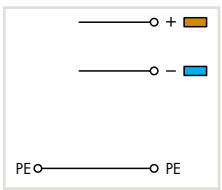



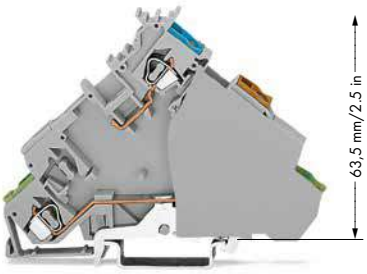

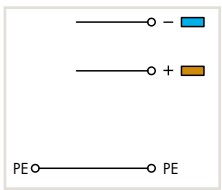

Item No.	Pack. Unit	Description
280-574	10	Sensor supply terminal block, with ground connection, power supply from sensor side

Item No.	Pack. Unit	Description
280-582	50	Spacer, same profile as 4-conductor sensor terminal blocks, 3-conductor sensor terminal blocks with ground connection or corresponding actuator terminal blocks Spacers with the profile clearly differentiate between sensor or actuator terminal groups, e.g., of different power supply.

Item No.	Pack. Unit	Description
280-577	20	Sensor supply terminal block, with ground connection, power supply from control panel side, with end plate
		Technical data:
		400 V/6 kV/3 I_N 20 A

Overview of certification organizations, see page 654

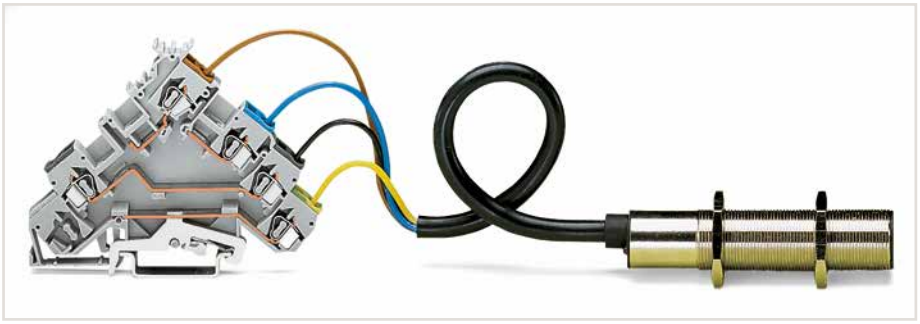

Sensor terminal block paired with a 3-conductor sensor (ground connection)

* 12 AWG: THHN, THWN

❶ 400 V/250 V = rated voltage
6 kV/4 kV = rated surge voltage
3 = pollution degree
(see Section 14)

❷ Electrical ratings are given by the fuse plug or empty component plug housing.

❸ For empty component plug housings, see Full Line Catalog, Interface Modules, Volume 4
x = 12 mm/0.472 inch
For fuse plugs (280-850), see page 288
x = 20 mm/0.787 inch

❹ See application notes for:
Insulation stop, page 331

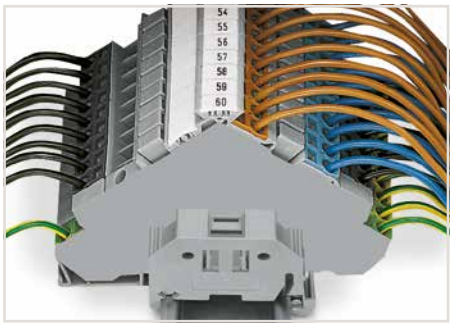

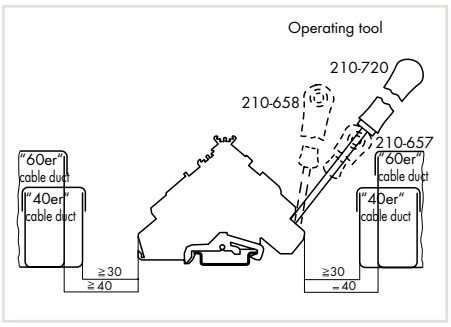

Min. mounting distance – terminal blocks to cable duct

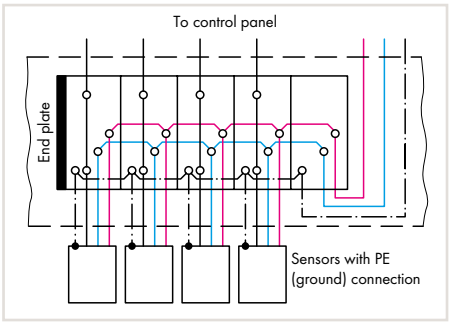

Power supply from sensor side

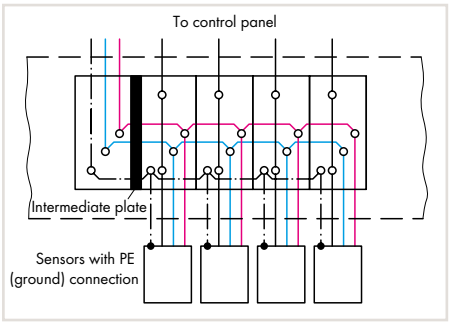

Power supply from control panel side

280 Series Accessories

Appropriate marking system:
WMB (see Section 13)

End and intermediate plate, 1 mm thick, for quadruple-deck terminal blocks			
	orange	**280-323**	100 (4x25)
	gray	**280-320**	100 (4x25)
Insulation stop, 5 pcs/strip, 0.08 ... 0.2 mm² "s" (0.14 mm² "f-st") ❹			
	white	**280-470**	200 (8x25)
Insulation stop, 5 pcs/strip, 0.25 ... 0.5 mm² ❹			
	light gray	**280-471**	200 (8x25)
Insulation stop, 5 pcs/strip, 0.75 ... 1 mm² ❹			
	dark gray	**280-472**	200 (8x25)
Adjacent jumper, insulated, $I_N = I_N$ terminal block			
	gray	**280-402**	200 (8x25)
Screwless end stop, for DIN-35 rail, 6 mm wide			
	gray	**249-116**	100 (4x25)
Screwless end stop, for DIN-35 rail, 10 mm wide			
	gray	**249-117**	50 (2x25)

Sensor Terminal Blocks for 4-Conductor Sensors

2.5 mm², 280 Series

0.08 … 2.5 mm²	28 … 12 AWG*	
400 V/6 kV/3 ❶	300 V, 15 A	
I_N 20 A	300 V, 15 A	
Terminal block width 5 mm / 0.197 inch		
8 … 9 mm / 0.31 … 0.35 inch		

0.08 … 2.5 mm²	28 … 12 AWG*	
125 V/5 A ❷	300 V, 6 A	
250 V/6.3 A ❷	300 V, 15 A	
Terminal block width 5 mm / 0.197 inch		
8 … 9 mm / 0.31 … 0.35 inch		

0.08 … 2.5 mm²	28 … 12 AWG*	
400 V/6 kV/3 ❶	24 V, 15 A	
I_N 20 A	300 V, 15 A	
Terminal block width 6 mm / 0.236 inch		
8 … 9 mm / 0.31 … 0.35 inch		

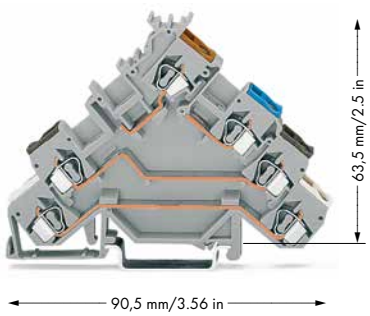

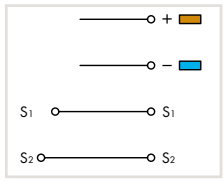

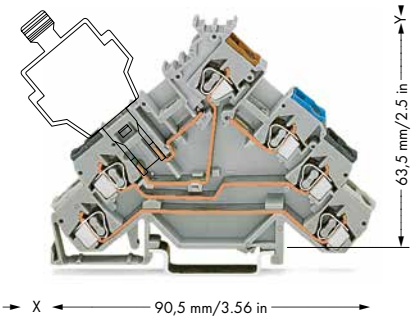

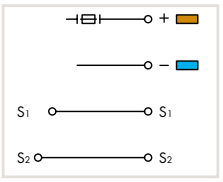

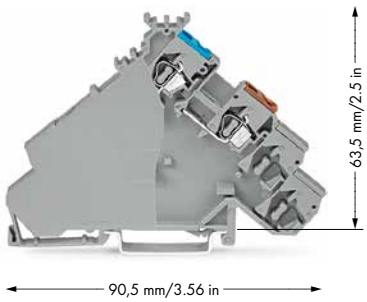



Item No.	Pack. Unit
Sensor terminal block	
280-580	50

Item No.	Pack. Unit
Sensor terminal block, for fuse plugs, for PNP (high-side) switching sensors, without end plate	
280-588 ❸	50

Item No.	Pack. Unit
Sensor supply terminal block, power supply from control panel side, with end plate	
280-587	20

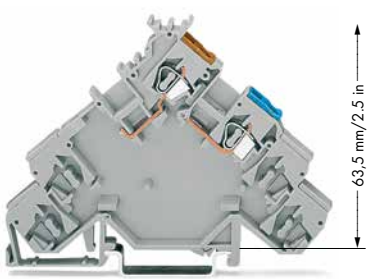



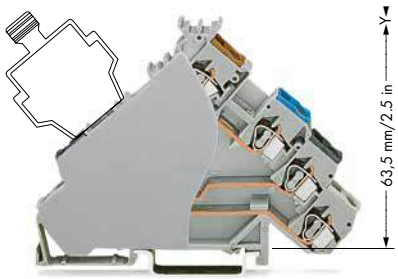



Item No.	Pack. Unit
Sensor supply terminal block, power supply from sensor side, without end plate	
280-584	10

Item No.	Pack. Unit
Sensor terminal block, for fuse plugs, for PNP (high-side) switching sensors, with gray end plate	
280-588/280-320	50
with orange end plate	
280-588/280-323	50

Overview of certification organizations, see page 654



Sensor terminal block paired with a 4-conductor sensor

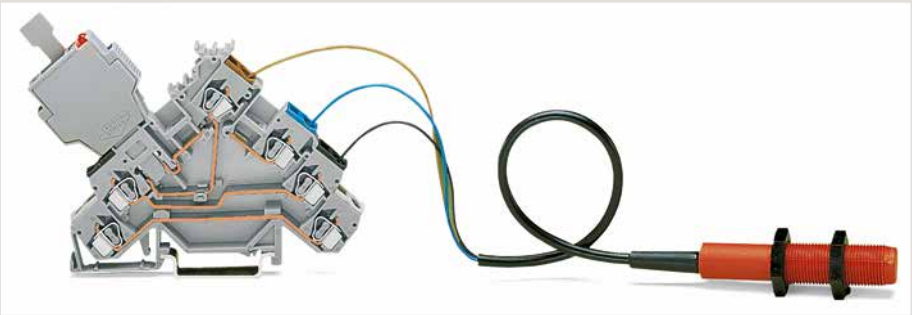

Sensor terminal block (with a fuse plug) paired with a 3-conductor sensor



The fuse plug is 1 mm wider than the terminal block, so an intermediate plate must be installed.

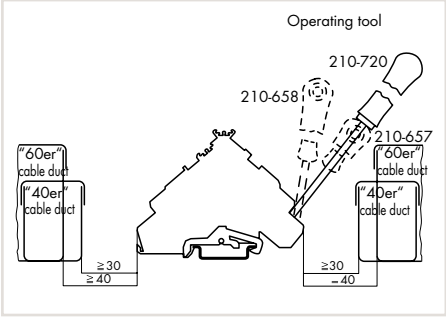

Min. mounting distance – terminal blocks to cable duct

* 12 AWG: THHN, THWN

❶ 400 V = rated voltage
6 kV = rated surge voltage
3 = pollution degree
(see Section 14)

❷ Electrical ratings are given by the fuse plug or empty component plug housing.

❸ For empty component plug housings, see Full Line Catalog, Interface Modules, Volume 4
x =12 mm/0.472 inch
For fuse plugs (281-511), see page 286
x = 15.5 mm/0.61 inch
y = 10 mm/0.394 inch

❹ See application notes for:
Insulation stop, page 331

5

280 Series Accessories

Appropriate marking system:
WMB (see Section 13)

End and intermediate plate, 1 mm thick, for quadruple-deck terminal blocks			
	orange	**280-323**	100 (4x25)
	gray	**280-320**	100 (4x25)
❹ Insulation stop, 5 pcs/strip, 0.08 ... 0.2 mm² "s" (0.14 mm² "f-st")			
	white	**280-470**	200 (8x25)
❹ Insulation stop, 5 pcs/strip, 0.25 ... 0.5 mm²			
	light gray	**280-471**	200 (8x25)
❹ Insulation stop, 5 pcs/strip, 0.75 ... 1 mm²			
	dark gray	**280-472**	200 (8x25)
Adjacent jumper, insulated, $I_N = I_N$ terminal block			
	gray	**280-402**	200 (8x25)
Screwless end stop, for DIN-35 rail, 6 mm wide			
	gray	**249-116**	100 (4x25)
Screwless end stop, for DIN-35 rail, 10 mm wide			
	gray	**249-117**	50 (2x25)

Sensor LED Terminal Blocks for 4-Conductor Sensors

2.5 mm², 280 Series

0.08 … 2.5 mm² / 28 … 12 AWG*	0.08 … 2.5 mm² / 28 … 12 AWG*
24 VDC ❶ / 24 V, 15 A	24 VDC ❶ / 24 V, 15 A
20 A	20 A / 300 V, 15 A
Terminal block width 5 mm / 0.197 inch	Terminal block width 5 mm / 0.197 inch
8 … 9 mm / 0.31 … 0.35 inch	8 … 9 mm / 0.31 … 0.35 inch

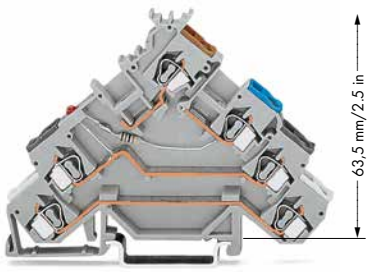

280-580/281-434 280-581/281-413

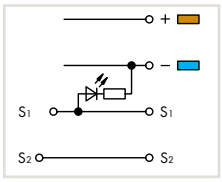

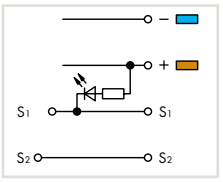

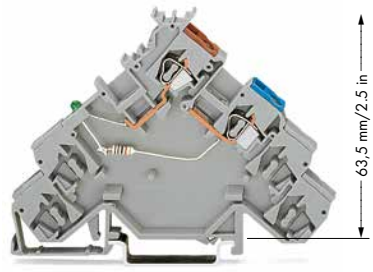

280-584/281-483 280-586/281-496

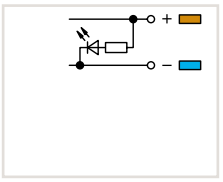

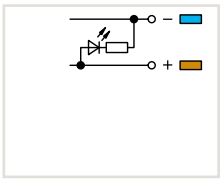

* 12 AWG: THHN, THWN

❶ Other voltages are available upon request.

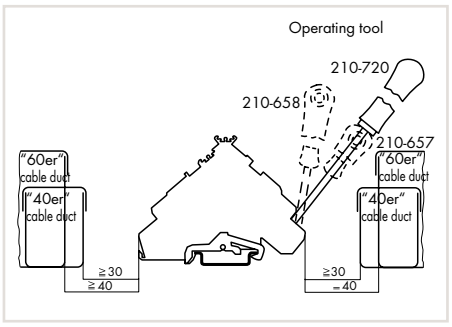

Min. mounting distance – terminal blocks to cable duct

Item No.	Pack. Unit	Item No.	Pack. Unit
Sensor LED terminal block, for PNP (high-side) switching sensors, red LED, power consumption: 4.8 mA		Sensor LED supply terminal block, power supply from sensor side, for PNP (high-side) switching sensors, green LED, power consumption: 4.8 mA	
280-580/281-434	50	**280-584/281-483**	10
Sensor LED terminal block, for NPN (low-side) switching sensors, red LED, power consumption: 4.8 mA		Sensor LED supply terminal block, power supply from sensor side, for NPN (low-side) switching sensors, green LED, power consumption: 4.8 mA	
280-581/281-413	50	**280-586/281-496**	10



280 Series Accessories

Appropriate marking system:
WMB (see Section 13)

End and intermediate plate, 1 mm thick, for quadruple-deck terminal blocks				Insulation stop, 5 pcs/strip, 0.25 … 0.5 mm²			
	orange	**280-323**	100 (4x25)				
	gray	**280-320**	100 (4x25)		light gray	**280-471**	200 (8x25)
Insulation stop, 5 pcs/strip, 0.08 … 0.2 mm² "s" (0.14 mm² "f-st")				Insulation stop, 5 pcs/strip, 0.75 … 1 mm²			
	white	**280-470**	200 (8x25)		dark gray	**280-472**	200 (8x25)

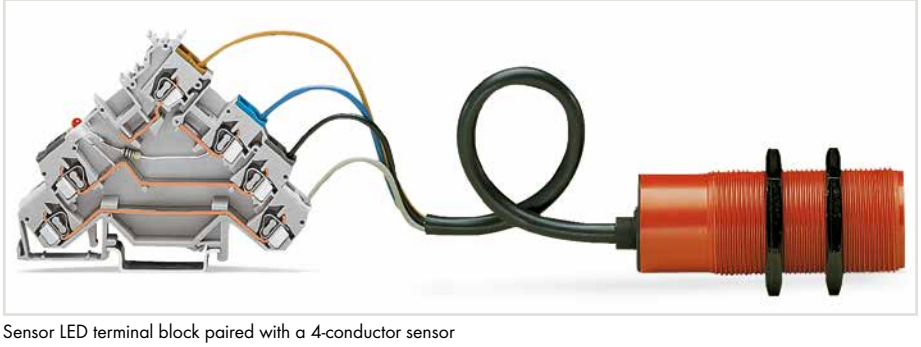

Sensor LED terminal block paired with a 4-conductor sensor

Actuator Terminal Blocks for Pressure Switches, Thermocouples

2.5 mm², 280 Series

0.08 … 2.5 mm²	28 … 12 AWG*
400 V/6 kV/3 ❶	300 V, 15 A
I_N 20 A	300 V, 15 A
Terminal block width 5 mm / 0.197 inch	
8 … 9 mm / 0.31 … 0.35 inch	

0.08 … 2.5 mm²	28 … 12 AWG*
400 V/6 kV/3 ❶	300 V, 15 A
I_N 20 A	300 V, 15 A
Terminal block width 6 mm / 0.236 inch	
8 … 9 mm / 0.31 … 0.35 inch	

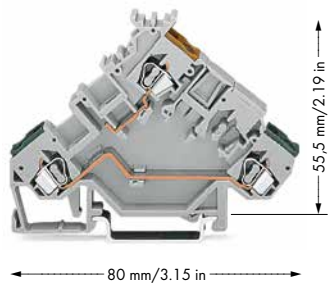

280-555

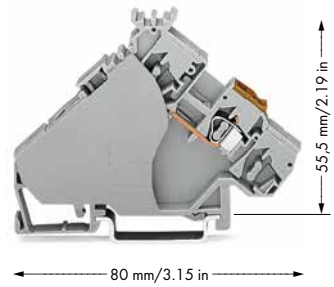

280-554

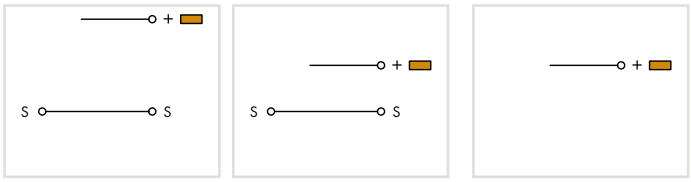

* 12 AWG: THHN, THWN

❶ 400 V = rated voltage
6 kV = rated surge voltage
3 = pollution degree
(see Section 14)

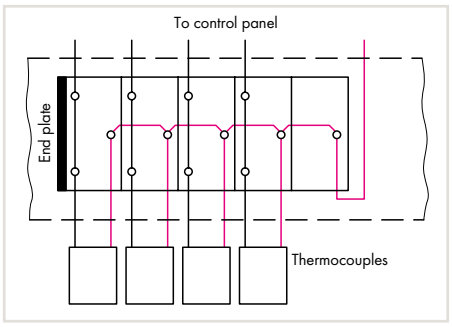

Power supply from actuator side

	Item No.	Pack. Unit
Actuator terminal block		
◯	**280-555**	50
Actuator terminal block, (no picture)		
◯	**280-554**	50

	Item No.	Pack. Unit
Actuator supply terminal block, in connection with 280-555: power supply from control cabinet side, in connection with 280-554: power supply from actuator side, with end plate		
◯	**280-556**	20

280 Series Accessories

Appropriate marking system:
WMB (see Section 13)

		Item No.	Pack. Unit
End and intermediate plate, 1 mm thick, for triple-deck terminal blocks			
	orange	**280-321**	100 (4x25)
	gray	**280-319**	100 (4x25)
Insulation stop, 5 pcs/strip, 0.25 … 0.5 mm²			
	light gray	**280-471**	200 (8x25)
Insulation stop, 5 pcs/strip, 0.08 … 0.2 mm² "s" (0.14 mm² "f-st")			
	white	**280-470**	200 (8x25)
Insulation stop, 5 pcs/strip, 0.75 … 1 mm²			
	dark gray	**280-472**	200 (8x25)
Screwless end stop, for DIN-35 rail, 6 mm wide			
	gray	**249-116**	100 (4x25)
Screwless end stop, for DIN-35 rail, 10 mm wide			
	gray	**249-117**	50 (2x25)

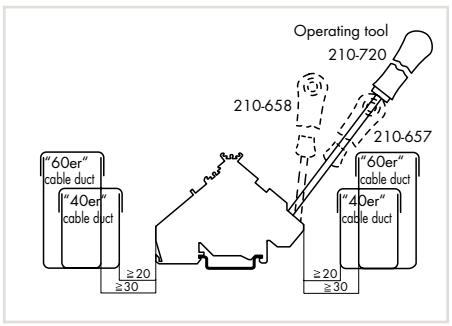

Min. mounting distance – terminal blocks to cable duct

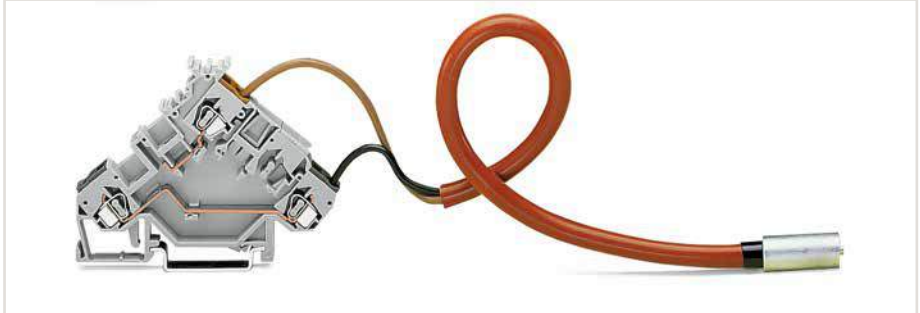

Actuator terminal block with thermocouple

Actuator Terminal Blocks for Magnetic Valves and Servomotors

2.5 mm², 280 Series

0.08 … 2.5 mm²	28 … 12 AWG*	0.08 … 2.5 mm²	28 … 12 AWG*	0.08 … 2.5 mm²	28 … 12 AWG*
400 V/6 kV/3; 20 A ❶ ❷	300 V, 15 A	125 V/5 A ❷	300 V, 6 A	400 V/6 kV/3 ❶	300 V, 10 A
250 V/4 kV/3; 20 A ❶ ❷	300 V, 15 A	250 V/6.3 A ❷	300 V, 15 A	I_N 10 A	300 V, 15 A
Terminal block width 5 mm / 0.197 inch		Terminal block width 5 mm / 0.197 inch		Terminal block width 5 mm / 0.197 inch	
8 … 9 mm / 0.31 … 0.35 inch		8 … 9 mm / 0.31 … 0.35 inch		8 … 9 mm / 0.31 … 0.35 inch	

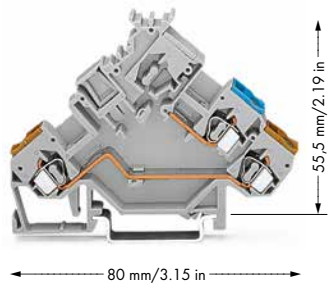

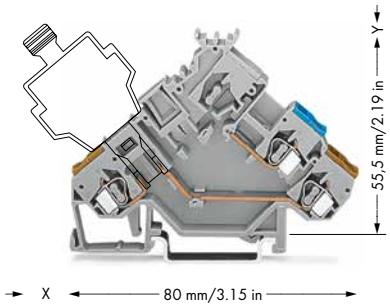

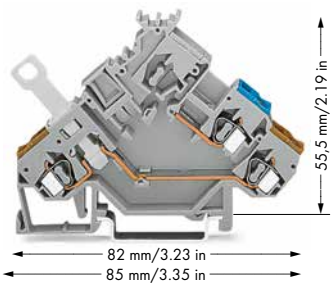

280-562 280-562/281-411

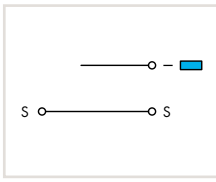

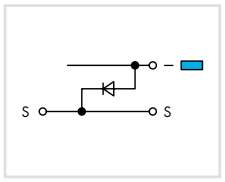

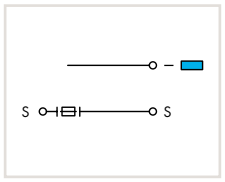

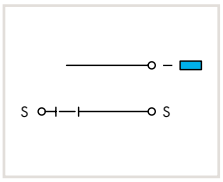

Item No.	Pack. Unit	Item No.	Pack. Unit	Item No.	Pack. Unit
Actuator terminal block		Actuator terminal block, for fuse plugs, for phase protection, without end plate		Actuator disconnect terminal block, for phase interruption	
280-562	50	**280-565** ❸	50	**280-566**	50
Actuator terminal block, with 1N4007 recovery diode					
280-562/281-411	50				

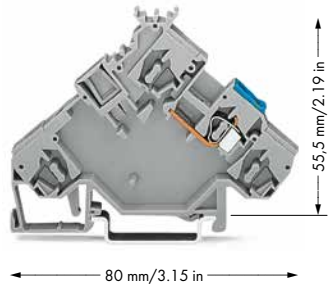

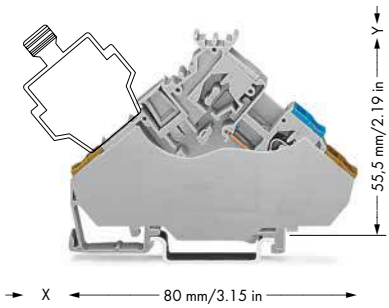

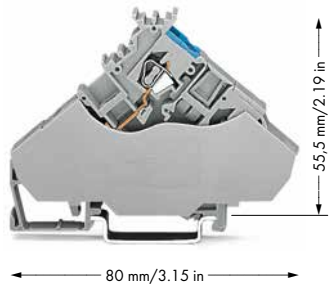

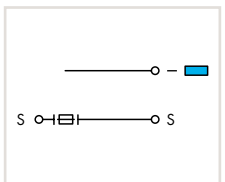

Item No.	Pack. Unit	Item No.	Pack. Unit	Item No.	Pack. Unit
Actuator supply terminal block, power supply form actuator side		Actuator terminal block, for fuse plugs, for phase protection, with gray end plate		Actuator supply terminal block, power supply from control panel side, with end plate	
280-592	10	**280-565/280-319**	50	**280-568**	20
		with orange end plate			
		280-565/280-321	50	Technical data:	
				400 V/6 kV/3	I_N 20 A



Actuator terminal block paired with a magnetic valve

* 12 AWG: THHN, THWN

❶ 400 V/250 V = rated voltage
6 kV/4 kV = rated surge voltage
3 = pollution degree
(see Section 14)

❷ Electrical ratings are given by the fuse plug or empty component plug housing.

❸ For empty component plug housings, see Full Line Catalog, Interface Modules, Volume 4
x =12 mm/0.472 inch
For fuse plugs (281-511), see page 286
x = 15.5 mm/0.61 inch
y = 10 mm/0.394 inch

❹ See application notes for:
Insulation stop, page 331



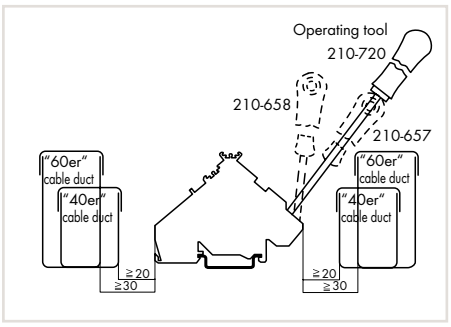

Min. mounting distance – terminal blocks to cable duct

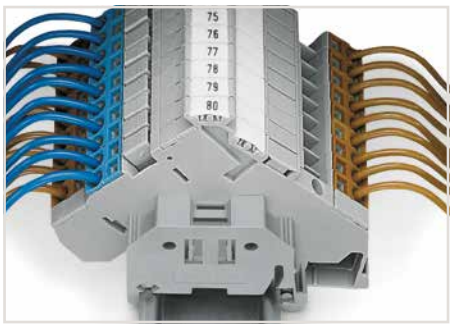

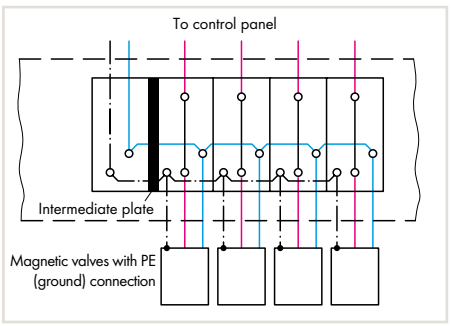

Power supply from control panel side

280 Series Accessories

Appropriate marking system:
WMB (see Section 13)

End and intermediate plate, 1 mm thick, for triple-deck terminal blocks			
	orange	**280-321**	100 (4x25)
	gray	**280-319**	100 (4x25)
Insulation stop, 5 pcs/strip, 0.08 ... 0.2 mm² "s" (0.14 mm² "f-st") ❹			
	white	**280-470**	200 (8x25)
Insulation stop, 5 pcs/strip, 0.25 ... 0.5 mm² ❹			
	light gray	**280-471**	200 (8x25)
Insulation stop, 5 pcs/strip, 0.75 ... 1 mm² ❹			
	dark gray	**280-472**	200 (8x25)
Adjacent jumper, insulated, $I_N = I_N$ terminal block			
	gray	**280-402**	200 (8x25)
Screwless end stop, for DIN-35 rail, 6 mm wide			
	gray	**249-116**	100 (4x25)
Screwless end stop, for DIN-35 rail, 10 mm wide			
	gray	**249-117**	50 (2x25)

Actuator Terminal Blocks with Ground Connection for Magnetic Valves and Servomotors

2.5 mm², 280 Series

0.08 ... 2.5 mm²	28 ... 12 AWG*	0.08 ... 2.5 mm²	28 ... 12 AWG*	0.08 ... 2.5 mm²	28 ... 12 AWG*
400 V/6 kV/3; 20 A ❶ ❷	300 V, 15 A	125 V/5 A ❷	300 V, 6 A	400 V/6 kV/3 ❶	300 V, 10 A
250 V/4 kV/3; 20 A ❶ ❷	300 V, 15 A	250 V/6.3 A ❷	300 V, 15 A	I_N 10 A	300 V, 15 A
Terminal block width 5 mm / 0.197 inch		Terminal block width 5 mm / 0.197 inch		Terminal block width 5 mm / 0.197 inch	
8 ... 9 mm / 0.31 ... 0.35 inch		8 ... 9 mm / 0.31 ... 0.35 inch		8 ... 9 mm / 0.31 ... 0.35 inch	

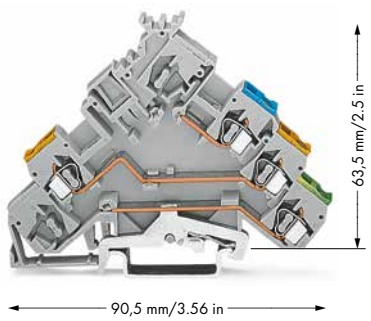

280-572

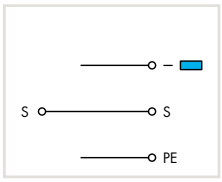

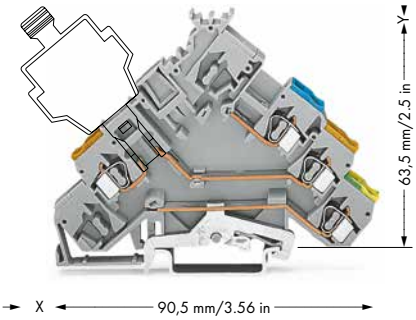

280-572/281-411

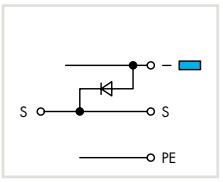

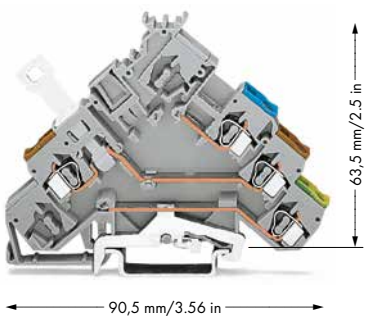

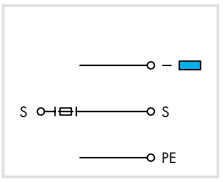



Item No.	Pack. Unit
Actuator terminal block, with ground connection	
280-572	50
Actuator terminal block, with ground connection, with 1N4007 recovery diode	
280-572/281-411	50

Item No.	Pack. Unit
Actuator terminal block, with ground connection, for fuse plugs, for phase protection, without end plate	
280-575 ❸	50

Item No.	Pack. Unit
Actuator disconnect terminal block, with ground connection, for phase interruption	
280-576	50

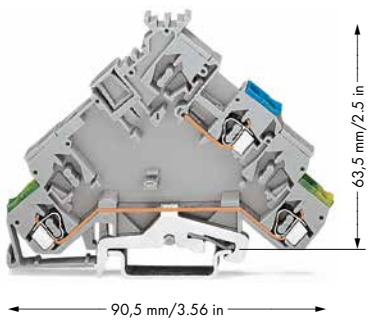

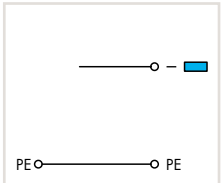

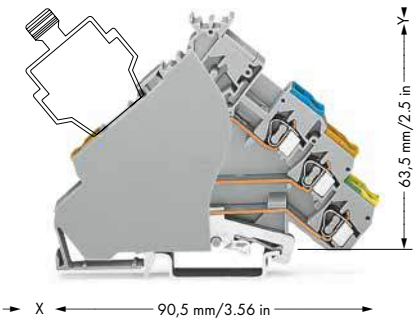



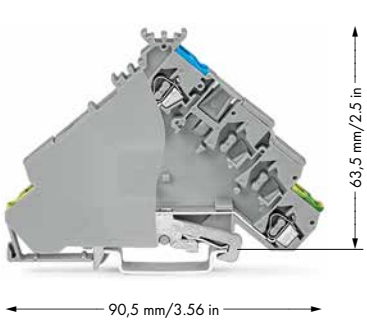

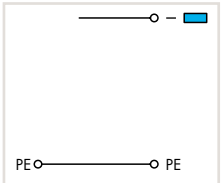

Item No.	Pack. Unit
Actuator supply terminal block, with ground connection, power supply form actuator side	
280-593	10

Item No.	Pack. Unit
Actuator terminal block, with ground connection, for fuse plugs, for phase protection, with gray end plate	
280-575/280-320	50
with orange end plate	
280-575/280-323	50

Item No.	Pack. Unit
Actuator supply terminal block, with ground connection, power supply from control panel side, with end plate	
280-578	20
Technical data:	
400 V/6 kV/3 I_N 20 A	

Overview of certification organizations, see page 654

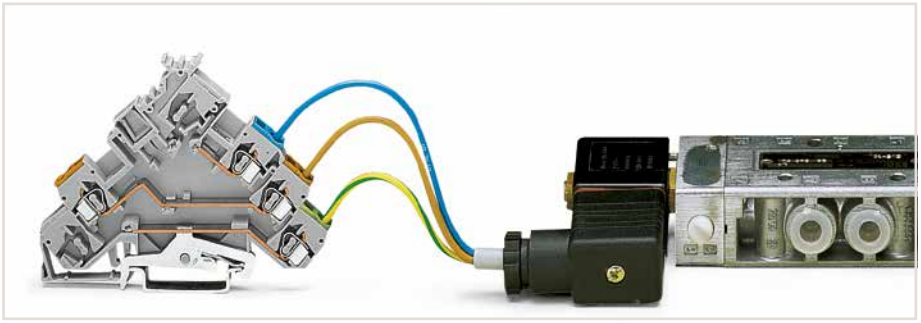

Actuator terminal block (ground connection) paired with a magnetic valve

* 12 AWG: THHN, THWN

❶ 400 V/250 V = rated voltage
6 kV/4 kV = rated surge voltage
3 = pollution degree
(see Section 14)

❷ Electrical ratings are given by the fuse plug or empty component plug housing.

❸ For empty component plug housings, see Full Line Catalog, Interface Modules, Volume 4
x =12 mm/0.472 inch
For fuse plugs (281-511), see page 286
x = 15.5 mm/0.61 inch
y = 10 mm/0.394 inch

❹ See application notes for:
Insulation stop, page 331



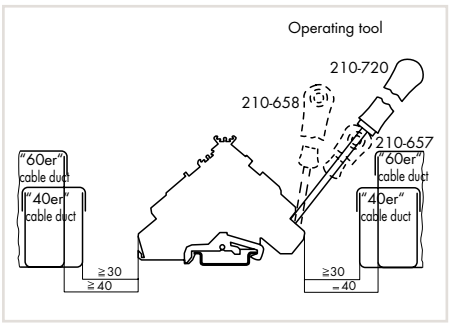

Min. mounting distance – terminal blocks to cable duct

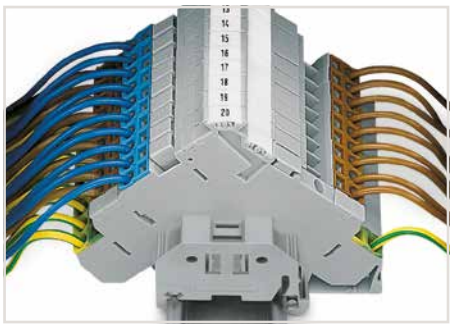

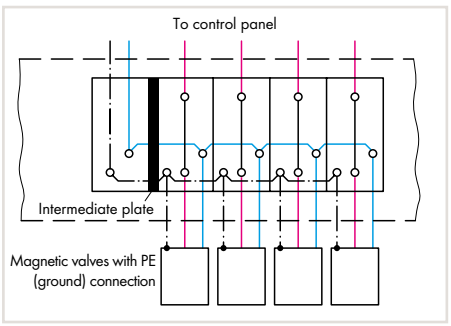

Power supply from control panel side

280 Series Accessories

Appropriate marking system:
WMB (see Section 13)

End and intermediate plate, 1 mm thick, for quadruple-deck terminal blocks			
	orange	**280-323**	100 (4x25)
	gray	**280-320**	100 (4x25)
Insulation stop, 5 pcs/strip, 0.08 ... 0.2 mm² "s" (0.14 mm² "f-st") ❹			
	white	**280-470**	200 (8x25)
Insulation stop, 5 pcs/strip, 0.25 ... 0.5 mm² ❹			
	light gray	**280-471**	200 (8x25)
Insulation stop, 5 pcs/strip, 0.75 ... 1 mm² ❹			
	dark gray	**280-472**	200 (8x25)
Adjacent jumper, insulated, $I_N = I_N$ terminal block			
	gray	**280-402**	200 (8x25)
Screwless end stop, for DIN-35 rail, 6 mm wide			
	gray	**249-116**	100 (4x25)
Screwless end stop, for DIN-35 rail, 10 mm wide			
	gray	**249-117**	50 (2x25)

CAGE CLAMP®

Actuator LED Terminal Blocks and Actuator LED Terminal Blocks with Ground Connection

2.5 mm², 280 Series

0.08 … 2.5 mm²	28 … 12 AWG*
24 VDC ❶	24 V, 15 A
20 A	300 V, 15 A
Terminal block width 5 mm / 0.197 inch	
8 … 9 mm / 0.31 … 0.35 inch	

0.08 … 2.5 mm²	28 … 12 AWG*
24 VDC ❶	24 V, 15 A
20 A	300 V, 15 A
Terminal block width 5 mm / 0.197 inch	
8 … 9 mm / 0.31 … 0.35 inch	

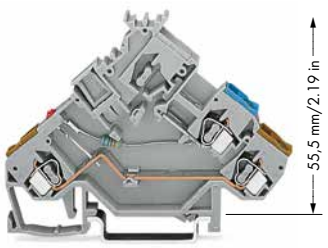

280-562/281-434 280-562/281-420

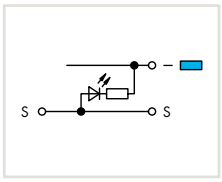

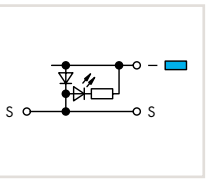

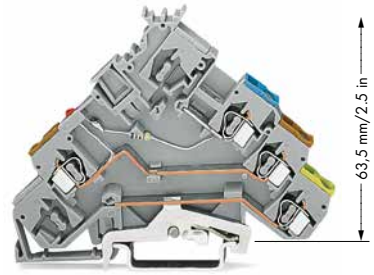

280-572/281-434 280-572/281-420

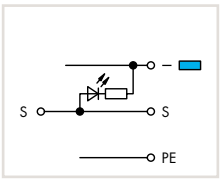

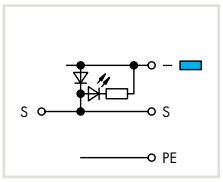

* 12 AWG: THHN, THWN

❶ Other voltages are available upon request.

❸ See application notes for: Insulation stop, page 331

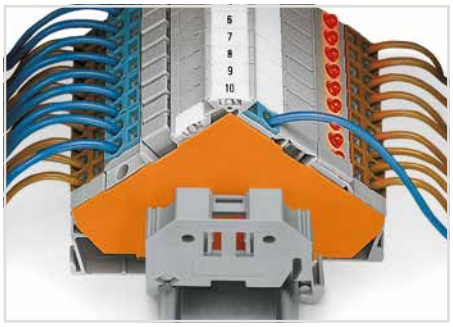

Item No.	Pack. Unit
Actuator LED terminal block, red LED, power consumption: 4.8 mA	
280-562/281-434	50
Actuator LED terminal block, with 1N4007 recovery diode, red LED, power consumption: 4.8 mA	
280-562/281-420	50

Item No.	Pack. Unit
Actuator LED terminal block, with ground connection, red LED, power consumption: 4.8 mA	
280-572/281-434	50
Actuator LED terminal block, with ground connection, with 1N4007 recovery diode, red LED, power consumption: 4.8 mA	
280-572/281-420	50

Item-Specific Accessories

End and intermediate plate, 1 mm thick, for triple-deck terminal blocks



orange	**280-321**	100 (4x25)
gray	**280-319**	100 (4x25)

Item-Specific Accessories

End and intermediate plate, 1 mm thick, for quadruple-deck terminal blocks



orange	**280-323**	100 (4x25)
gray	**280-320**	100 (4x25)

280 Series Accessories

Appropriate marking system: WMB (see Section 13)

Insulation stop, 5 pcs/strip, 0.08 … 0.2 mm² "s" (0.14 mm² "f-st") ❷



white	**280-470**	200 (8x25)

Adjacent jumper, insulated, $I_N = I_N$ terminal block



gray	**280-402**	200 (8x25)

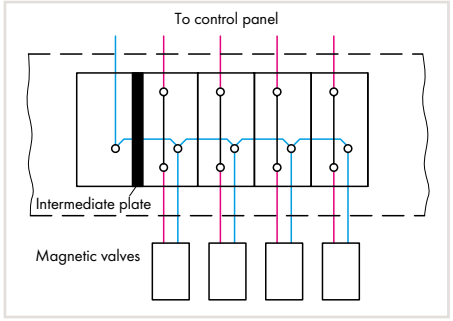

Power supply from control panel side

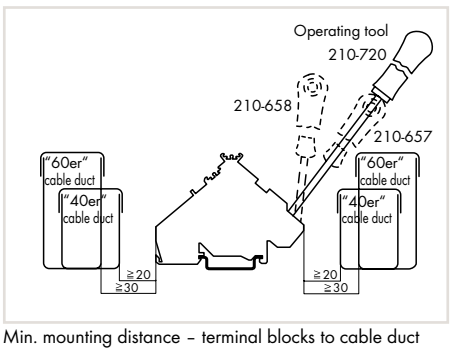

Min. mounting distance – terminal blocks to cable duct

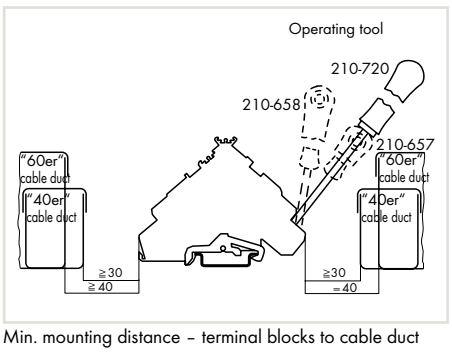

Min. mounting distance – terminal blocks to cable duct

Overview of certification organizations, see page 654

CAGE CLAMP®

Actuator Terminal Blocks for Actuators with Shield Connection and Actuators with Shield Conductor Through Contact (e.g., for Thermocouples)

2.5 mm², 280 Series

0.08 … 2.5 mm²	28 … 12 AWG*
400 V/6 kV/3 ❶	300 V, 15 A
I_N 20 A	300 V, 15 A
Terminal block width 5 mm / 0.197 inch	
8 … 9 mm / 0.31 … 0.35 inch	

0.08 … 2.5 mm²	28 … 12 AWG*
400 V/6 kV/3 ❶	300 V, 15 A
I_N 20 A	
Terminal block width 5 mm / 0.197 inch	
8 … 9 mm / 0.31 … 0.35 inch	

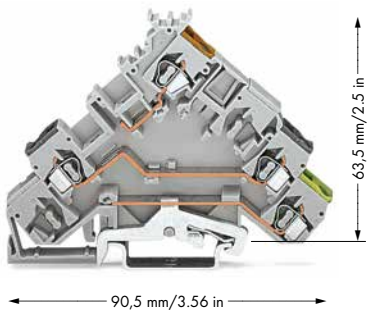

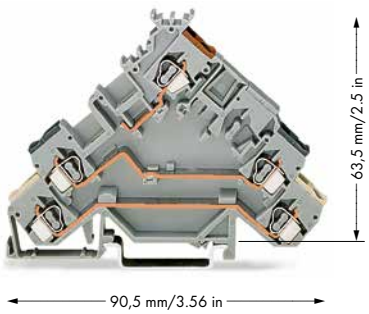

* 12 AWG: THHN, THWN

❶ 400 V = rated voltage
6 kV = rated surge voltage
3 = pollution degree
(see Section 14)

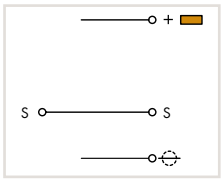

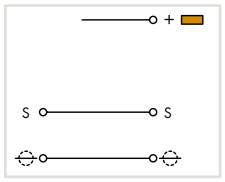



Green-yellow clamping unit = shield connection

Item No.	Pack. Unit
Actuator terminal block, with shield connection	
280-585	50
Item-specific accessories, see page 301	

Item No.	Pack. Unit
Actuator terminal block, with shield conductor through contact	
280-583	50
Item-specific accessories, see page 301	

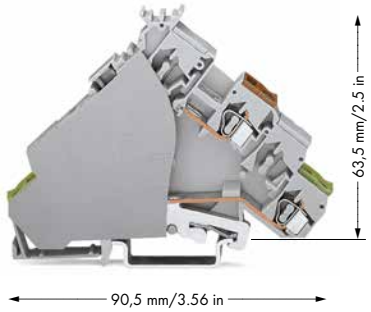

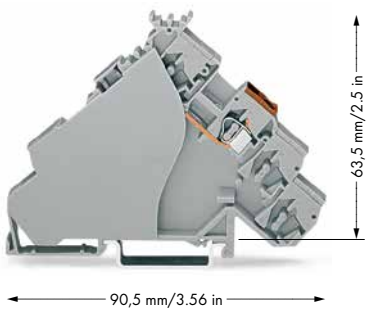

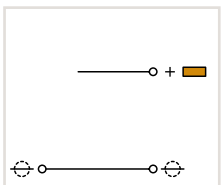

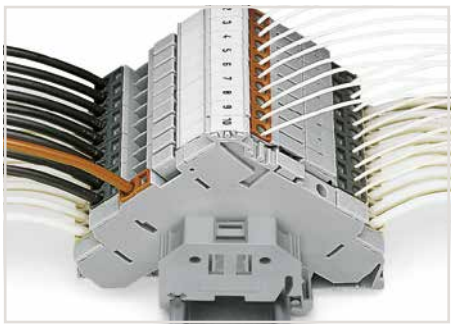

White clamping unit = shield conductor through contact

Item No.	Pack. Unit
Actuator supply terminal block, with shield connection, power supply from control panel side, with end plate	
280-586	50
Item-specific accessories, see page 301	

Item No.	Pack. Unit
Actuator supply terminal block, power supply from control panel side, with end plate, for actuators with shield conductor through contact	
280-515	20
Item-specific accessories, see page 301	

Diode Terminal Blocks and LED Terminal Blocks

1.5 mm², 279 Series

0.08 … 1.5 mm² | 28 … 16 AWG U_N 250 V, U_{RM} 1000 V 1N4007 - 0.5 A continuous current Terminal block width 4 mm / 0.157 inch 8 … 9 mm / 0.31 … 0.35 inch	0.08 … 1.5 mm² | 28 … 16 AWG U_N 250 V, U_{RM} 1000 V 1N4007 - 0.5 A continuous current Terminal block width 4 mm / 0.157 inch 8 … 9 mm / 0.31 … 0.35 inch	0.08 … 1.5 mm² | 28 … 16 AWG 24 VDC I_F 0.025 A max. Terminal block width 4 mm / 0.157 inch 8 … 9 mm / 0.31 … 0.35 inch

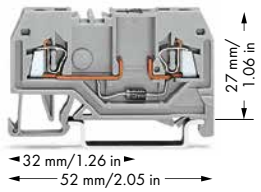

279-915/281-410 279-915/281-411

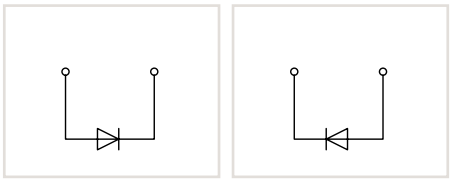

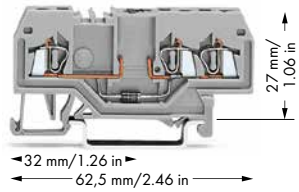

279-673/281-410 279-673/281-411

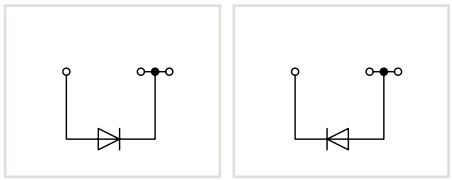

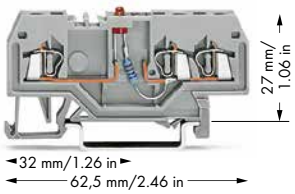

279-674/281-434 279-674/281-413

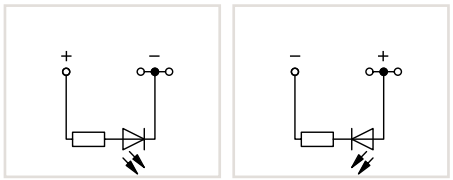

Item No.		Pack. Unit
2-conductor diode terminal block, with 1N4007 diode		
gray	**279-915/281-410**	100
gray	**279-915/281-411**	100

Item No.		Pack. Unit
3-conductor diode terminal block, with 1N4007 diode		
gray	**279-673/281-410**	100
gray	**279-673/281-411**	100

Item No.		Pack. Unit
3-conductor LED terminal block, with red LED		
gray	**279-674/281-434**	100
gray	**279-674/281-413**	100

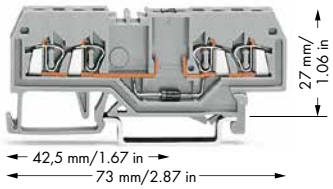

279-815/281-410 279-815/281-411

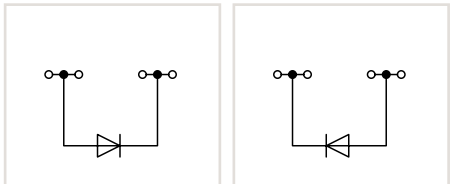

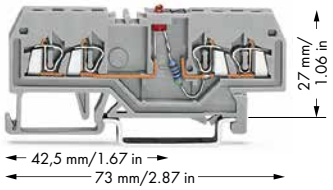

279-809/281-434 279-809/281-413

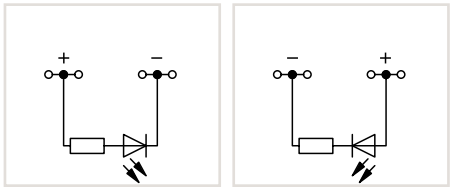

	Item No.	Pack. Unit
Through terminal blocks with same profile, see page 218	4-conductor diode terminal block, with 1N4007 diode	
gray	**279-815/281-410**	100
gray	**279-815/281-411**	100

Item No.		Pack. Unit
4-conductor LED terminal block, with red LED		
gray	**279-809/281-434**	100
gray	**279-809/281-413**	100

Diode Terminal Blocks and LED Terminal Blocks

Circuit Configuration Examples

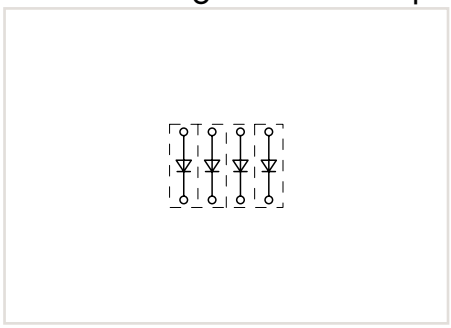

Open diode gates can be created using the following terminal blocks:
279-915/281-410 or 279-915/281-411

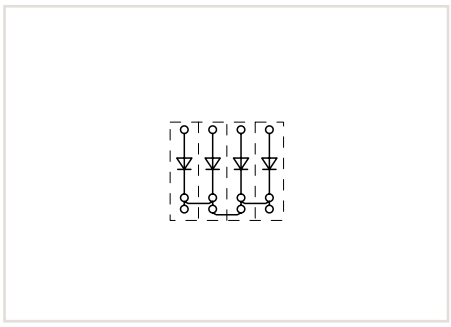

Polarized diode gates with a common cathode can be created using the following terminal blocks:
279-673/281-410 or 279-673/281-411

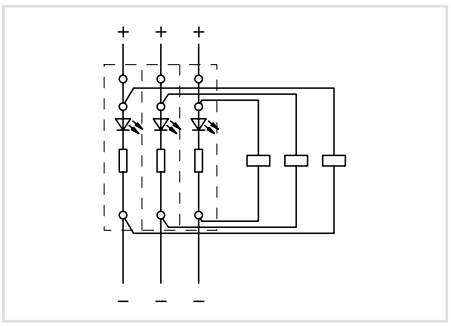

Circuit-related voltage indications can be created using the following terminal blocks:
279-674/281-434 or 279-674/281-413

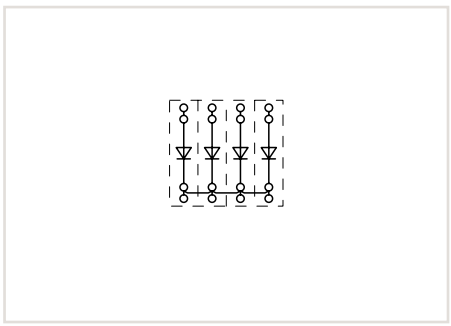

Polarized diode gates with a common cathode can be created using the following terminal blocks:
279-815/281-410 or 279-815/281-411

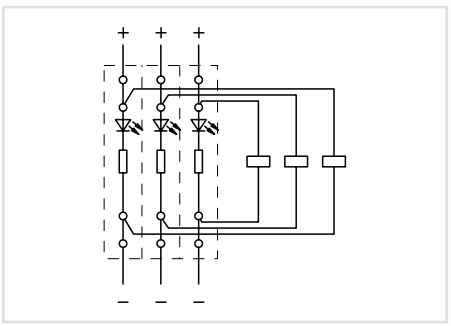

Circuit-related voltage indications can be created using the following terminal blocks:
279-809/281-434 or 279-809/281-413

279 Series Accessories

Appropriate marking system:
WMB (see Section 13)

Insulation stop, 5 pcs/strip, 0.08 ... 0.2 mm² "s" (0.14 mm² "f-st")			
	white	**279-470**	200 (8x25)
Insulation stop, 5 pcs/strip, 0.25 mm²			
	dark gray	**279-471**	200 (8x25)
Comb-style jumper bar, insulated, I_N = I_N terminal block			
	2-way	**279-482**	200 (8x25)
	3-way	**279-483**	200 (8x25)
Comb-style jumper bar, insulated, I_N = I_N terminal block			
	10-way	**279-490**	50 (2x25)
Alternate comb-style jumper bar, insulated, I_N = I_N terminal block			
	2-way	**279-492**	200 (8x25)
Operating tool, of insulating material			
	2-way	**279-432**	1
	3-way	**279-433**	1
Operating tool, of insulating material			
	10-way	**279-440**	1
			

Diode Terminal Blocks and LED Terminal Blocks

2.5 mm², 280 Series

0.08 ... 2.5 mm² | 28 ... 14 AWG U_N 250 V, U_{RM} 1000 V 1N4007 - 0.5 A continuous current Terminal block width 5 mm / 0.197 inch 8 ... 9 mm / 0.31 ... 0.35 inch	0.08 ... 2.5 mm² | 28 ... 14 AWG U_N 250 V, U_{RM} 1000 V 1N4007 - 0.5 A continuous current Terminal block width 5 mm / 0.197 inch 8 ... 9 mm / 0.31 ... 0.35 inch	0.08 ... 2.5 mm² | 28 ... 14 AWG 24 VDC I_F 0.025 A max. Terminal block width 5 mm / 0.197 inch 8 ... 9 mm / 0.31 ... 0.35 inch

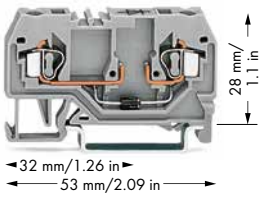

280-915/281-410 280-915/281-411

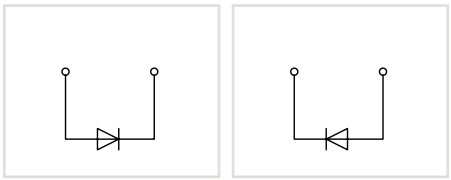

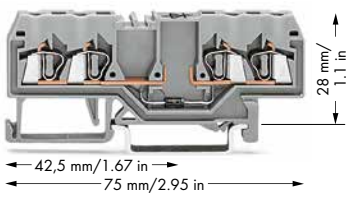

280-815/281-410 280-815/281-411

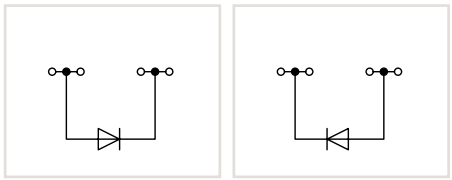

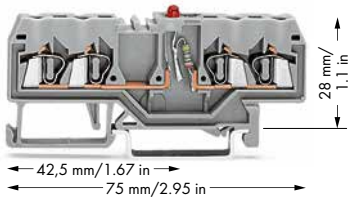

280-809/281-434 280-809/281-413

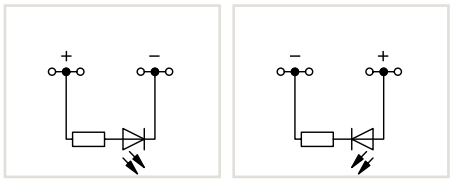

	Item No.	Pack. Unit
2-conductor diode terminal block, with 1N4007 diode		
gray	**280-915/281-410**	100
gray	**280-915/281-411**	100

	Item No.	Pack. Unit
4-conductor diode terminal block, with 1N4007 diode		
gray	**280-815/281-410**	100
gray	**280-815/281-411**	100

	Item No.	Pack. Unit
4-conductor LED terminal block, with red LED		
gray	**280-809/281-434**	100
gray	**280-809/281-413**	100

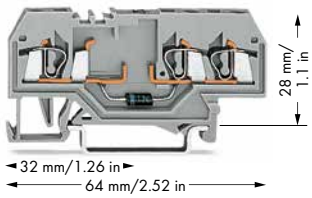

280-673/281-410 280-673/281-411

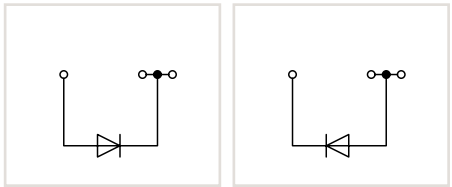

	Item No.	Pack. Unit
Through terminal blocks with same profile, see page 220	3-conductor diode terminal block, with 1N4007 diode	
gray	**280-673/281-410**	100
gray	**280-673/281-411**	100

Diode Terminal Blocks and LED Terminal Blocks

Circuit Configuration Examples

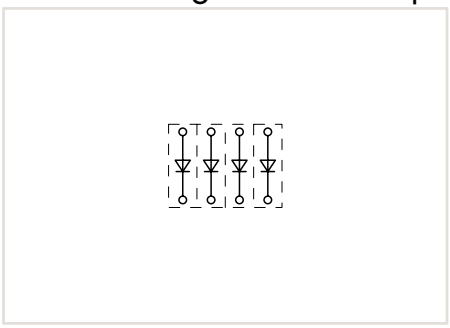

Open diode gates can be created using the following terminal blocks:
280-915/281-410 or 280-915/281-411

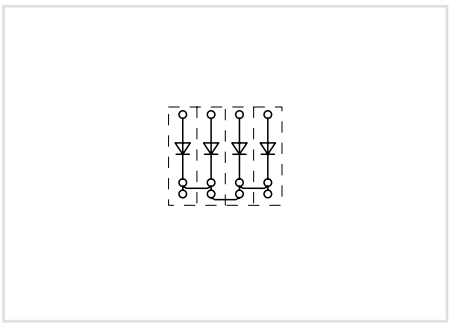

Polarized diode gates with a common cathode can be created using the following terminal blocks:
280-673/281-410 or 280-673/281-411

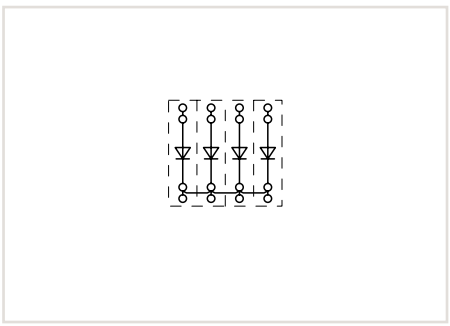

Polarized diode gates with a common cathode can be created using the following terminal blocks:
280-815/281-410 or 280-815/281-411

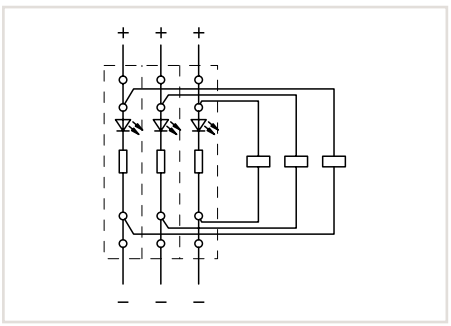

Circuit-related voltage indications can be created using the following terminal blocks:
280-809/281-434 or 280-809/281-413

5

280 Series Accessories

Appropriate marking system:
WMB (see Section 13)

Insulation stop, 5 pcs/strip, 0.08 ... 0.2 mm² "s" (0.14 mm² "f-st")			
	white	**280-470**	200 (8x25)
Insulation stop, 5 pcs/strip, 0.25 ... 0.5 mm²			
	light gray	**280-471**	200 (8x25)
Insulation stop, 5 pcs/strip, 0.75 ... 1 mm²			
	dark gray	**280-472**	200 (8x25)
Comb-style jumper bar, insulated, I_N = I_N terminal block			
	2-way	**280-482**	200 (8x25)
	3-way	**280-483**	200 (8x25)
Comb-style jumper bar, insulated, I_N = I_N terminal block			
	10-way	**280-490**	50 (2x25)
Alternate comb-style jumper bar, insulated, I_N = I_N terminal block			
	2-way	**280-492**	200 (8x25)
Operating tool, of insulating material			
	2-way	**280-432**	1
	3-way	**280-433**	1
Operating tool, of insulating material			
	10-way	**280-440**	1
Wire commoning chain, insulated, 50 connections, I_N 8 A			
	black	**210-103**	1
Wire commoning chain, insulated, 50 connections, I_N 8 A			
	blue	**210-123**	1

Diode Terminal Blocks

4 mm², 281 Series

0.08 … 4 mm² | 28 … 12 AWG **U_N 250 V, U_{RM} 1000 V** **Terminal block width 6 mm / 0.236 inch** **9 … 10 mm / 0.35 … 0.39 inch**	**0.08 … 4 mm² | 28 … 12 AWG** **U_N 250 V, U_{RM} 1000 V** **Terminal block width 6 mm / 0.236 inch** **9 … 10 mm / 0.35 … 0.39 inch**	**0.08 … 4 mm² | 28 … 12 AWG** **U_N 250 V, U_{RM} 1000 V** **Terminal block width 6 mm / 0.236 inch** **9 … 10 mm / 0.35 … 0.39 inch**



281-915/281-410 281-915/281-411

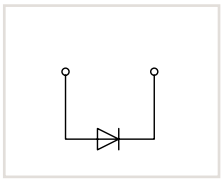

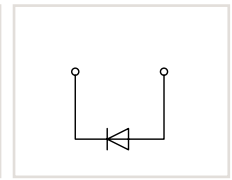

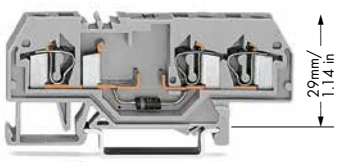

281-673/281-410 281-673/281-411

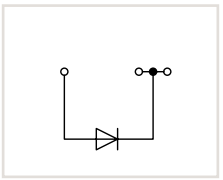

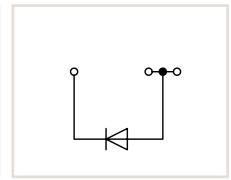

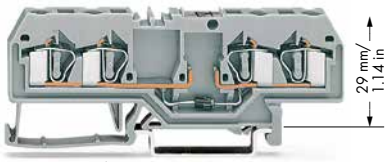

281-665/281-410 281-665/281-411

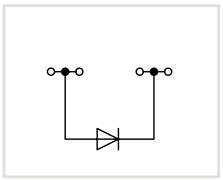

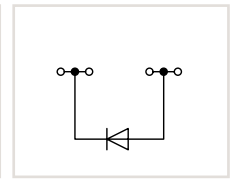

Item No.		Pack. Unit
2-conductor diode terminal block, with 1N4007 diode, 0.5 A continuous current		
gray	**281-915/281-410**	50
gray	**281-915/281-411**	50
2-conductor diode terminal block, with 1N5408 diode, 1.5 A continuous current		
gray	**281-915/281-400**	50
gray	**281-915/281-401**	50
Other terminal blocks with the same profile:		
Through	**281-901**	Page 226

Item No.		Pack. Unit
3-conductor diode terminal block, with 1N4007 diode, 0.5 A continuous current		
gray	**281-673/281-410**	50
gray	**281-673/281-411**	50
3-conductor diode terminal block, with 1N5408 diode, 1.5 A continuous current		
gray	**281-673/281-400**	50
gray	**281-673/281-401**	50
Other terminal blocks with the same profile:		
Through	**281-681**	Page 226

Item No.		Pack. Unit
4-conductor diode terminal block, with 1N4007 diode, 0.5 A continuous current		
gray	**281-665/281-410**	50
gray	**281-665/281-411**	50
4-conductor diode terminal block, with 1N5408 diode, 1.5 A continuous current		
gray	**281-665/281-400**	50
gray	**281-665/281-401**	50
Other terminal blocks with the same profile:		
Through	**281-652**	Page 226

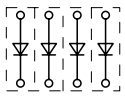

Open diode gates can be created using the following terminal blocks:
281-915/281-410 or 281-915/281-411
281-915/281-400 or 281-915/281-401

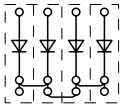

Polarized diode gates with a common cathode can be created using the following terminal blocks:
281-673/281-410 or 281-673/281-411
281-673/281-400 or 281-673/281-401

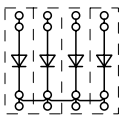

Polarized diode gates with a common cathode can be created using the following terminal blocks:
281-665/281-410 or 281-665/281-411
281-665/281-400 or 281-665/281-401

Accessories for 280 Series

281 Series Accessories

Appropriate marking system:
WMB (see Section 13)

Insulation stop, 5 pcs/strip, 0.08 ... 0.2 mm² "s" (0.14 mm² "f-st")			
	white	**281-470**	200 (8x25)
Insulation stop, 5 pcs/strip, 0.25 ... 0.5 mm²			
	light gray	**281-471**	200 (8x25)
Insulation stop, 5 pcs/strip, 0.25 ... 1.5 mm²			
	dark gray	**281-472**	200 (8x25)
Comb-style jumper bar, insulated, I_N = I_N terminal block			
	2-way	**281-482**	100 (4x25)
	3-way	**281-483**	100 (4x25)
	5-way	**281-485**	100 (4x25)
	10-way	**281-490**	50 (2x25)
Alternate comb-style jumper bar, insulated, I_N = I_N terminal block			
	2-way	**281-492**	100 (4x25)
Operating tool, of insulating material			
	2-way	**280-432**	1
	3-way	**280-433**	1
	5-way	**281-440**	1
Wire commoning chain, insulated, 50 connections, I_N 8 A			
	black	**210-103**	1
Wire commoning chain, insulated, 50 connections, I_N 8 A			
	blue	**210-123**	1

Double-Deck Diode Terminal Blocks and LED Terminal Blocks

2.5 mm², 280 Series

0.08 ... 2.5 mm² | 28 ... 14 AWG U_N 250 V, U_{RM} 1000 V 1N4007 - 0.5 A continuous current Terminal block width 5 mm / 0.197 inch 8 ... 9 mm / 0.31 ... 0.35 inch	0.08 ... 2.5 mm² | 28 ... 14 AWG U_N 250 V, U_{RM} 1000 V 1N4007 - 0.5 A continuous current Terminal block width 5 mm / 0.197 inch 8 ... 9 mm / 0.31 ... 0.35 inch	0.08 ... 2.5 mm² | 28 ... 14 AWG 24 VDC I_F 0.025 A max. Terminal block width 5 mm / 0.197 inch 8 ... 9 mm / 0.31 ... 0.35 inch

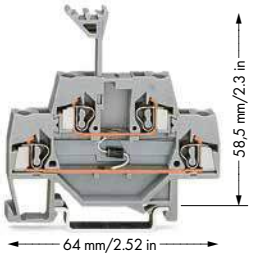

280-940/281-410 280-940/281-411

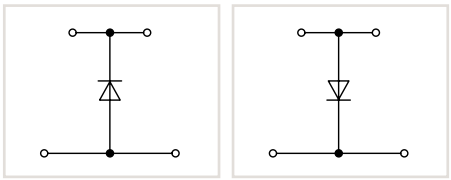

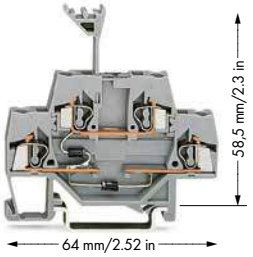

280-941/281-492 280-941/281-491

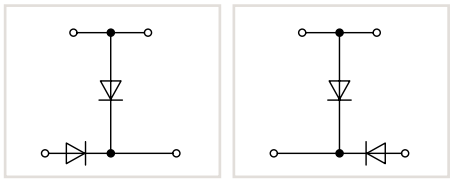

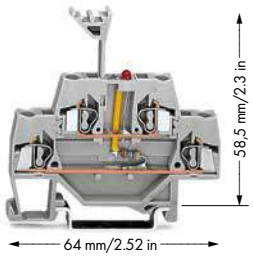

280-943/281-434 280-943/281-413

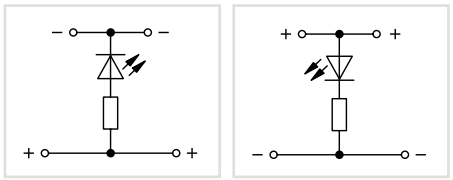

Item No.		Pack. Unit
Double-deck diode terminal block, with 1N4007 diode		
gray	**280-940/281-410**	50
gray	**280-940/281-411**	50

Item No.		Pack. Unit
Double-deck diode terminal block, with two 1N4007 diodes		
gray	**280-941/281-492**	50
gray	**280-941/281-491**	50

Item No.		Pack. Unit
Double-deck LED terminal block, with red LED		
gray	**280-943/281-434**	50
gray	**280-943/281-413**	50

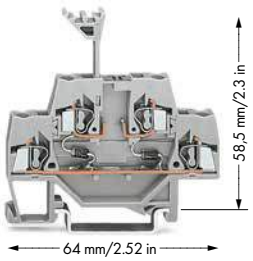

280-942/281-487 280-942/281-488

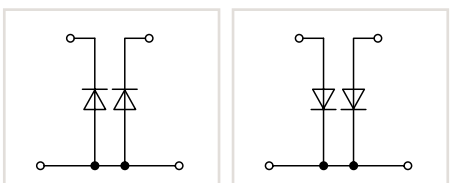

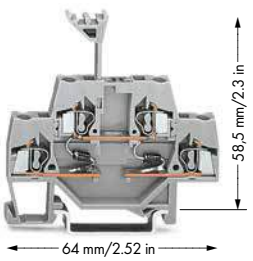

280-941/281-489 280-941/281-490

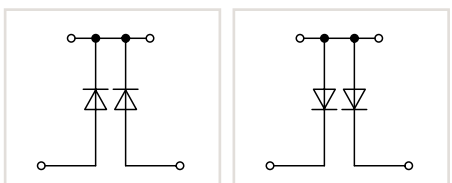

Item No.		Pack. Unit
Double-deck diode terminal block, with two 1N4007 diodes		
gray	**280-942/281-487**	50
gray	**280-942/281-488**	50

Item No.		Pack. Unit
Double-deck diode terminal block, with two 1N4007 diodes		
gray	**280-941/281-489**	50
gray	**280-941/281-490**	50

Through terminal blocks with same profile, see page 240

Double-Deck Diode Terminal Blocks and LED Terminal Blocks

Circuit Configuration Examples

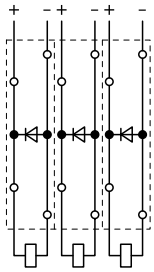

Recovery diodes can be created using the following terminal blocks:
280-940/281-410 or 280-940/281-411

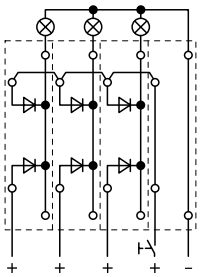

Lamp test circuits can be created using the following terminal blocks:
280-942/281-487 or 280-942/281-488

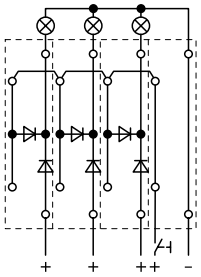

Lamp test circuits can be created using the following terminal blocks:
280-941/281-492 or 280-941/281-491

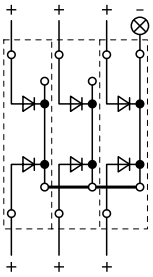

Collective fault signals can be created using the following terminal blocks:
280-941/281-489 or 280-941/281-490

Double-deck diode terminal blocks were specifically developed for custom diode circuits, such as lamp test and collective fault signal circuits.
Using LED terminal blocks, monitoring units can be designed, e.g., for control and operating circuits.
These terminal blocks provide high-density wiring in a width of just 5 mm.

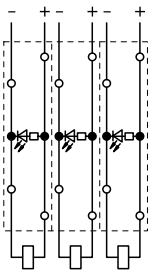

Circuit-related voltage indications can be created using the following terminal blocks:
280-943/281-434 or 280-943/281-413

5

280 Series Accessories

Appropriate marking systems (see Section 13)

End and intermediate plate, 2.5 mm thick			
	orange	**280-341**	100 (4x25)
	gray	**280-340**	100 (4x25)
Insulation stop, 5 pcs/strip, 0.08 ... 0.2 mm² "s" (0.14 mm² "f-st")			
	white	**280-470**	200 (8x25)
Insulation stop, 5 pcs/strip, 0.25 ... 0.5 mm²			
	light gray	**280-471**	200 (8x25)
Insulation stop, 5 pcs/strip, 0.75 ... 1 mm²			
	dark gray	**280-472**	200 (8x25)
Comb-style jumper bar, insulated, I_N = I_N terminal block			
	2-way	**280-482**	200 (8x25)
	3-way	**280-483**	200 (8x25)
Comb-style jumper bar, insulated, I_N = I_N terminal block			
	10-way	**280-490**	50 (2x25)
Alternate comb-style jumper bar, insulated, I_N = I_N terminal block			
	2-way	**280-492**	200 (8x25)
Operating tool, of insulating material			
	2-way	**280-432**	1
	3-way	**280-433**	1
Operating tool, of insulating material			
	10-way	**280-440**	1
Wire commoning chain, insulated, 50 connections, I_N 8 A			
	black	**210-103**	1
Wire commoning chain, insulated, 50 connections, I_N 8 A			
	blue	**210-123**	1

Double-Deck Diode Terminal Blocks and LED Terminal Blocks

4 mm², 281 Series

0.08 ... 4 mm² | 28 ... 12 AWG U_N 250 V, U_{RM} 1000 V 1N4007 - 0.5 A continuous current Terminal block width 6 mm / 0.236 inch 9 ... 10 mm / 0.35 ... 0.39 inch	0.08 ... 4 mm² | 28 ... 12 AWG U_N 250 V, U_{RM} 1000 V 1N4007 - 0.5 A continuous current Terminal block width 6 mm / 0.236 inch 9 ... 10 mm / 0.35 ... 0.39 inch	0.08 ... 4 mm² | 28 ... 12 AWG 24 VDC I_F 0.025 A max. Terminal block width 6 mm / 0.236 inch 9 ... 10 mm / 0.35 ... 0.39 inch

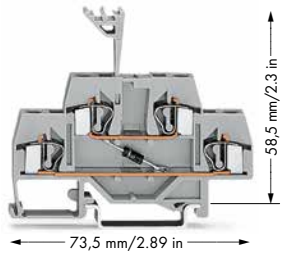

281-633/281-410 281-633/281-411

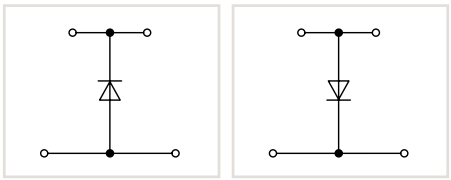

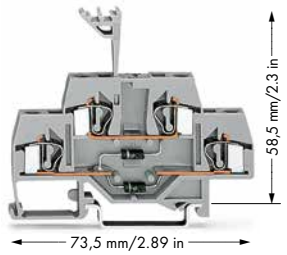

281-635/281-492 281-635/281-491

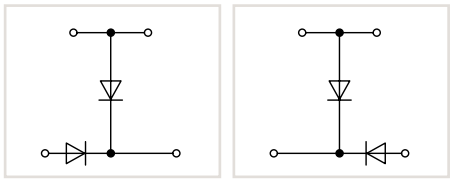

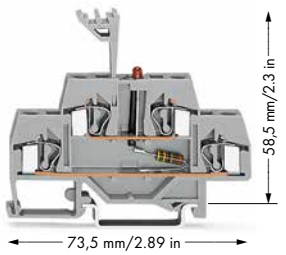

281-634/281-434 281-634/281-413

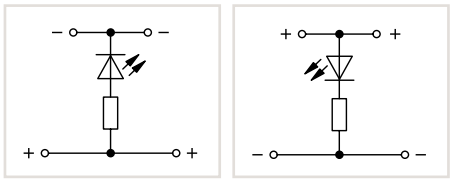

Item No.		Pack. Unit
Double-deck diode terminal block, with 1N4007 diode		
gray	**281-633/281-410**	50
gray	**281-633/281-411**	50

Item No.		Pack. Unit
Double-deck diode terminal block, with two 1N4007 diodes		
gray	**281-635/281-492**	50
gray	**281-635/281-491**	50

Item No.		Pack. Unit
Double-deck LED terminal block, with red LED		
gray	**281-634/281-434**	50
gray	**281-634/281-413**	50

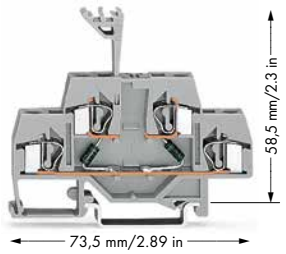

281-636/281-487 281-636/281-488

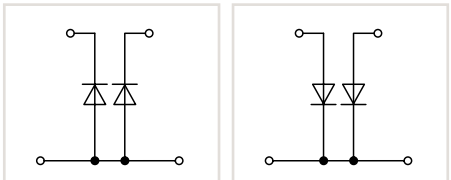

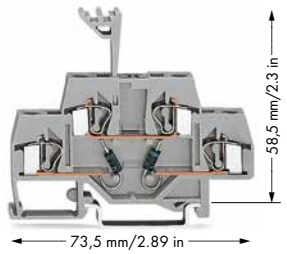

281-635/281-489 281-635/281-490

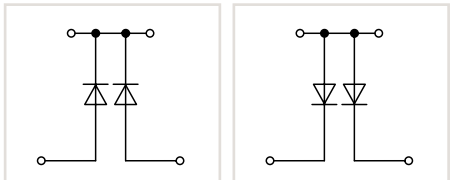

Item No.		Pack. Unit
Double-deck diode terminal block, with two 1N4007 diodes		
gray	**281-636/281-487**	50
gray	**281-636/281-488**	50

Item No.		Pack. Unit
Double-deck diode terminal block, with two 1N4007 diodes		
gray	**281-635/281-489**	50
gray	**281-635/281-490**	50

Through terminal blocks with same profile, see page 244

Double-Deck Diode Terminal Blocks and LED Terminal Blocks

Circuit Configuration Examples

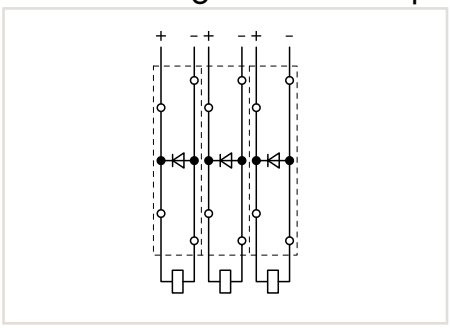

Recovery diodes can be created using the following terminal blocks:
281-633/281-410 or 281-633/281-411

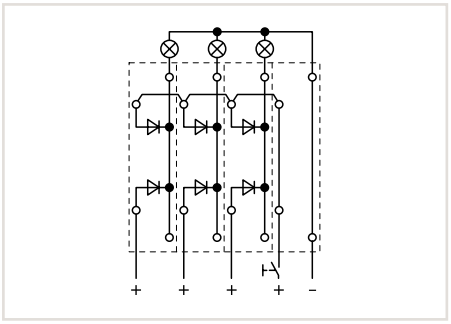

Lamp test circuits can be created using the following terminal blocks:
281-636/281-487 or 281-636/281-488

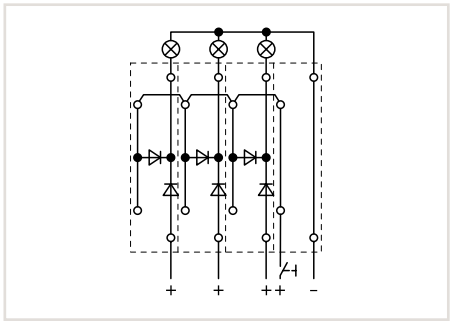

Lamp test circuits can be created using the following terminal blocks:
281-635/281-492 or 281-635/281-491

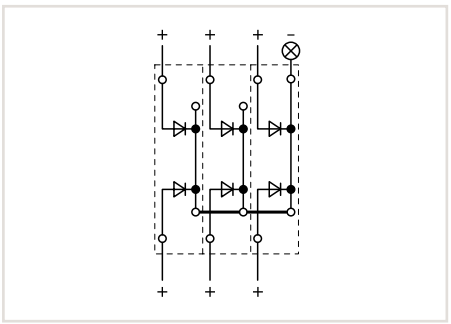

Collective fault signals can be created using the following terminal blocks:
281-635/281-489 or 281-635/281-490

Double-deck diode terminal blocks were specifically developed for custom diode circuits, such as lamp test and collective fault signal circuits.
Using LED terminal blocks, monitoring units can be designed, e.g., for control and operating circuits.
These terminal blocks provide high-density wiring in a width of just 6 mm.

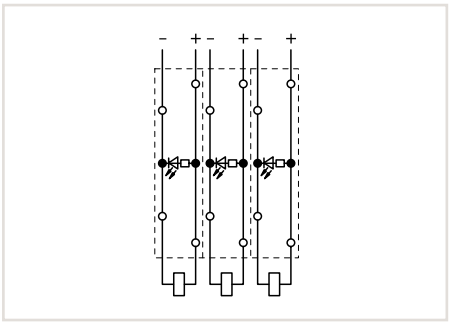

Circuit-related voltage indications can be created using the following terminal blocks:
280-634/281-434 or 280-634/281-413

281 Series Accessories

Appropriate marking system:
WMB (see Section 13)

End and intermediate plate, 2.5 mm thick			
	orange	**281-341**	100 (4x25)
	gray	**281-340**	100 (4x25)
Insulation stop, 5 pcs/strip, 0.08 ... 0.2 mm² "s" (0.14 mm² "f-st")			
	white	**281-470**	200 (8x25)
Insulation stop, 5 pcs/strip, 0.25 ... 0.5 mm²			
	light gray	**281-471**	200 (8x25)
Insulation stop, 5 pcs/strip, 0.25 ... 1.5 mm²			
	dark gray	**281-472**	200 (8x25)
Comb-style jumper bar, insulated, $I_N = I_N$ terminal block			
	2-way	**281-482**	100 (4x25)
	3-way	**281-483**	100 (4x25)
	5-way	**281-485**	100 (4x25)
	10-way	**281-490**	50 (2x25)
Alternate comb-style jumper bar, insulated, $I_N = I_N$ terminal block			
	2-way	**281-492**	100 (4x25)
Operating tool, of insulating material			
	2-way	**280-432**	1
	3-way	**280-433**	1
	5-way	**281-440**	1
Wire commoning chain, insulated, 50 connections, I_N 8 A			
	black	**210-103**	1
Wire commoning chain, insulated, 50 connections, I_N 8 A			
	blue	**210-123**	1

Pluggable Diode Modules on Carrier Terminal Blocks, 2.5 mm²

280 Series

Diode module
with 1N4007 diode
U_N 250 V, U_{RM} 1000 V
I_N 0.5 A
Plug width 5 mm / 0.197 inch



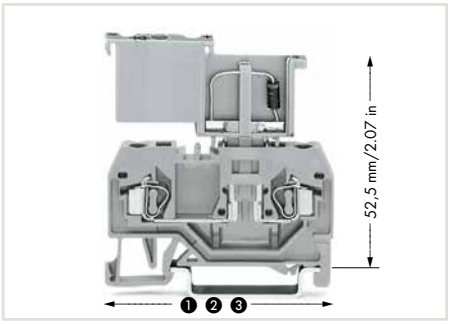

These diode modules are ideal for custom diode circuits (e.g., lamp test and collective fault signal circuits) and offer the following advantages:
- Separation into functional and wiring levels
- Polarized switching direction
- Quick and easy module replacement
- Terminal blocks/modules provide high-density wiring in a width of just 5 mm

* 12 AWG: THHN, THWN

1 Length of 280-916: 53 mm / 2.09 inch
2-conductor carrier terminal block, front-entry

2 Length of 280-610: 64 mm / 2.52 inch
3-conductor carrier terminal block, front-entry

3 Length of 280-816: 75 mm / 2.95 inch
4-conductor carrier terminal block, front-entry

4 See application notes for:
Insulation stop, page 331
Comb-style jumper bar, page 332
Operating tool, page 332

5

280-801/281-411 280-801/281-420

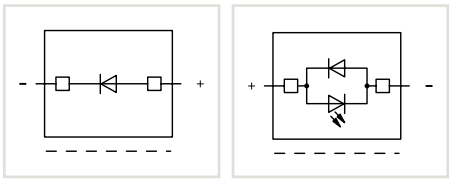

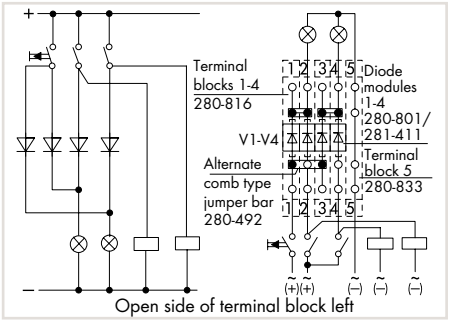

Lamp test circuit with blocking diodes

For terminal blocks with side marking, see www.wagocatalog.com

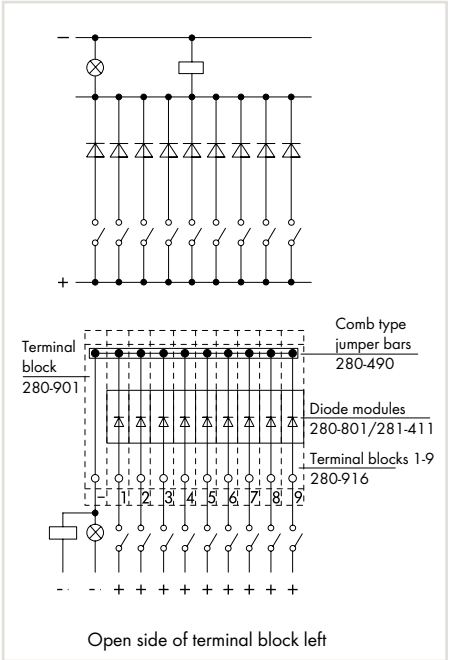

Diode gate for collective fault indication

	Item No.	Pack. Unit
Diode module, with 1N4007 diode, 5 mm wide		
gray	**280-801/281-411**	100
Diode module, with 1N4007 recovery diode, red LED, 5 mm wide, gray		
24 VDC	**280-801/281-420**	100
48 VDC	**280-801/281-421**	100

Carrier Term. Blocks and Accessories

Appropriate marking system:
WMB (see Section 13)

2-conductor carrier terminal block,			
1	0.08 ... 2.5 mm² / 28 ... 12 AWG*		
	Terminal block width 5 mm / 0.197 inch		
	gray	**280-916**	100
End and intermediate plate, 2.5 mm thick			
	orange	**280-309**	100 (4x25)
	gray	**280-308**	100 (4x25)
3-conductor carrier terminal block,			
2	0.08 ... 2.5 mm² / 28 ... 12 AWG*		
	Terminal block width 5 mm / 0.197 inch		
	gray	**280-610**	100
End and intermediate plate, 2.5 mm thick			
	orange	**280-326**	100 (4x25)
	gray	**280-324**	100 (4x25)
4-conductor carrier terminal block,			
3	0.08 ... 2.5 mm² / 28 ... 12 AWG*		
	Terminal block width 5 mm / 0.197 inch		
	gray	**280-816**	100
End and intermediate plate, 2.5 mm thick			
	orange	**280-315**	100 (4x25)
	gray	**280-314**	100 (4x25)

Accessories

Insulation stop, 5 pcs/strip, 0.08 ... 0.2 mm² "s"			
4	(0.14 mm² "f-st")		
	white	**280-470**	200 (8x25)
Insulation stop, 5 pcs/strip, 0.25 ... 0.5 mm²			
4	light gray	**280-471**	200 (8x25)
Insulation stop, 5 pcs/strip, 0.75 ... 1 mm²			
4	dark gray	**280-472**	200 (8x25)
Comb-style jumper bar, insulated, I_N = I_N terminal block			
4	2-way	**280-482**	200 (8x25)
	3-way	**280-483**	200 (8x25)
Comb-style jumper bar, insulated, I_N = I_N terminal block			
	10-way	**280-490**	50 (2x25)
Alternate comb-style jumper bar, insulated, I_N = I_N terminal block			
	2-way	**280-492**	200 (8x25)
Operating tool, of insulating material			
	2-way	**280-432**	1
	3-way	**280-433**	1
Operating tool, of insulating material			
	10-way	**280-440**	1
Wire commoning chain, insulated, 50 connections, I_N 8 A			
	black	**210-103**	1
Wire commoning chain, insulated, 50 connections, I_N 8 A			
	blue	**210-123**	1

Pluggable Diode Modules on Through Terminal Blocks, 2.5 mm²

280 Series

Diode module
with 1N4007 diode
U_N 250 V, U_{RM} 1000 V
I_N 0.5 A
Plug width 10 mm / 0.394 inch



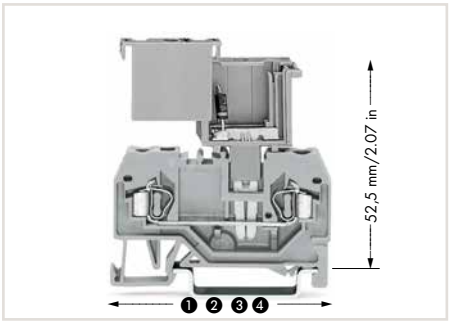

Similar to push-in type jumpers, these diode modules are simply pushed into the current bar's contact slots of two adjacent through terminal blocks, providing the following advantages:
- Compatibility with all 280 Series Through Terminal Blocks
- Easy retrofits for existing systems

* 12 AWG: THHN, THWN

❶ Length of 280-901: 53 mm / 2.09 inch
2-conductor through terminal block, front-entry

❷ Length of 280-681: 64 mm / 2.52 inch
3-conductor through terminal block, front-entry

❸ Length of 280-833: 75 mm / 2.95 inch
4-conductor through terminal block, front-entry

❹ Length of 280-101: 42.5 mm / 1.67 inch
2-conductor through terminal block, side-entry

❺ See application notes for:
Insulation stop, page 331
Comb-style jumper bar, page 332
Operating tool, page 332

280-803/281-411 280-803/281-420

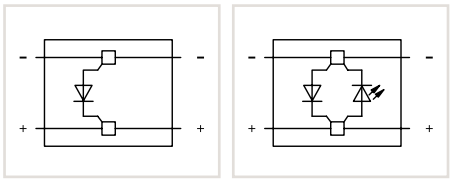

	Item No.	Pack. Unit
Diode module, with 1N4007 diode, 10 mm wide		
gray	**280-803/281-411**	50
Diode module, with 1N4007 recovery diode, 10 mm wide, gray		
24 VDC	**280-803/281-420**	50
48 VDC	**280-803/281-421**	50



Additional advantages:
- Separation into functional and wiring levels
- Fast replacement of other functional units

For terminal blocks with side marking, see www.wagocatalog.com

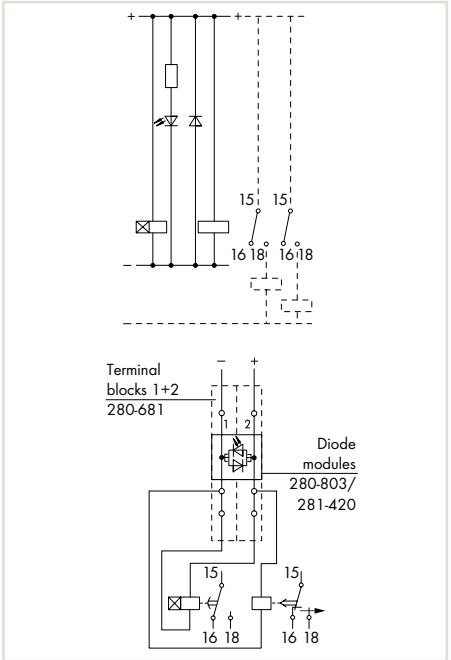

Free-wheeling diode and voltage check

Through Term. Blocks and Accessories

Appropriate marking system:
WMB (see Section 13)

2-conductor through terminal block,			
❶	0.08 ... 2.5 mm² / 28 ... 12 AWG*		
	Terminal block width 5 mm / 0.197 inch		
	gray	**280-901**	100
End and intermediate plate, 2.5 mm thick			
	orange	**280-309**	100 (4x25)
	gray	**280-308**	100 (4x25)
3-conductor through terminal block,			
❷	0.08 ... 2.5 mm² / 28 ... 12 AWG*		
	Terminal block width 5 mm / 0.197 inch		
	gray	**280-681**	100
End and intermediate plate, 2.5 mm thick			
	orange	**280-326**	100 (4x25)
	gray	**280-324**	100 (4x25)
4-conductor through terminal block,			
❸	0.08 ... 2.5 mm² / 28 ... 12 AWG*		
	Terminal block width 5 mm / 0.197 inch		
	gray	**280-833**	100
End and intermediate plate, 2.5 mm thick			
	orange	**280-315**	100 (4x25)
	gray	**280-314**	100 (4x25)

Accessories

2-conductor through terminal block,			
❹	0.08 ... 2.5 mm² / 28 ... 12 AWG*		
	Terminal block width 5 mm / 0.197 inch		
	gray	**280-101**	100
End and intermediate plate, 2.5 mm thick			
	orange	**280-302**	100 (4x25)
	gray	**280-301**	100 (4x25)
Insulation stop, 5 pcs/strip, 0.08 ... 0.2 mm² "s"			
❺	(0.14 mm² "f-st")		
	white	**280-470**	200 (8x25)
Insulation stop, 5 pcs/strip, 0.25 ... 0.5 mm²			
❺	light gray	**280-471**	200 (8x25)
Insulation stop, 5 pcs/strip, 0.75 ... 1 mm²			
❺	dark gray	**280-472**	200 (8x25)
Adjacent jumper, insulated, I_N = I_N terminal block			
	gray	**280-402**	200 (8x25)
Wire commoning chain, insulated, 50 connections, I_N 8 A			
	black	**210-103**	1
Wire commoning chain, insulated, 50 connections, I_N 8 A			
	blue	**210-123**	1

5

Pluggable LED and Neon Indicator Modules on Carrier Terminal Blocks, 2.5 mm²

280 Series

LED module
I_N 5.6 mA; I_F 25 mA
Neon indicator module
I_N 0.5 mA
Plug width 5 mm / 0.197 inch



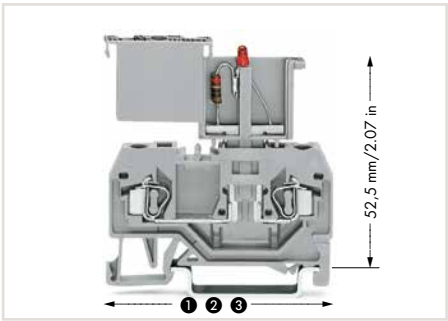

The monitoring of control and operating current circuits with LED modules on rail-mount terminal blocks provides several advantages:
- No additional cost for assembly and wiring
- Separation into functional and wiring levels
- Modules can be replaced quickly by other types of modules

1. Length of 280-916: 53 mm / 2.09 inch 2-conductor carrier terminal block, front-entry
2. Length of 280-610: 64 mm / 2.52 inch 3-conductor carrier terminal block, front-entry
3. Length of 280-816: 75 mm / 2.95 inch 4-conductor carrier terminal block, front-entry

5

	Item No.	Pack. Unit
LED module, with red LED, 5 mm wide, gray		
24 VDC	**280-801/281-413**	100
48 VDC	**280-801/281-414**	100
LED module, with red LED, 5 mm wide, gray		
24 V AC/DC	**280-801/281-415**	100
48 V AC/DC	**280-801/281-416**	100
Neon indicator module, 5 mm wide, gray		
120 V AC/DC	**280-801/281-418**	100
230 V AC/DC	**280-801/281-417**	100

Carrier terminal blocks, see page 322



Additional advantages:
- Polarized switching direction
- Terminal blocks/modules provide high-density wiring in a width of just 5 mm

For terminal blocks with side marking, see www.wagocatalog.com

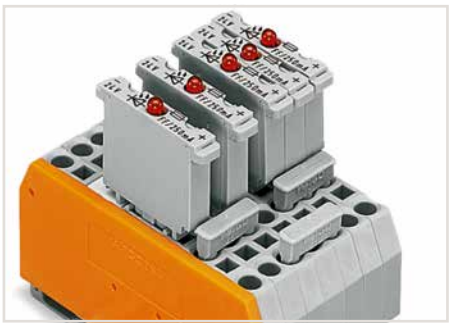

Carrier terminal blocks with component plugs, alternate comb-style jumper bars, 3-way, comb-style jumper bar

Circuit Diagrams

LED module



24 VDC **280-801/281-413**
48 VDC **280-801/281-414**

LED module

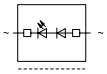

24 V AC/DC **280-801/281-415**
48 V AC/DC **280-801/281-416**

Neon indicator module

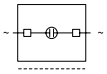

120 V AC/DC **280-801/281-418**
230 V AC/DC **280-801/281-417**

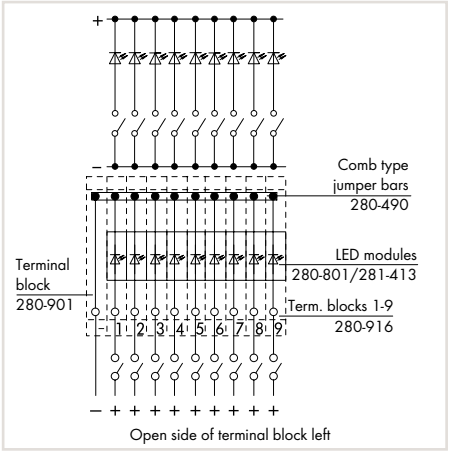

LED gate for collective fault indication – individual display

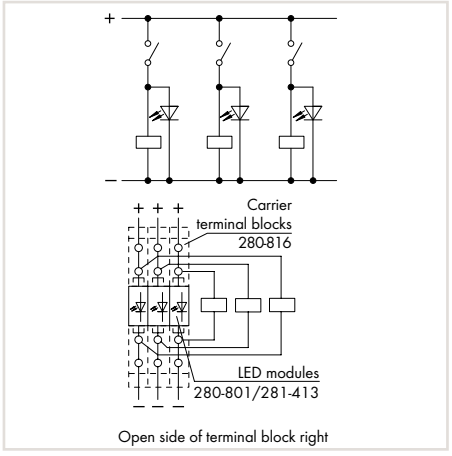

Voltage control assigned to current circuits

Pluggable LED Modules on Through Terminal Blocks, 2.5 mm²

280 Series

LED module
I_N 5.6 mA; I_F 25 mA
Neon indicator module
I_N 0.5 mA
Plug width 10 mm / 0.394 inch



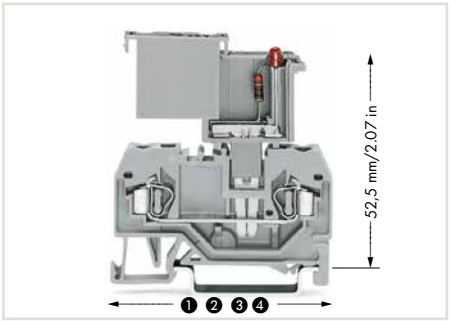

Similar to push-in type jumpers, these LED and neon indicator modules are simply pushed into the current bar's contact slots of two adjacent through terminal blocks, providing the following advantages:
- Compatibility with all 280 Series Through Terminal Blocks
- Easy retrofits for existing systems

1. Length of 280-901: 53 mm / 2.09 inch 2-conductor through terminal block, front-entry
2. Length of 280-681: 64 mm / 2.52 inch 3-conductor through terminal block, front-entry
3. Length of 280-833: 75 mm / 2.95 inch 4-conductor through terminal block, front-entry
4. Length of 280-101: 42.5 mm / 1.67 inch 2-conductor through terminal block, side-entry

	Item No.	Pack. Unit
LED module, with red LED, 10 mm wide, gray		
24 VDC	**280-803/281-413**	50
48 VDC	**280-803/281-414**	50
LED module, with red LED, 10 mm wide, gray		
24 V AC/DC	**280-803/281-415**	50
48 V AC/DC	**280-803/281-416**	50
Neon indicator module, 10 mm wide, gray		
120 V AC/DC	**280-803/281-418**	50
230 V AC/DC	**280-803/281-417**	50

Through terminal blocks, see page 323



Additional advantages:
- Separation into functional and wiring levels
- Fast replacement of other functional units

For terminal blocks with side marking, see www.wagocatalog.com

Circuit Diagrams

LED module

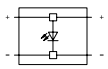

24 VDC **280-803/281-413**
48 VDC **280-803/281-414**

LED module

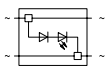

24 V AC/DC **280-803/281-415**
48 V AC/DC **280-803/281-416**

Neon indicator module

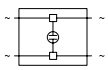

120 V AC/DC **280-803/281-418**
230 V AC/DC **280-803/281-417**

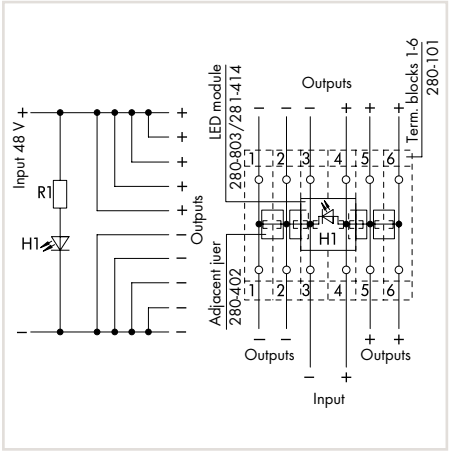

Multiple outputs with indicator lamp

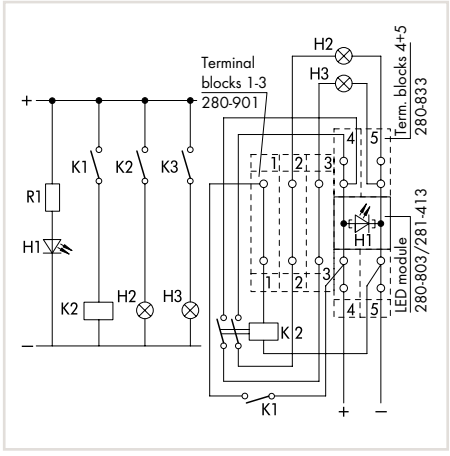

Control unit

CAGE CLAMP®

L-Type Test Plug Modules for Testing Rail-Mount Terminal Blocks, Terminal Block Width 5 mm or 6 mm, via Conductor Wire Opening

249 Series

Test plug module for rail-mount terminal blocks	Test plug module for rail-mount terminal blocks
0.08 … 1.5 mm² / 28 … 16 AWG	0.08 … 2.5 mm² / 28 … 14 AWG
Test voltage 630 V / Test current 6 A	Test voltage 630 V / Test current 6 A
Module width 5 mm / 0.197 inch These test plugs are not suitable for Ex e applications.	Module width 6 mm / 0.236 inch These test plugs are not suitable for Ex e applications.

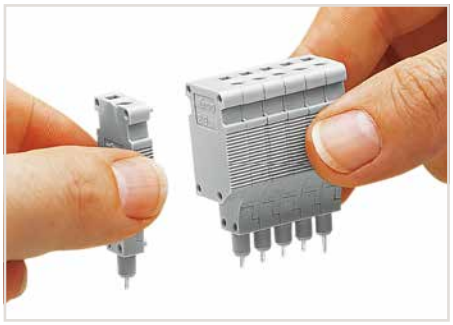

Snapping test plug and spacer modules together to assemble a multipole test plug module (max. 10 poles).





5

	Item No.	Pack. Unit
L-type test plug module, with spring-loaded contact pin, center module, snaps together		
Module width 5 mm		
gray	249-141	100 (4x25)
L-type end test plug module, with rigid contact pin, end module, snaps together		
Module width 5 mm		
gray	249-142	100 (4x25)
L-type spacer module, snaps together, bridges wired terminal block		
Module width 5 mm		
gray	249-143	100 (4x25)

	Item No.	Pack. Unit
L-type test plug module, with spring-loaded contact pin, center module, snaps together		
Module width 6 mm		
gray	249-144	100 (4x25)
L-type end test plug module, with rigid contact pin, end module, snaps together		
Module width 6 mm		
gray	249-145	100 (4x25)
L-type spacer module, snaps together, bridges wired terminal block		
Module width 6 mm		
gray	249-146	100 (4x25)

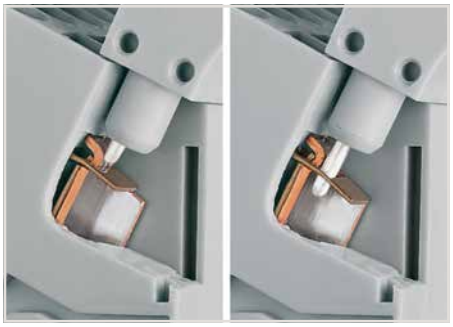

A = Center module with a spring-loaded contact pin
B = End module with a rigid contact pin

Accessories for L-Type Test Plug Modules

Appropriate marking systems: WMB/Mini-WSB/ Mini-WSB Inline (see Section 13)

		Item No.	Pack. Unit
WMB Multi marking system, white, 10 strips with 10 markers per card, 5 … 5.2 mm stretchable			
	plain	793-5501	5
Mini-WSB Quick marking system, white, 10 strips with 10 markers per card, 5 mm wide markers			
	plain	248-501	5

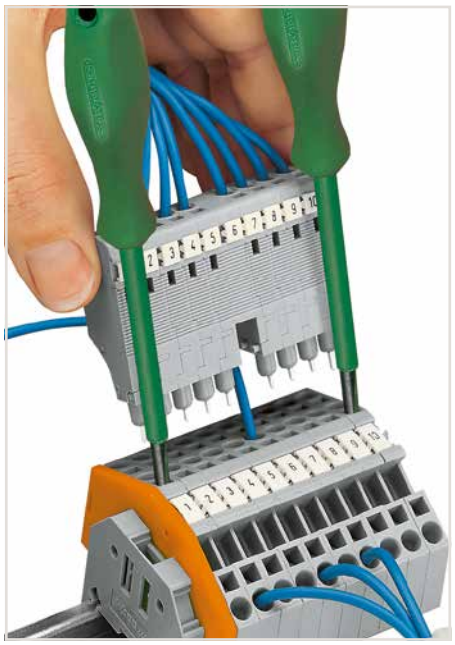

For easily testing terminal block assemblies, WAGO's L-type test plug modules with CAGE CLAMP® may be used on unwired terminal blocks. For testing, the module is assembled with spring-loaded pins in the center positions and rigid pin modules at the ends. The terminal blocks corresponding to the end position modules are opened using operating tools (as shown) – these rigid pins are then held in place by the CAGE CLAMP®.
The intermediate pins are spring-loaded and make contact with the current bars of the unwired clamping units. Clamping units needing to remain wired may be skipped by assembling a spacer in the test plug module.

Notice:
Mating direction must be observed (see picture).

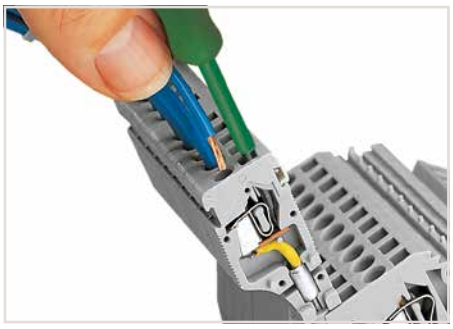

CAGE CLAMP® connection
0.08 … 1.5 mm²; 5 mm wide module
0.08 … 2.5 mm²; 6 mm wide module

CAGE CLAMP®

B-Type Test Plug Modules for Testing Rail-Mount Terminal Blocks, Terminal Block Width 5 mm or 6 mm, via Jumper Contact Slot in Current Bar

249 Series

Test plug module for rail-mount terminal blocks		Test plug module for rail-mount terminal blocks	
0.08 ... 1.5 mm²	28 ... 16 AWG	0.08 ... 2.5 mm²	28 ... 14 AWG
Test voltage 630 V	Test current 10 A	Test voltage 630 V	Test current 10 A
Module width 5 mm / 0.197 inch These test plugs are not suitable for Ex e applications.		Module width 6 mm / 0.236 inch These test plugs are not suitable for Ex e applications.	

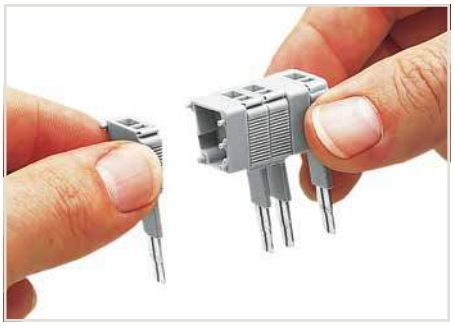

Snapping test plug and spacer modules together to assemble a multipole test plug module (max. 10 poles).





	Item No.	Pack. Unit
B-type test plug module, snaps together		
Module width 5 mm		
gray	249-106	100 (4x25)
B-type spacer module, snaps together, bridges commoned terminal blocks		
Module width 5 mm		
gray	249-107	100 (4x25)

	Item No.	Pack. Unit
B-type test plug module, snaps together		
Module width 6 mm		
gray	249-147	100 (4x25)
B-type spacer module, snaps together, bridges commoned terminal blocks		
Module width 6 mm		
gray	249-148	100 (4x25)

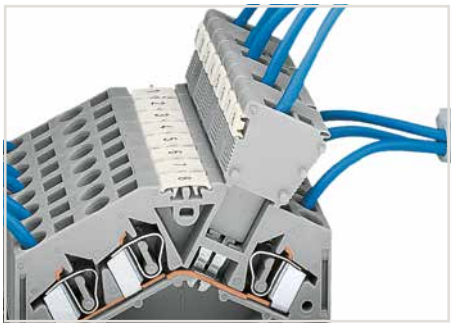

B-type test plugs are directly plugged into the jumper contact slot of the current bar.

Accessories for B-Type Test Plug Modules

Appropriate marking systems: WMB/Mini-WSB/ Mini-WSB Inline (see Section 13)

WMB Multi marking system, white, 10 strips with 10 markers per card, 5 ... 5.2 mm stretchable			
plain	793-5501	5	
Mini-WSB Quick marking system, white, 10 strips with 10 markers per card, 5 mm wide markers			
plain	248-501	5	

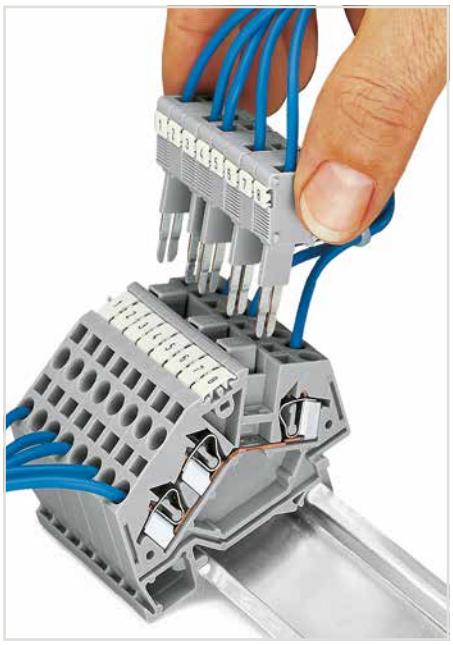

For testing individual circuits, WAGO offers a single-pole test plug accessory with CAGE CLAMP® up to 2.5 mm² (14 AWG) for direct contact with the current bar of a terminal block, or 1-pole test plug adapters for 4 mm Ø test plugs.

For serial testing on terminal block assemblies, WAGO has developed special multipole (max. 10-pole) modular test plug modules. WAGO's B-type test plug modules with CAGE CLAMP® connection are ideal for testing completely wired terminal blocks – even when using adjacent jumpers. For this testing type, the module assembly exactly matches the terminal block assembly. The test plug modules make direct contact to the jumper contact slots of the terminal blocks to be tested.

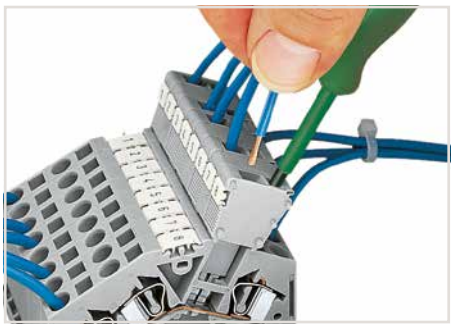

CAGE CLAMP® connection
0.08 ... 1.5 mm²; 5 mm wide module
0.08 ... 2.5 mm²; 6 mm wide module

Test Plug Modules for Testing Rail-Mount Terminal Blocks, Terminal Block Width 5 mm or 6 mm, via Jumper Contact Slot in Current Bar

Test plug module for rail-mount terminal blocks Test voltage 400 V | Test current 6 A Module width 5 mm / 0.197 inch These test plugs are not suitable for Ex e applications.	Test plug module for rail-mount terminal blocks Test voltage 400 V | Test current 6 A Module width 6 mm / 0.236 inch These test plugs are not suitable for Ex e applications.





5

	Item No.	Pack. Unit
Test plug module, snaps together Module width 5 mm		
gray	**280-418**	100 (4x25)
Spacer module, snaps together, bridges terminal blocks Module width 5 mm		
gray	**280-419**	100 (4x25)

	Item No.	Pack. Unit
Test plug module, snaps together Module width 6 mm		
gray	**281-418**	100 (4x25)
Spacer module, snaps together, bridges terminal blocks Module width 6 mm		
gray	**281-419**	100 (4x25)

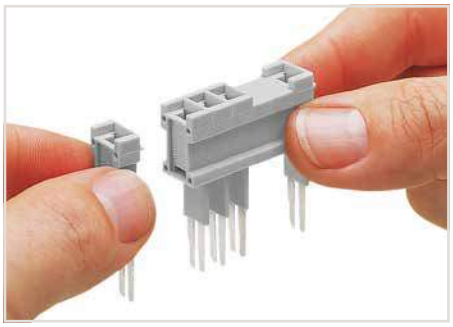

Snapping test plug and spacer modules together to assemble a multipole test plug module.

Accessories

		Item No.	Pack. Unit
Test plug, with 500 mm cable, 2 mm Ø, max. 42 V			
	red	**210-136**	50
Test plug, with 500 mm cable, 2.3 mm Ø, max. 42 V			
	yellow	**210-137**	50

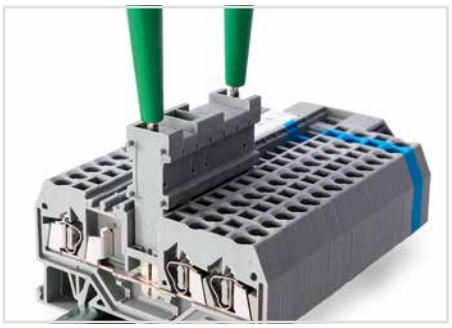

The test plug modules are directly plugged into the jumper contact slot of the current bar.

CAGE CLAMP®

B-Type Test Plug Modules for Testing Rail-Mount Terminal Blocks, Terminal Block Width 8 mm or 10 mm, via Jumper Contact Slot in Current Bar

709 Series

Test plug module for rail-mount terminal blocks
0.2 … 6 mm² | **24 … 10 AWG**
Test voltage 800 V | **Test current 32 A**

Module width 8 mm / 0.315 inch
These test plugs are not suitable for Ex e applications.

Spacer plate for rail-mount terminal blocks with 10 mm/0.394 inch module width

Module width 2 mm / 0.079 inch
These intermediate plates are not suitable for Ex e applications.







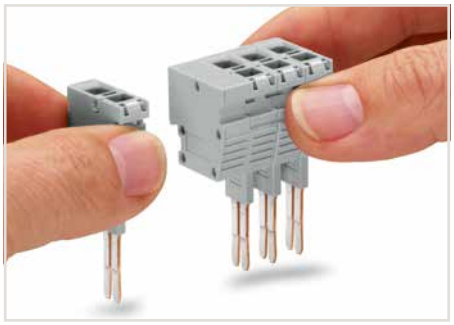

Snapping test plug and spacer modules together to assemble a multi-pole test plug module (max. 10 poles) for 8 mm terminal block width.

	Item No.	Pack. Unit
B-type test plug module, snaps together		
Module width 8 mm		
gray	**709-310**	100 (4x25)
B-type spacer module, snaps together, bridges commoned terminal blocks		
Module width 8 mm		
gray	**709-311**	100 (4x25)

	Item No.	Pack. Unit
B-type spacer plate, snaps together, snaps on B-type test plug modules (709-310) and B-type spacer modules (709-311)		
Module width 2 mm		
gray	**709-312**	100 (4x25)

Item-Specific Accessories

Strain relief plate, gray, for 8 mm wide terminal blocks



2-pole	**709-322**	100 (4x25)
4-pole	**709-324**	100 (4x25)
6-pole	**709-326**	100 (4x25)

Item-Specific Accessories

Strain relief plate, gray, for 10 mm wide terminal blocks



2-pole	**709-332**	100 (4x25)
4-pole	**709-334**	100 (4x25)
6-pole	**709-336**	100 (4x25)

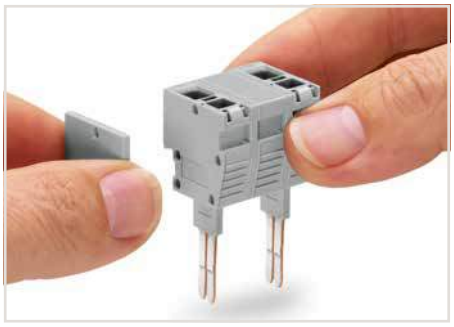

Snapping test plug and spacer modules (each with a spacer plate) together to assemble a multi-pole test plug module (max. 10 poles) for 10 mm terminal block width.

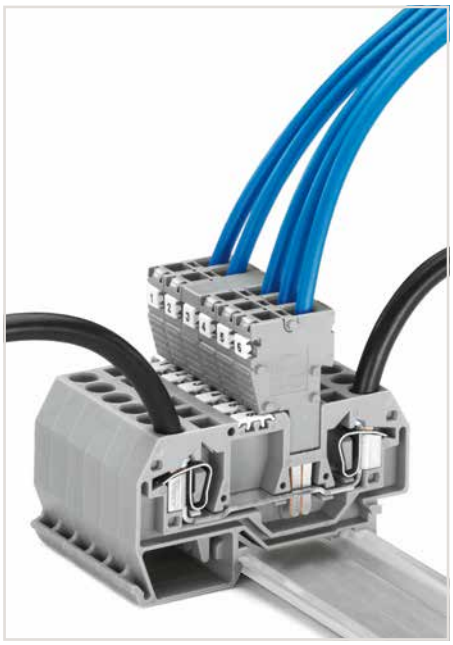

For testing individual circuits, WAGO offers a single-pole test plug accessory with CAGE CLAMP® up to 2.5 mm² (14 AWG) for direct contact with the current bar of a terminal block, or 1-pole test plug adapters for 4 mm Ø test plugs.

For serial testing on terminal block assemblies, WAGO has developed special multipole (max. 10-pole) modular test plug modules. WAGO's B-type test plug modules with CAGE CLAMP® connection are ideal for testing completely wired terminal blocks – even when using adjacent jumpers. For this testing type, the module assembly exactly matches the terminal block assembly. The test plug modules make direct contact to the jumper contact slots of the terminal blocks to be tested.



The test plug modules are directly plugged into the jumper contact slot of the current bar (picture shows 284 Series).

Banana Plugs (Only for Safety Extra-Low Voltage)

215 Series

0.08 … 2.5 mm² | 28 … 14 AWG
42 V
Test current 20 A
Measuring range category CAT I
9 … 11 mm / 0.35 … 0.43 inch



5

	Item No.	Pack. Unit
Banana plug, for 4 mm socket diameter, color mixed, 10 x orange, white, black, blue, yellow	**215-111**	50
single plugs		
Banana plug, for 4 mm socket diameter, orange	**215-211**	50
Banana plug, for 4 mm socket diameter, red	**215-212**	50
Banana plug, for 4 mm socket diameter, black	**215-311**	50
Banana plug, for 4 mm socket diameter, green	**215-411**	50
Banana plug, for 4 mm socket diameter, yellow	**215-511**	50
Banana plug, for 4 mm socket diameter, white	**215-611**	50
Banana plug, for 4 mm socket diameter, blue	**215-711**	50
Banana plug, for 4 mm socket diameter, gray	**215-811**	50
Banana plug, for 4 mm socket diameter, green-yellow	**215-911**	50



Conductor termination: Press button fully, insert stripped conductor into square entry and release.

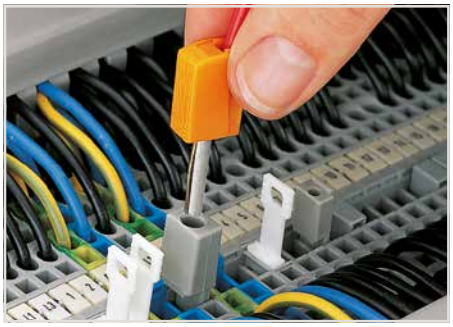

Testing with a banana plug
(picture shows 209-170 Test Plug Adapter).

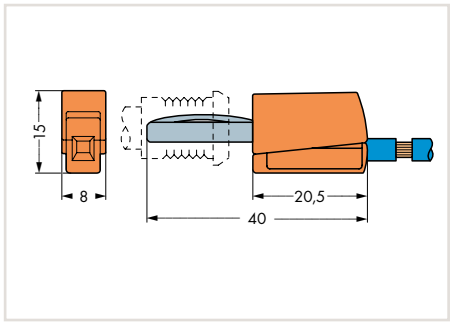

Dimensions (in mm):

Conductor Insulation Stops 0.08 … 1.5 mm² / 28 … 16 AWG

Insulation stop for all rail-mount terminal blocks featuring: Terminal block width 4 mm / 0.157 inch	Insulation stop for all rail-mount terminal blocks featuring: Terminal block width 5 mm / 0.197 inch	Insulation stop for all rail-mount terminal blocks featuring: Terminal block width 6 mm / 0.236 inch







Item No.	Pack. Unit
Insulation stop, 5 pcs/strip, 0.08 … 0.2 mm² "s" (0.14 mm² "f-st")	
◯ white **279-470**	200 (8x25)
Insulation stop, 5 pcs/strip, 0.25 mm²	
● dark gray **279-471**	200 (8x25)

The wiring of programmable logic controllers and microprocessor-operated control circuits often relies on very small, fine-stranded conductors. These conductors are highly flexible and deform when pushed against the conductor stop in terminal blocks. As a result, the conductor insulation – not the copper conductor – may be clamped, causing intermittent contact or no contact at all. Common to all terminal block types currently offered, this problem creates unnecessary downtime for troubleshooting.

Item No.	Pack. Unit
Insulation stop, 5 pcs/strip, 0.08 … 0.2 mm² "s" (0.14 mm² "f-st")	
◯ white **280-470**	200 (8x25)
Insulation stop, 5 pcs/strip, 0.25 … 0.5 mm²	
◯ light gray **280-471**	200 (8x25)
Insulation stop, 5 pcs/strip, 0.75 … 1 mm²	
● dark gray **280-472**	200 (8x25)

The solution: an insulation stop for rail-mount terminal blocks. Insulation stops automatically bundle the cores of fine-stranded conductors when inserted into the clamping unit, preventing splaying. This also limits the conductor entry to a defined cross sectional area – ensuring the actual conductor, not the insulation, will enter the clamping unit.

Item No.	Pack. Unit
Insulation stop, 5 pcs/strip, 0.08 … 0.2 mm² "s" (0.14 mm² "f-st")	
◯ white **281-470**	200 (8x25)
Insulation stop, 5 pcs/strip, 0.25 … 0.5 mm²	
◯ light gray **281-471**	200 (8x25)
Insulation stop, 5 pcs/strip, 0.25 … 1.5 mm²	
● dark gray **281-472**	200 (8x25)

Insulation stops are available as dividable 5-pole strips for 279, 280/780/870/880 and 281/781 Series Rail-Mount Terminal Blocks.
Insulation stop usage will not affect the conductor strip lengths for the aforementioned rail-mount terminal blocks.

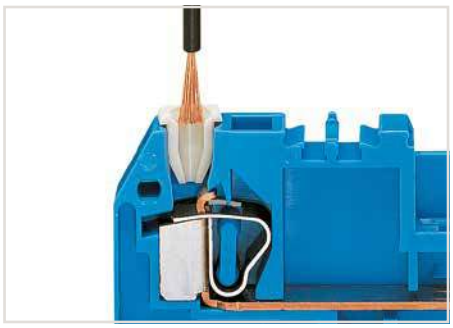

Insert stripped, untwisted conductor into insulation stop.

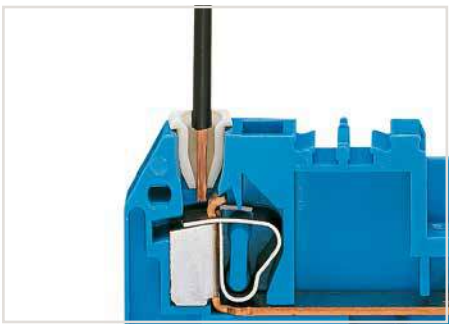

The conductor is bundled.

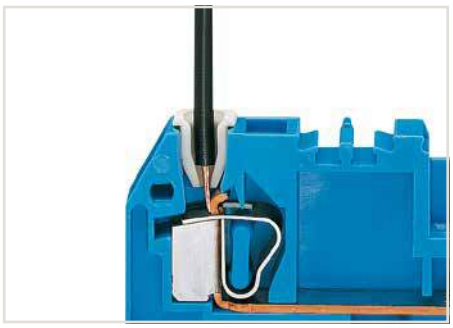

The conductor insulation is prevented from being pushed into the clamping unit by the positive stop.

Comb-Style Jumper Bars and Alternate Comb-Style Jumper Bars Operating Tool

Comb-style jumper bars and alternate comb-style jumper bars for 279 Series I_N = I_N terminal block Operating tool	Comb-style jumper bars and alternate comb-style jumper bars for 280/769/780/880 Series I_N = I_N terminal block Operating tool	Comb-style jumper bars and alternate comb-style jumper bars for 281/781 Series I_N = I_N terminal block Operating tool







5

	Item No.	Pack. Unit
Comb-style jumper bar, insulated		
◯ 2-way	**279-482**	200 (8x25)
◯ 3-way	**279-483**	200 (8x25)
◯ 10-way	**279-490**	50 (2x25)
Alternate comb-style jumper bar, insulated		
◯ 2-way	**279-492**	200 (8x25)
Operating tool, of insulating material		
2-way	**279-432**	1
3-way	**279-433**	1
10-way	**279-440**	1

	Item No.	Pack. Unit
Comb-style jumper bar, insulated		
◯ 2-way	**280-482**	200 (8x25)
◯ 3-way	**280-483**	200 (8x25)
◯ 10-way	**280-490**	50 (2x25)
Alternate comb-style jumper bar, insulated		
◯ 2-way	**280-492**	200 (8x25)
Operating tool, of insulating material		
2-way	**280-432**	1
3-way	**280-433**	1
10-way	**280-440**	1

	Item No.	Pack. Unit
Comb-style jumper bar, insulated		
◯ 2-way	**281-482**	100 (4x25)
◯ 3-way	**281-483**	100 (4x25)
◯ 5-way	**281-485**	100 (4x25)
◯ 10-way	**281-490**	50 (2x25)
Alternate comb-style jumper bar, insulated		
◯ 2-way	**281-492**	100 (4x25)
Operating tool, of insulating material		
2-way	**280-432**	1
3-way	**280-433**	1
5-way	**281-440**	1

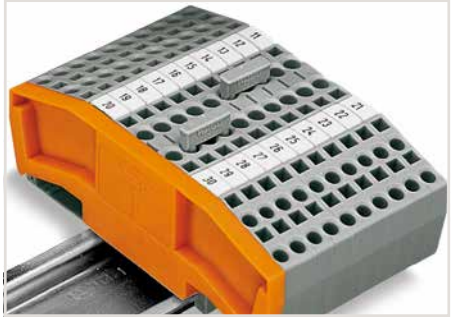

Disconnect/test terminal blocks, 10-way, comb-style jumper bar



4-conductor through terminal blocks, angled type – formation of groups with 3-way, comb-style jumper bars

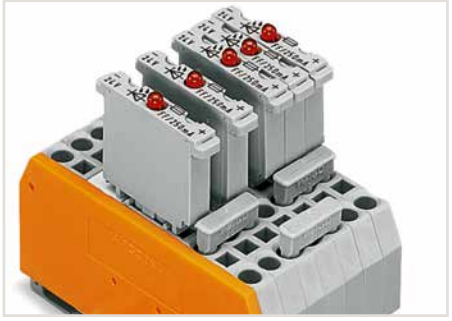

Carrier terminal blocks with component plugs, alternate comb-style jumper bars, 3-way, comb-style jumper bar

Staggered Jumpers and Push-In Type Wire Jumpers

Staggered jumper	Push-in type wire jumper
Nominal voltage 400 V/6 kV/3	800 V/8 kV/3 I_N 9 A Conductor size 0.75 mm²



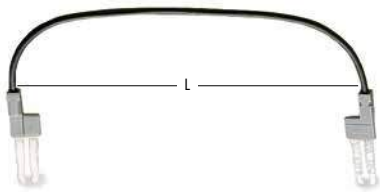

❶ Suitable for Ex e II applications
max. rated voltage 275 V
23 A for 2-conductor terminal blocks
22 A for 3-conductor terminal blocks
20 A for 4-conductor terminal blocks
(see Section 14)

❷ Suitable for Ex e II applications
max. rated voltage 275 V, 26 A
(see Section 14)

	Item No.	Pack. Unit		Item No.	Pack. Unit
Staggered jumper, insulated, I_N 24 A			Push-in type wire jumper, insulated		
Spacing: 5 mm			Wire length of wire jumpers:		
◯ from 1 to 2	**780-452** ❶	100 (4x25)	L = 60 mm	**249-125**	10
◯ from 1 to 3	**780-453** ❶	100 (4x25)			
◯ from 1 to 4	**780-454** ❶	100 (4x25)			
◯ from 1 to 5	**780-455** ❶	50 (2x25)			
◯ from 1 to 6	**780-456** ❶	50 (2x25)			
◯ from 1 to 7	**780-457** ❶	50 (2x25)			
◯ from 1 to 8	**780-458** ❶	50 (2x25)			
Staggered jumper, insulated, I_N 32 A			Push-in type wire jumper, insulated		
Spacing: 6 mm			Wire length of wire jumpers:		
◯ from 1 to 2	**781-452** ❷	100 (4x25)	L = 110 mm	**249-126**	10
◯ from 1 to 3	**781-453** ❷	100 (4x25)			
◯ from 1 to 4	**781-454** ❷	100 (4x25)			
◯ from 1 to 5	**781-455** ❷	50 (2x25)			
◯ from 1 to 6	**781-456** ❷	50 (2x25)			
			Push-in type wire jumper, insulated		
			Wire length of wire jumpers:		
			L = 250 mm	**249-127**	10
			Note:		
			Push down the wire jumper until fully inserted.		

Wire jumpers
When installing machines or control systems, it is often necessary to make an additional connection between two terminal blocks that are not next to each other on the rail. In such cases, WAGO's touch-proof, push-in type wire jumpers are the ideal solution.

These jumpers are compatible with the following rail-mount terminal blocks:
- 279 Series (1.5 mm²/16 AWG),
- 280/775/780 Series (2.5 mm²/14 AWG)
- 281/769/776/777/781 and 880 Series (4 mm²/12 AWG)

They are available in three conductor lengths (60, 110 and 250 mm), allowing up to 60 terminal blocks to be commoned depending on their width (see table below).

Terminal Blocks Series	Wire Jumpers Item No.	"n"
279 (1.5 mm²/16 AWG)	249-125 249-126 249-127	13 25 60
280, 775, 780 (2.5 mm²/14 AWG) 769, 880 (4 mm²/12 AWG)	249-125 249-126 249-127	10 20 48
281, 781, 776, 777 (4 mm²/12 AWG)	249-125 249-126 249-127	9 17 40

"n" = number of 279, 280/769/780/880 and 281/781 Series Rail-Mount Terminal Blocks that can be skipped with a wire jumper.

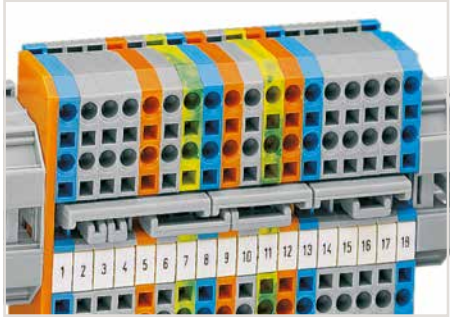

Staggered jumpers for sophisticated circuit requirements – push jumpers down until fully inserted.

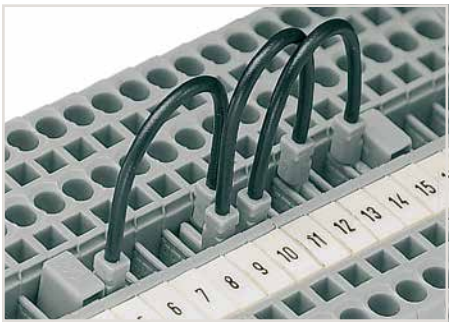

Compared with the 279 Series, the 280/775/780 and 281/776/777/781 Series can also accommodate two wire jumpers, allowing the use of commoning chains. Furthermore, the 280/769/775/780/880 and 281/776/777/781 Series allow both wire jumper and adjacent jumper to be simultaneously plugged into a same terminal block.

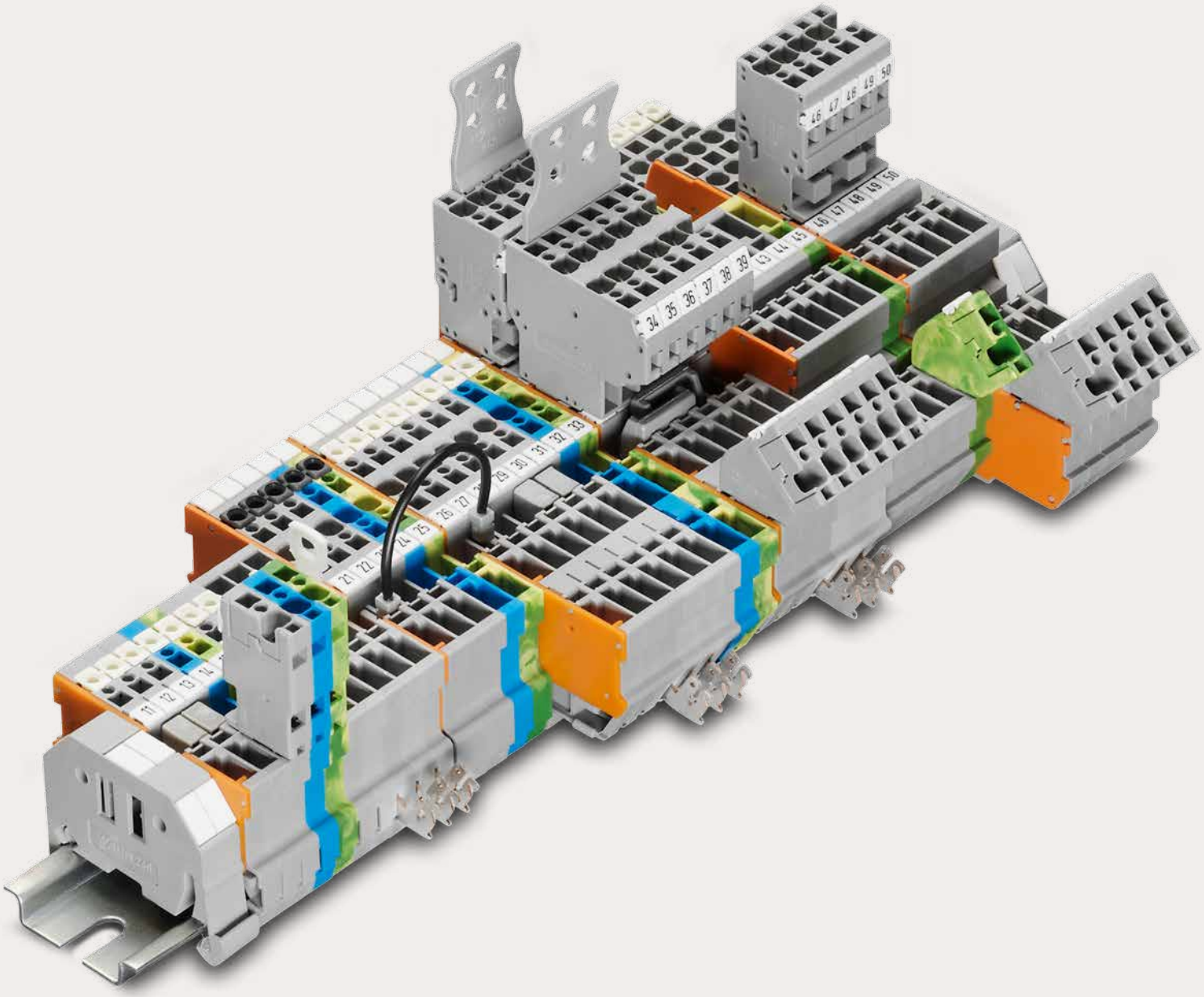

Rail-Mount Terminal Blocks with a Pluggable Connector, X-COM®-SYSTEM, Classic

CAGE CLAMP®

Rail-Mount Terminal Blocks with a Pluggable Connector, X-COM®-SYSTEM, Classic

Front-Entry Wiring

			Page
	**Carrier Terminal Blocks** 0.08 … 4 mm² (28 … 12 AWG)	769 Series	342
	**Carrier Terminal Blocks with Three Jumper Positions** 0.08 … 4 mm² (28 … 12 AWG)	769 Series	352
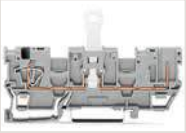	**Disconnect Carrier Terminal Blocks with Two Jumper Positions** 0.08 … 4 mm² (28 … 12 AWG)	769 Series	354
	**Diode and LED Carrier Terminal Blocks** 0.08 … 4 mm² (28 … 12 AWG)	769 Series	356
	**Carrier Terminal Blocks for Pluggable Modules** 0.08 … 4 mm² (28 … 12 AWG)	769 Series	364
	**Double-Deck Carrier Terminal Blocks** 0.08 … 2.5 (4 “f-st”) mm² (28 … 12 AWG)	870 Series	372
	**Male Connectors with CAGE CLAMP® Connection** 0.08 … 4 mm² (28 … 12 AWG)	769 Series	382
	**Male Headers with Solder Pins** 0.08 … 4 mm² (28 … 12 AWG)	769 Series	386
	**Female Plugs with and without Lateral Locking Levers** 0.08 … 4 mm² (28 … 12 AWG)	769 Series	392
	**Female Plugs for Self-Assembly** 0.08 … 4 mm² (28 … 12 AWG)	769 Series	396
	**Pre-Assembled Female Plugs** 0.08 … 4 mm² (28 … 12 AWG)	769 Series	398
	**Strain Relief Housings**	769 Series	399

WAGO-X-COM®-SYSTEM
COM-bining Connectors and Rail-Mount Terminal Blocks

The WAGO-X-COM®-SYSTEM is the perfect solution for switchgear and control applications.



X-COM® is designed for a **rated current up to 16/32 A at U_N 500 V** and **4 mm² (12 AWG) rated cross section (up to 600 V, 10 A, and 12 AWG UL)**. This offers an alternative to heavy-duty rectangular and circular connectors used in power wiring applications where electrical compliance is more important than a high degree of protection.
X-COM® conveniently enables the use of pre-assembled connector systems and offers the following advantages:

- During manufacturing: Pre-wired subassemblies can be tested before installation.
- During assembly: Pre-assembled pluggable cable harnesses help solve time and space issues on site. Connector systems with protection against mismating can be handled by installers of all skill levels.
- During maintenance: Subassemblies can be replaced quickly and without errors.

The X-COM®-SYSTEM consists of rail-mount carrier terminal blocks, male connectors and female plugs with different mounting systems, as well as male headers with solder pins. Pin spacing is generally 5 mm (0.197 inch).

6

Protection Against Mismating and Accidental Contact

The WAGO-X-COM®-SYSTEM is **fully protected against accidental contact – even when plugs are disconnected**. This significantly simplifies the planning of power distribution.
Furthermore, the whole system is **100 % protected against mismating**. Its coding, without the loss of any poles, prevents mismating of male connectors and female plugs having the same number of poles.

Carrier Terminal Blocks

Carrier terminal blocks are available as through terminal blocks, double-deck terminal blocks and ground conductor terminal blocks with automatic contact to the carrier rail.
Carrier terminal blocks with specialty functions are available in disconnect, diode and LED versions. Carrier terminal blocks equipped with an additional socket can accommodate a wide range of pluggable electronic modules (e.g., relays, optocouplers, signal conditioners).
Depending on the type of terminal block, the carrier terminal blocks are equipped with one to three jumper positions for commoning signals via insulated push-in type jumpers.

Applications

Equipment connection to the WAGO-X-COM®-SYSTEM for:

- Frequency converters
- Thyristor actuators
- Soft start motor controllers
- Motors
- Phase filters
- Power subassemblies
- Power supply units
- Uninterruptible power supply (UPS)
- “Panel-to-door” wiring
- Pluggable high-current, feed-through connections
- Flying leads

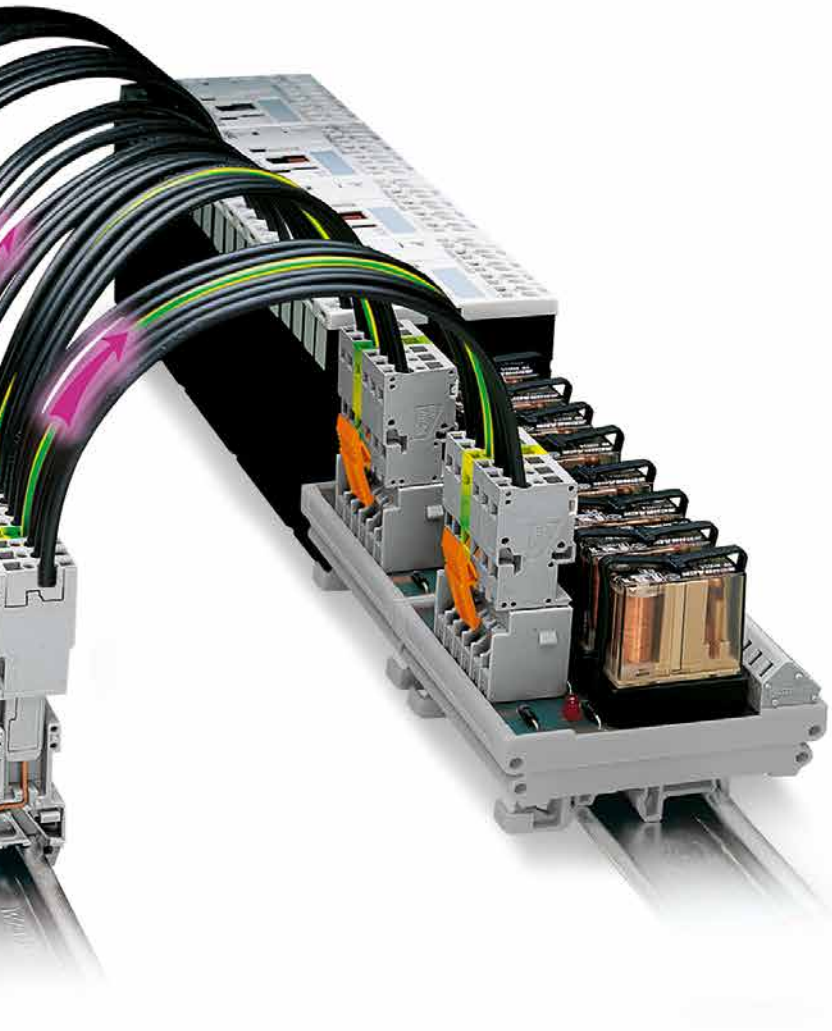

Female Plugs
The mating half of the carrier terminal blocks consists of modular female plugs (1- to 15-pole, 1-/2-conductor, straight/angled). Angled female plugs combined with double-deck terminal blocks offer high-density wiring and reduce overall terminal block height. A jumper slot simplifies potential distribution.
This makes commoning supply lines particularly easy as the power supply of downstream subassemblies is maintained even after female plugs have been removed.

1-Pole Female Plugs
Special 1-pole female plugs can carry the full rated current of the terminal blocks for many applications:
- as test plug adapters
- as connectors for motor lead tests
- for all types of patchboard applications
- for the creation of multipole prototypes
- for phase selection of 230 V loads in a three-phase network without interfering with the wiring
- for single-pole power supply in commercial or recreational vehicles. The grounding of all electrical components is connected through the chassis

Male Connectors/Headers
Male connectors are available with snap-in mounting feet for panel mounting, with mounting flanges for feedthrough applications or without mounting elements for flying leads. Strain relief plates are available as accessories.
Subassemblies on printed circuit boards can be integrated into the system wiring using male headers with solder pins. As a result, parts can be exchanged quickly without wiring errors.

Degree of Protection
Mated: IP20
Unmated: IP20
Temperature range:
–35 … +100 °C

X-COM®-SYSTEM
Carrier Terminal Blocks and Female Plugs, 769 Series
Description and Installation

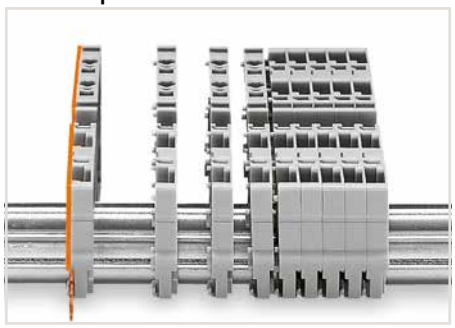

Snap individual carrier terminal blocks onto the carrier rail and slide together.

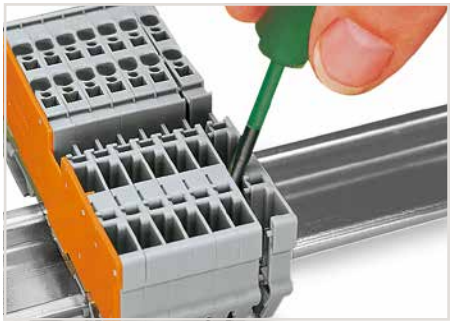

Open the assembly by laterally sliding a block via operating tool and remove terminal block via release lever.

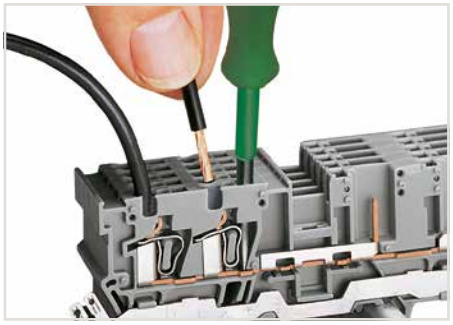

Carrier terminal block: Insert/remove conductor via operating tool (3.5 x 0.5 mm blade).



Coding a female plug by removing coding finger(s) via cutting tool. Do not remove the first and last coding fingers or use an additional locking lever.

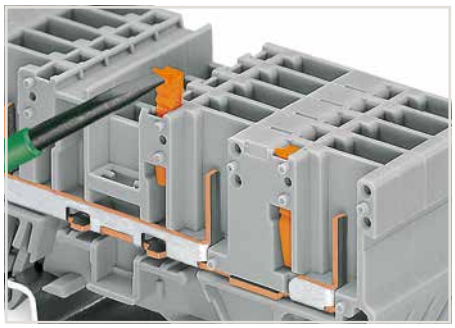

Snap coding pin in proper direction on carrier terminal block.
Shown: Coding pin removal from carrier terminal block.

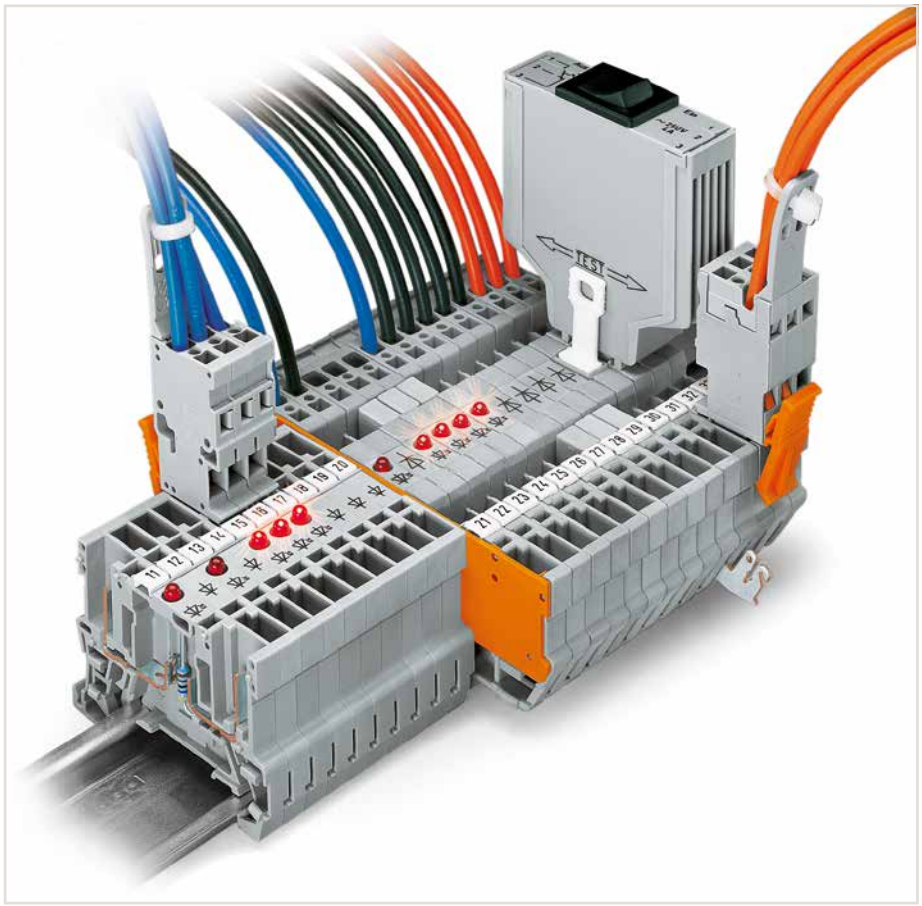

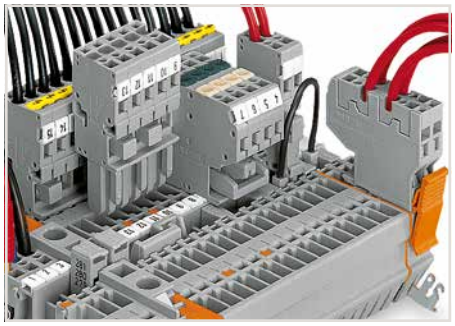

Commoning with adjacent or staggered jumpers – push jumpers down until fully inserted.

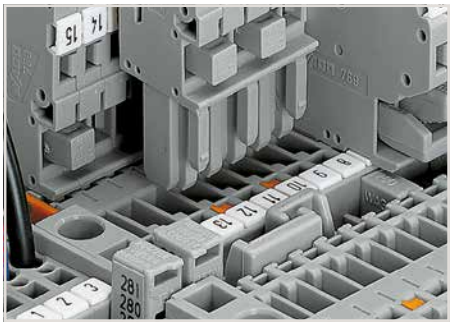

Commoning carrier terminal blocks via staggered jumpers.

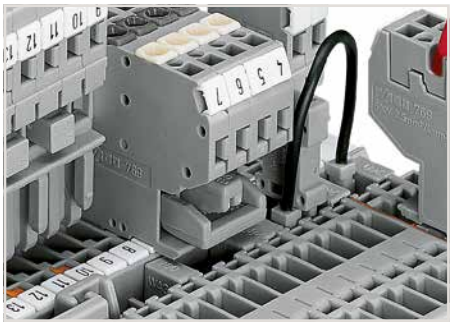

Commoning a 2-conductor female plug via staggered jumper and carrier terminal blocks via adjacent jumpers.



CAGE CLAMP® terminates the following copper conductors:
solid



stranded



fine-stranded, also with tinned single strands

For aluminum conductors, see notes in Section 14. When using ferrules, the max. conductor cross section accommodated is one size smaller than max. rating of terminal block.

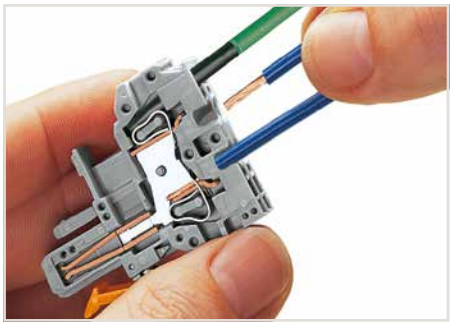

CAGE CLAMP® connection
Female plug: Inserting/removing a conductor via operating tool.
Operation 90° to conductor is also possible.
With ferruled conductors, it is necessary to use a terminal block one size smaller than the conductor's nominal cross section.

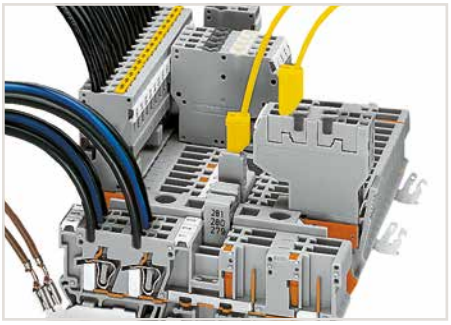

Testing via 2 or 2.3 mm Ø test plugs.

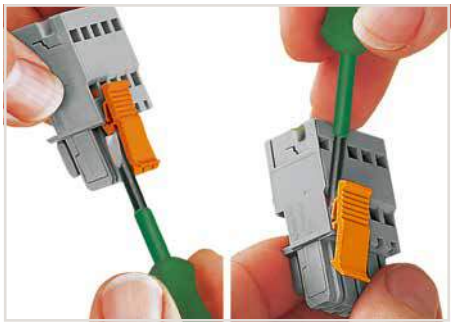

Locking/releasing a lever.

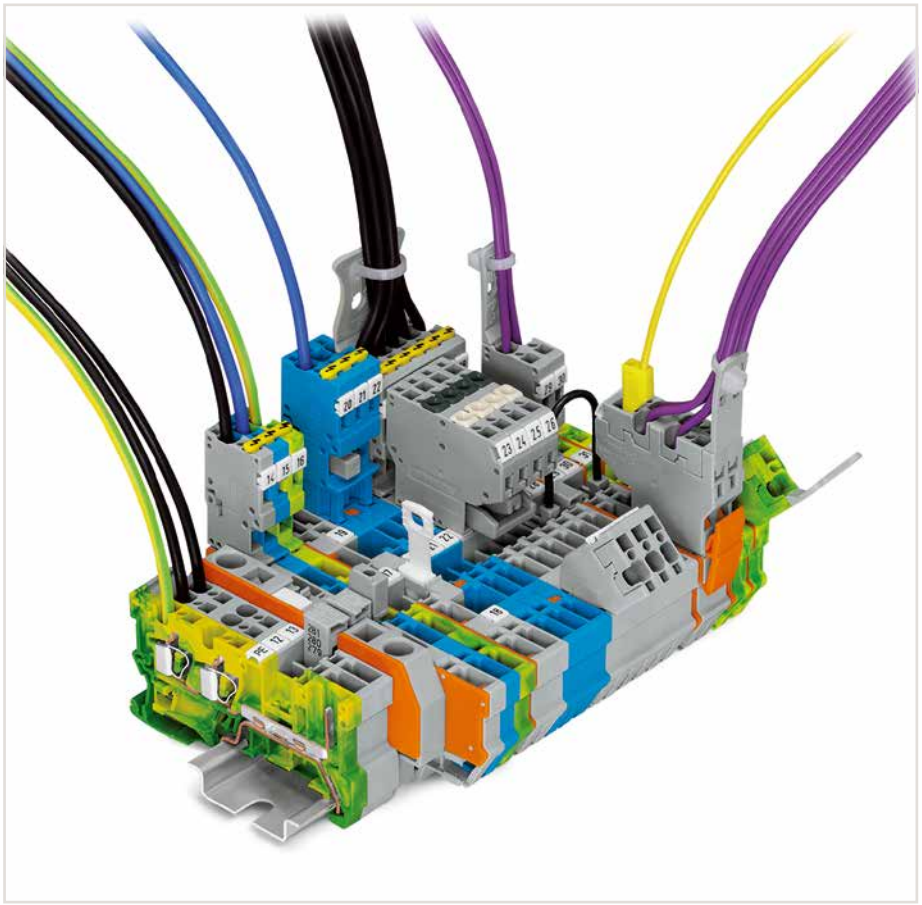

Note: Female plugs used according to the regulations shall not be connected/disconnected when live or under load.

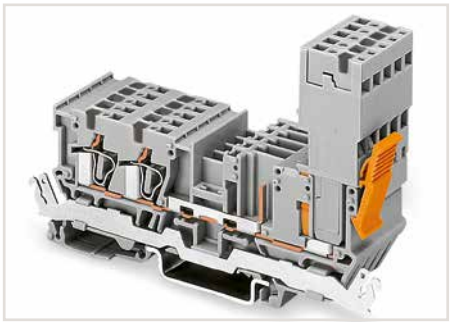

Female plug secured with locking lever on the terminal block side.



Removing a female plug via conductor bundle provided with strain relief plate.

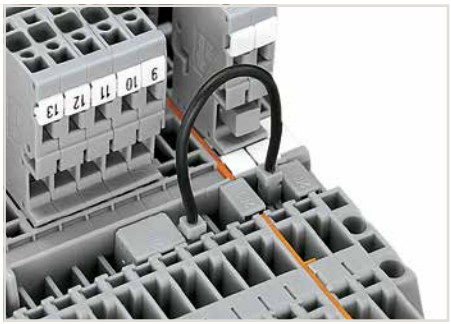

Commoning carrier terminal blocks via push-in type wire jumpers or adjacent jumpers – even over an intermediate plate.

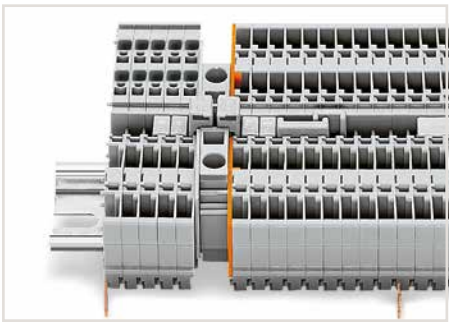

Commoning "supply terminal blocks" (up to 10 mm²/8 AWG) with carrier terminal blocks via step-down jumpers.



Commoning 1-conductor female plugs via miniature adjacent jumpers.



fine-stranded, tip-bonded



fine-stranded, with ferrule (gastight crimped)



fine-stranded, with pin terminal (gastight crimped)

X-COM®-SYSTEM, 769 Series
Carrier Terminal Blocks, Female Plugs, Male Headers and Male Connectors
Range overview



1-conductor/1-pin carrier terminal block
1-connector female plug, straight*
*1-conductor angled female plug is also possible!

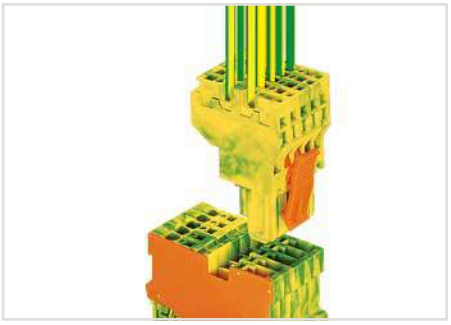

1-conductor/1-pin ground carrier terminal block
2-conductor female plug, green-yellow

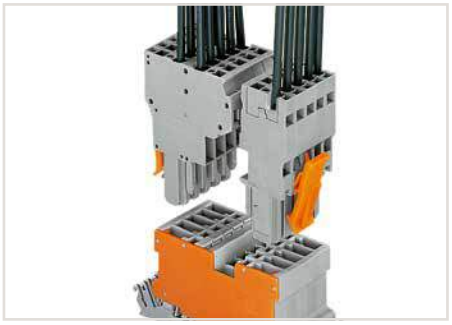

2-pin carrier terminal block with shield contact
2-conductor female plug
1-connector female plug, straight*
*1-conductor angled female plug is also possible!

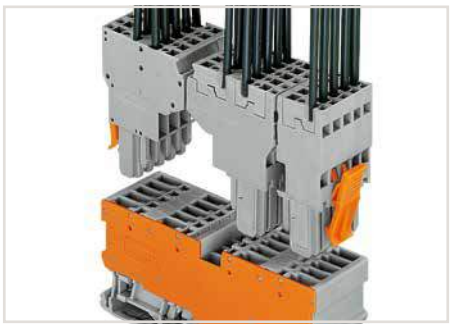

4-pin carrier terminal block
2-conductor female plug
1-connector female plug, straight

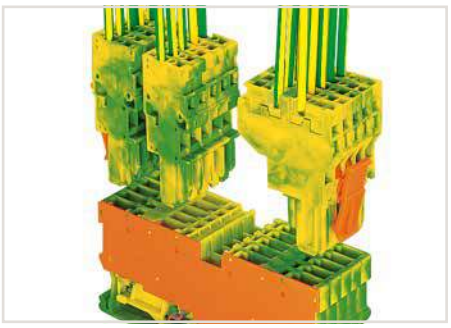

4-pin ground carrier terminal block
1-connector female plug, straight
2-conductor female plug

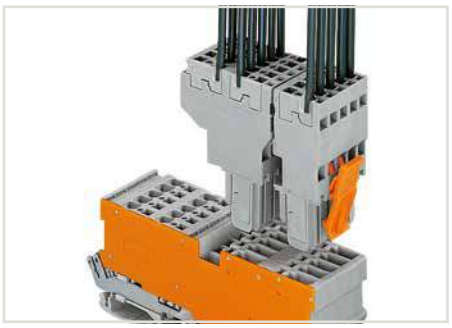

2-conductor/2-pin carrier terminal block with shield contact
2-conductor female plug
1-connector female plug, straight

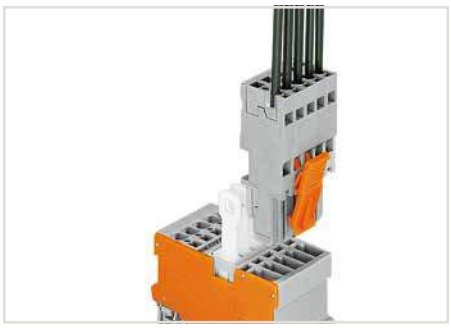

1-conductor/1-pin disconnect carrier terminal block
1-connector female plug, straight*
*1-conductor angled female plug is also possible!

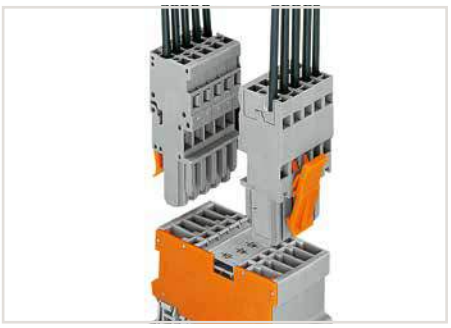

2-pin diode carrier block
1-connector female plug, straight*
*1-conductor angled female plug is also possible!

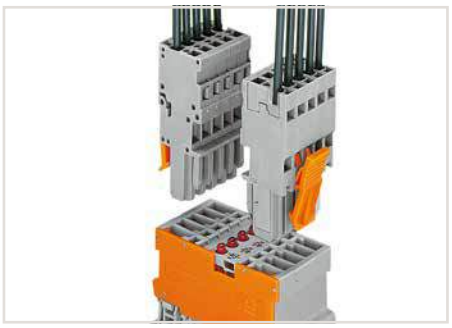

2-pin LED carrier block
1-connector female plug, straight*
*1-conductor angled female plug is also possible!

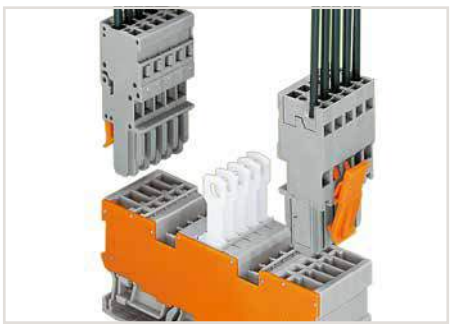

2-pin disconnect carrier terminal block with two jumper positions
1-connector female plug, straight*
*1-conductor angled female plug is also possible!

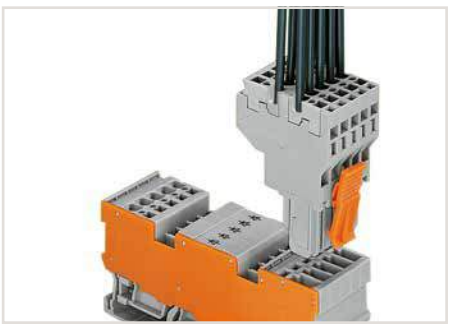

1-conductor/1-pin diode carrier terminal block with two jumper positions
2-conductor female plug

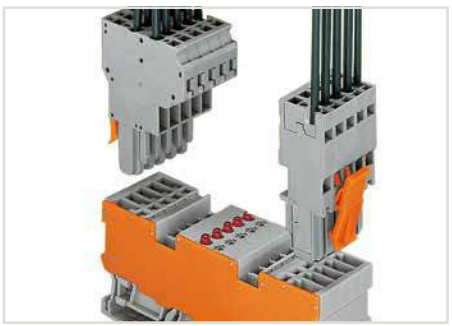

2-pin LED carrier terminal block with two jumper positions
2-conductor female plug
1-connector female plug, straight

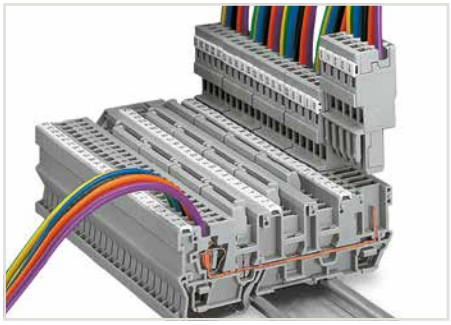

1-conductor/1-pin carrier terminal block with three jumper positions
1-connector female plug, straight*
*1-conductor angled female plug is also possible!



Male connector with CAGE CLAMP® connection
1-connector female plug, straight

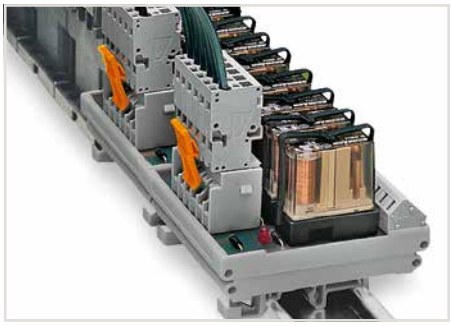

Male headers with straight solder pins and 1-conductor female plugs (picture shows a relay module)



1-conductor/1-pin carrier terminal block with two jumper positions
1-connector female plug, straight*
Fuse plug, 6 mm wide (every other terminal block)
*1-conductor angled female plug is also possible!

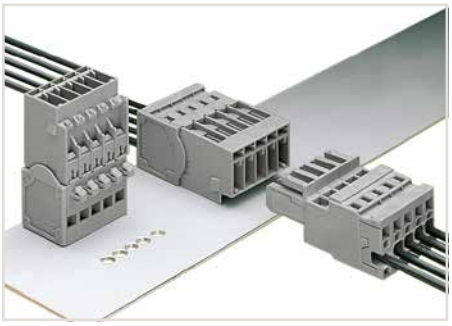

Male connector with CAGE CLAMP® connection and snap-in mounting feet
1-connector female plug, straight

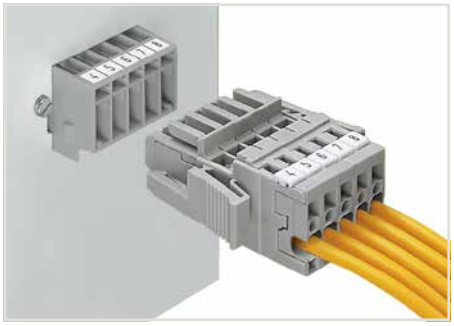

Male header and 1-conductor female plug with lateral locking levers

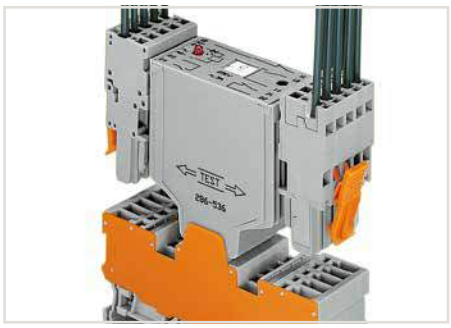

2-pin terminal block for pluggable modules with two jumper positions and separator plate
1-connector female plug, straight*
Relay plug, 25 mm wide
*1-conductor angled female plug is also possible!

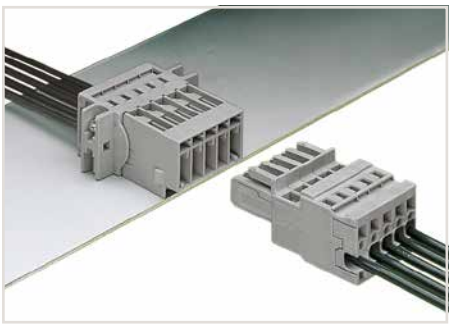

Male connector with CAGE CLAMP® and mounting flanges
1-connector female plug, straight

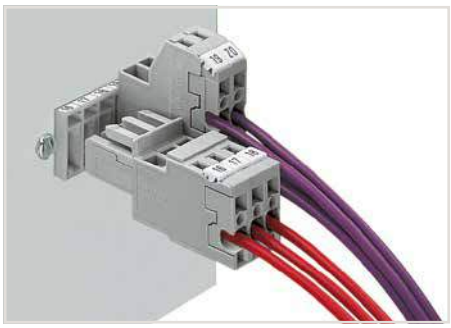

Male header with feedthrough flanges
1-conductor female plug
2-conductor female plug

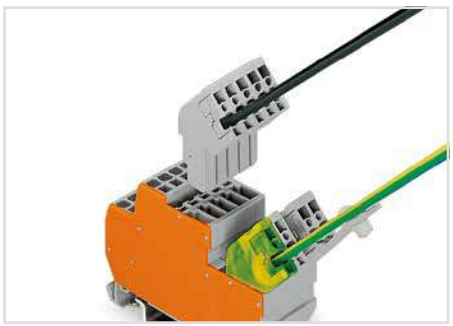

1-conductor/1-pin, double-deck carrier terminal block
1-conductor female plug, angled*
*1-conductor straight female plug is also possible!

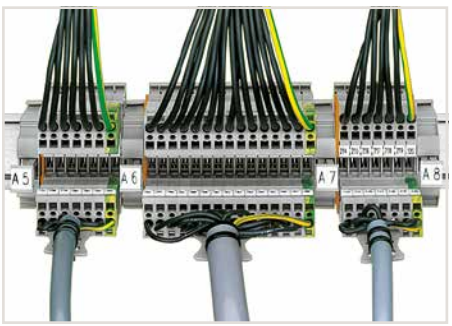

Installing cables in a cables in a switch cabinet.
The cables are installed **with** the connected female plugs and are directly plugged in the carrier terminal blocks.



Cable entry in the base of the switch cabinet, with separate strain relief, movable IP54 bottom plates sealed with sponge rubber (e.g., by Rittal)

CAGE CLAMP®

X-COM®-SYSTEM
1-Conductor/1-Pin Carrier Terminal Blocks
4 mm², 769 Series

0.08 … 4 mm²	28 … 12 AWG
500 V/6 kV/3 ❶	300 V, 20 A
I_N 32 A ❷	300 V, 20 A
Terminal block width 5 mm / 0.197 inch	
8 … 9 mm / 0.31 … 0.35 inch	

0.08 … 4 mm²	28 … 12 AWG
Terminal block width 5 mm / 0.197 inch	
8 … 9 mm / 0.31 … 0.35 inch	

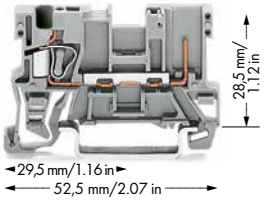

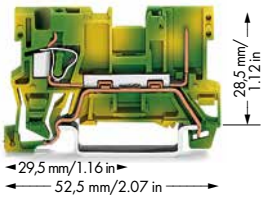

❶ 500 V = rated voltage
6 kV = rated surge voltage
3 = pollution degree
250 V / 4 kV / 3 =
Nominal voltage with shield contact
(see Section 14)

❷ Current-carrying capacity curves, see page 400 and upon request

❸ See application notes for:
Insulation stop, page 331
Staggered jumper, page 333
Push-in type wire jumper, page 333
Test plug modules, page 327

6

1-conductor/1-pin carrier terminal block

	Item No.	Pack. Unit
gray	769-176	100
blue	769-176/000-006	100

1-conductor/1-pin carrier terminal block, with shield contact, (no picture)

	Item No.	Pack. Unit
gray	769-231 ❶	50

1-conductor/1-pin ground carrier terminal block

	Item No.	Pack. Unit
green-yellow	769-237	100

Item-Specific Accessories

Protective warning marker, with black high-voltage symbol, for 5 terminal blocks



	Item No.	Pack. Unit
yellow	280-415	100 (4x25)

769 Series Accessories

Appropriate marking system:
Mini-WSB/Mini-WSB Inline (see Section 13)

End and intermediate plate, 1.1 mm thick



	Item No.	Pack. Unit
orange	769-308	100 (4x25)
gray	769-307	100 (4x25)

Insulation stop, 5 pcs/strip, 0.08 … 0.2 mm² "s" (0.14 mm² "f-st") ❸



	Item No.	Pack. Unit
white	769-470	200 (8x25)

Insulation stop, 5 pcs/strip, 0.25 … 0.5 mm² ❸



	Item No.	Pack. Unit
light gray	769-471	200 (8x25)

Insulation stop, 5 pcs/strip, 0.75 … 1 mm² ❸



	Item No.	Pack. Unit
dark gray	769-472	200 (8x25)

Coding pin, for coding female plugs



	Item No.	Pack. Unit
orange	769-435	100 (4x25)

Adjacent jumper, insulated, I_N = I_N terminal block



	Item No.	Pack. Unit
gray	280-402	200 (8x25)

Alternate jumper, insulated, I_N = I_N terminal block



	Item No.	Pack. Unit
gray	280-409	100 (4x25)

Staggered jumper, insulated, Spacing: 5 mm, I_N 24 A ❸



	Item No.	Pack. Unit
from 1 to 2	780-452	100 (4x25)
from 1 to 3	780-453	100 (4x25)
from 1 to 4	780-454	100 (4x25)
from 1 to 5	780-455	50 (2x25)
from 1 to 6	780-456	50 (2x25)
from 1 to 7	780-457	50 (2x25)
from 1 to 8	780-458	50 (2x25)

Push-in type wire jumper, insulated, wire size 0.75 mm², I_N 9 A ❸



	Item No.	Pack. Unit
L = 60 mm	249-125	10
L = 110 mm	249-126	10
L = 250 mm	249-127	10

Test plug module, snaps together, 5 mm wide ❸



	Item No.	Pack. Unit
gray	280-418	100 (4x25)

Spacer module, snaps together, 5 mm wide



	Item No.	Pack. Unit
gray	280-419	100 (4x25)

Accessories

Test plug, with 500 mm cable, 2 mm Ø, max. 42 V



	Item No.	Pack. Unit
red	210-136	50

Test plug, with 500 mm cable, 2.3 mm Ø, max. 42 V



	Item No.	Pack. Unit
yellow	210-137	50

Test plug adapter, 5 mm wide, for 210-137 Test Plug (2.3 mm Ø), for 1.5 … 4 mm² terminal blocks



	Item No.	Pack. Unit
gray	280-404	100 (4x25)

Pin cover, with Mini-WSB marker slot



	Item No.	Pack. Unit
gray	769-438	100 (4x25)
orange	769-439	100 (4x25)

1-conductor female plug, straight



	Item No.	Pack. Unit
gray	769-101	200

1-conductor female plug, angled



	Item No.	Pack. Unit
gray	769-101/022-000	200

2-conductor female plug



	Item No.	Pack. Unit
gray	769-121	100

Mini-WSB Quick marking system, white, 10 strips with 10 markers per card, 5 mm wide markers



	Item No.	Pack. Unit
plain	248-501	5

Screwless end stop, for DIN-35 rail, 6 mm wide



	Item No.	Pack. Unit
gray	249-116	100 (4x25)

Screwless end stop, for DIN-35 rail, 10 mm wide



	Item No.	Pack. Unit
gray	249-117	50 (2x25)

CAGE CLAMP®

X-COM®-SYSTEM
1-Conductor/1-Pin Carrier Terminal Blocks and 1-/2-Conductor Female Plugs
Types of Assembly



1-conductor female plug
Carrier terminal blocks can be commoned via 280 and 780 Series Jumpers and tested using a 280 Series Test Plug Adapter.

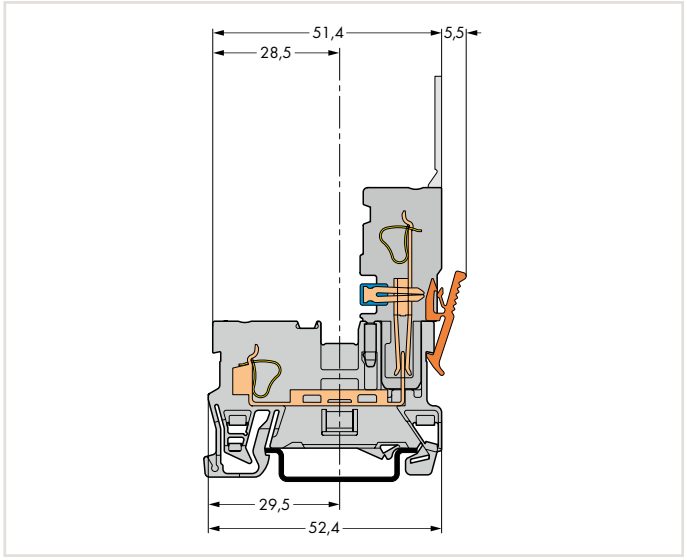

Carrier terminal block



2-conductor female plug
Carrier terminal blocks can only be commoned via 280 Series Adjacent and Alternate Jumpers.

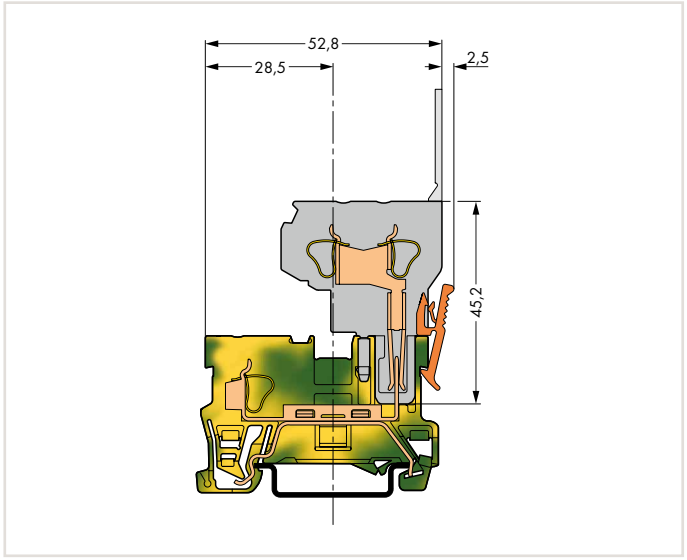

Ground carrier terminal block

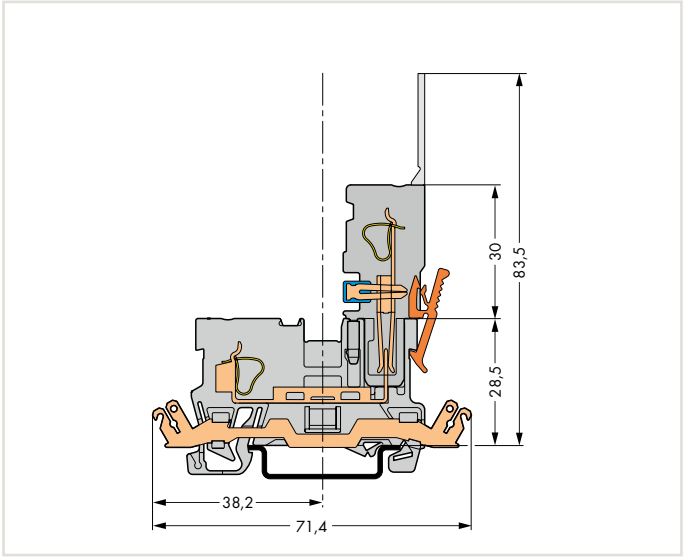

Carrier terminal block with shield contact

6

X-COM®-SYSTEM
2-Pin Carrier Terminal Blocks
4 mm², 769 Series

500 V/6 kV/3 ❶ | 300 V, 20 A I_N 32 A ❷ | 300 V, 20 A **Terminal block width 5 mm / 0.197 inch**	**Terminal block width 5 mm / 0.197 inch**

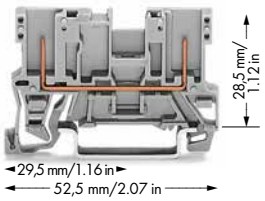

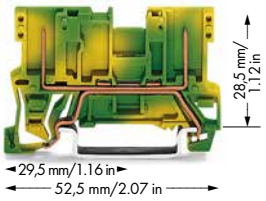

❶ 500 V = rated voltage
6 kV = rated surge voltage
3 = pollution degree
250 V / 4 kV / 3 =
Nominal voltage with shield contact
(see Section 14)

❷ Current-carrying capacity curves, see page 400 and upon request

❸ See application notes for:
Staggered jumper, page 333
Push-in type wire jumper, page 333
Test plug modules, page 327

6

	Item No.	Pack. Unit
2-pin carrier terminal block		
gray	**769-156**	100
2-pin carrier terminal block, with shield contact, (no picture)		
gray	**769-221** ❶	50

	Item No.	Pack. Unit
2-pin ground carrier terminal block		
green-yellow	**769-227**	100

769 Series Accessories

Appropriate marking system:
Mini-WSB/Mini-WSB Inline (see Section 13)

End and intermediate plate, 1.1 mm thick			
	orange	**769-306**	100 (4x25)
	gray	**769-305**	100 (4x25)
Coding pin, for coding female plugs			
	orange	**769-435**	100 (4x25)
Adjacent jumper, insulated, I_N = I_N terminal block			
	gray	**280-402**	200 (8x25)
Alternate jumper, insulated, I_N = I_N terminal block			
	gray	**280-409**	100 (4x25)
Staggered jumper, insulated, Spacing: 5 mm, I_N 24 A ❸			
	from 1 to 2	**780-452**	100 (4x25)
	from 1 to 3	**780-453**	100 (4x25)
	from 1 to 4	**780-454**	100 (4x25)
	from 1 to 5	**780-455**	50 (2x25)
	from 1 to 6	**780-456**	50 (2x25)
	from 1 to 7	**780-457**	50 (2x25)
	from 1 to 8	**780-458**	50 (2x25)
Push-in type wire jumper, insulated, wire size 0.75 mm², I_N 9 A ❸			
	L = 60 mm	**249-125**	10
	L = 110 mm	**249-126**	10
	L = 250 mm	**249-127**	10

Test plug module, snaps together, 5 mm wide ❸			
	gray	**280-418**	100 (4x25)
Spacer module, snaps together, 5 mm wide			
	gray	**280-419**	100 (4x25)
Test plug, with 500 mm cable, 2.3 mm Ø, max. 42 V			
	yellow	**210-137**	50
Test plug adapter, 5 mm wide, for 210-137 Test Plug (2.3 mm Ø), for 1.5 ... 4 mm² terminal blocks			
	gray	**280-404**	100 (4x25)
1-conductor female plug, straight			
	gray	**769-101**	200
1-conductor female plug, angled			
	gray	**769-101/022-000**	200
2-conductor female plug			
	gray	**769-121**	100
Pin cover, with Mini-WSB marker slot			
	gray	**769-438**	100 (4x25)
	orange	**769-439**	100 (4x25)

Accessories

Screwless end stop, for DIN-35 rail, 6 mm wide			
	gray	**249-116**	100 (4x25)
Screwless end stop, for DIN-35 rail, 10 mm wide			
	gray	**249-117**	50 (2x25)
Mini-WSB Quick marking system, white, 10 strips with 10 markers per card, 5 mm wide markers			
	plain	**248-501**	5
Mini-WSB Quick marking system, plain, 10 strips with 10 markers per card, 5 mm wide markers			
	yellow	**248-501/000-002**	
	red	**248-501/000-005**	
	blue	**248-501/000-006**	
	gray	**248-501/000-007**	
	orange	**248-501/000-012**	
	light green	**248-501/000-017**	
	green	**248-501/000-023**	
	violet	**248-501/000-024**	
			5

Overview of certification organizations, see page 654

X-COM®-SYSTEM
2-Pin Carrier Terminal Blocks and 1-/2-Conductor Female Plugs
Types of Assembly



1-conductor female plugs
Carrier terminal blocks can be commoned via 280 and 780 Series Jumpers and tested using a 280 Series Test Plug Adapter.

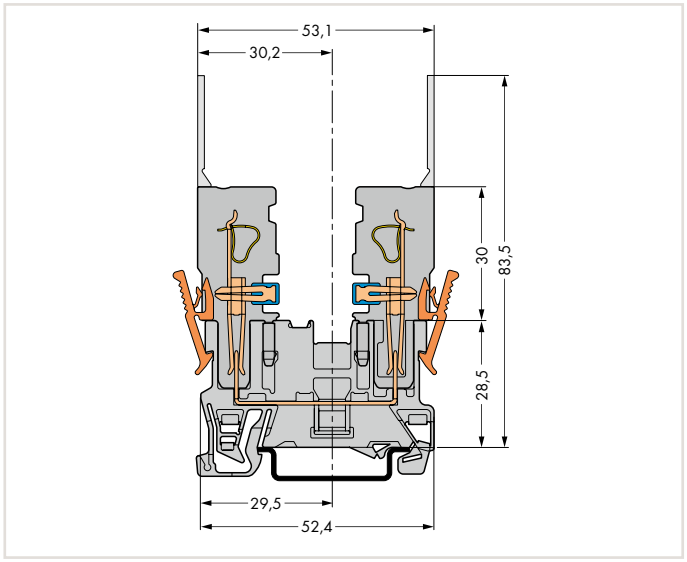

Carrier terminal block



1-conductor and 2-conductor female plugs
Carrier terminal blocks can only be commoned via 280 Series Adjacent and Alternate Jumpers.

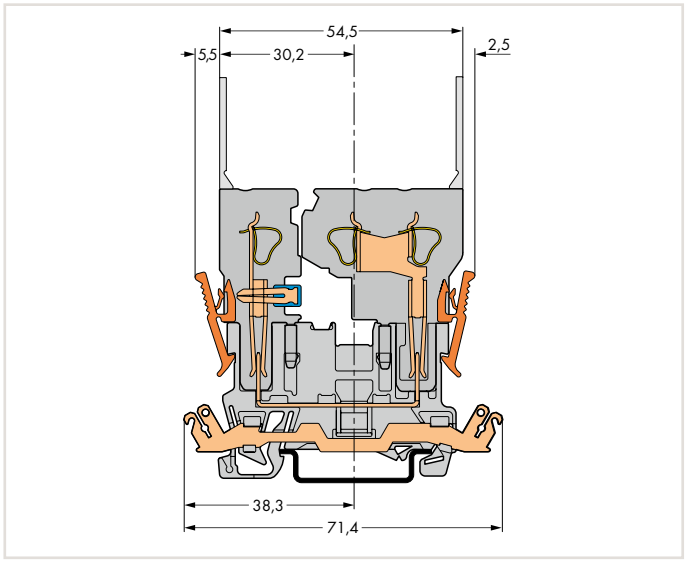

Carrier terminal block with shield contact



2-conductor and 1-conductor female plugs
Carrier terminal blocks can be commoned via 280 and 780 Series Jumpers.

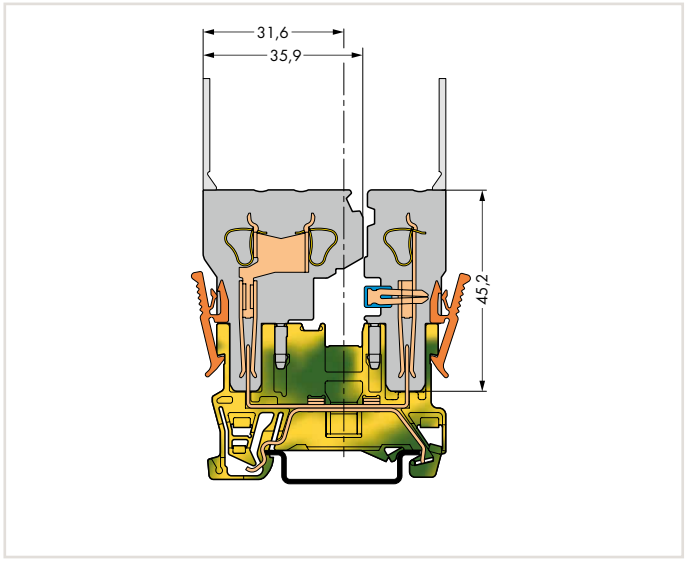

Ground carrier terminal block

CAGE CLAMP®

X-COM®-SYSTEM
2-Conductor/2-Pin Carrier Terminal Blocks
4 mm², 769 Series

0.08 … 4 mm²	28 … 12 AWG
500 V/6 kV/3 ❶	300 V, 20 A
I_N 32 A ❷	300 V, 20 A
Terminal block width 5 mm / 0.197 inch	
8 … 9 mm / 0.31 … 0.35 inch	

0.08 … 4 mm²	28 … 12 AWG
Terminal block width 5 mm / 0.197 inch	
8 … 9 mm / 0.31 … 0.35 inch	

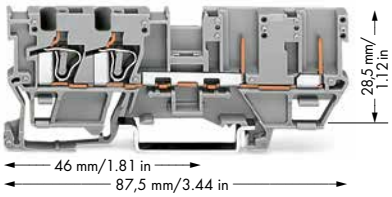

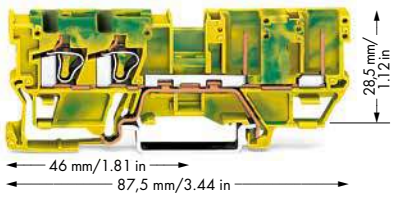

❶ 500 V = rated voltage
6 kV = rated surge voltage
3 = pollution degree
250 V / 4 kV / 3 =
Nominal voltage with shield contact
(see Section 14)

❷ Current-carrying capacity curves, see page 401 and upon request

❸ See application notes for:
Insulation stop, page 331
Staggered jumper, page 333
Push-in type wire jumper, page 333
Test plug modules, page 326

❹ Note:
1-conductor female plug, angled is not suitable.

6

2-conductor/2-pin carrier terminal block

	Item No.	Pack. Unit
gray	769-171	50
blue	769-171/000-006	50

2-conductor/2-pin carrier terminal block, with shield contact, (no picture)

	Item No.	Pack. Unit
gray	769-211 ❶	50

2-conductor/2-pin ground carrier terminal block

	Item No.	Pack. Unit
green-yellow	769-217	50

Item-Specific Accessories

Protective warning marker, with black high-voltage symbol, for 5 terminal blocks



	Item No.	Pack. Unit
yellow	280-415	100 (4x25)

769 Series Accessories

Appropriate marking system:
Mini-WSB/Mini-WSB Inline (see Section 13)

End and intermediate plate, 1.1 mm thick



	Item No.	Pack. Unit
orange	769-304	100 (4x25)
gray	769-303	100 (4x25)

Insulation stop, 5 pcs/strip, 0.08 … 0.2 mm² "s" (0.14 mm² "f-st")

❸



	Item No.	Pack. Unit
white	769-470	200 (8x25)

Insulation stop, 5 pcs/strip, 0.25 … 0.5 mm²

❸



	Item No.	Pack. Unit
light gray	769-471	200 (8x25)

Insulation stop, 5 pcs/strip, 0.75 … 1 mm²

❸



	Item No.	Pack. Unit
dark gray	769-472	200 (8x25)

Coding pin, for coding female plugs



	Item No.	Pack. Unit
orange	769-435	100 (4x25)

Adjacent jumper, insulated, I_N = I_N terminal block



	Item No.	Pack. Unit
gray	280-402	200 (8x25)

Alternate jumper, insulated, I_N = I_N terminal block



	Item No.	Pack. Unit
gray	280-409	100 (4x25)

Staggered jumper, insulated, Spacing: 5 mm, I_N 24 A

❸



	Item No.	Pack. Unit
from 1 to 2	780-452	100 (4x25)
from 1 to 3	780-453	100 (4x25)
from 1 to 4	780-454	100 (4x25)
from 1 to 5	780-455	50 (2x25)
from 1 to 6	780-456	50 (2x25)
from 1 to 7	780-457	50 (2x25)
from 1 to 8	780-458	50 (2x25)

Push-in type wire jumper, insulated, wire size 0.75 mm², I_N 9 A

❸



	Item No.	Pack. Unit
L = 60 mm	249-125	10
L = 110 mm	249-126	10
L = 250 mm	249-127	10

Test plug module, snaps together, 5 mm wide

❸



	Item No.	Pack. Unit
gray	280-418	100 (4x25)

Spacer module, snaps together, 5 mm wide



	Item No.	Pack. Unit
gray	280-419	100 (4x25)

Accessories

Test plug, with 500 mm cable, 2 mm Ø, max. 42 V



	Item No.	Pack. Unit
red	210-136	50

Test plug, with 500 mm cable, 2.3 mm Ø, max. 42 V



	Item No.	Pack. Unit
yellow	210-137	50

Test plug adapter, 5 mm wide, for 210-137 Test Plug (2.3 mm Ø), for 1.5 … 4 mm² terminal blocks

	Item No.	Pack. Unit
gray	280-404	100 (4x25)

Pin cover, with Mini-WSB marker slot



	Item No.	Pack. Unit
gray	769-438	100 (4x25)
orange	769-439	100 (4x25)

1-conductor female plug, straight

❹



	Item No.	Pack. Unit
gray	769-101	200

2-conductor female plug



	Item No.	Pack. Unit
gray	769-121	100

Mini-WSB Quick marking system, white, 10 strips with 10 markers per card, 5 mm wide markers



	Item No.	Pack. Unit
plain	248-501	5

Screwless end stop, for DIN-35 rail, 6 mm wide



	Item No.	Pack. Unit
gray	249-116	100 (4x25)

Screwless end stop, for DIN-35 rail, 10 mm wide



	Item No.	Pack. Unit
gray	249-117	50 (2x25)

CAGE CLAMP®

X-COM®-SYSTEM
2-Conductor/2-Pin Carrier Terminal Blocks and 1-/2-Conductor Female Plugs
Types of Assembly

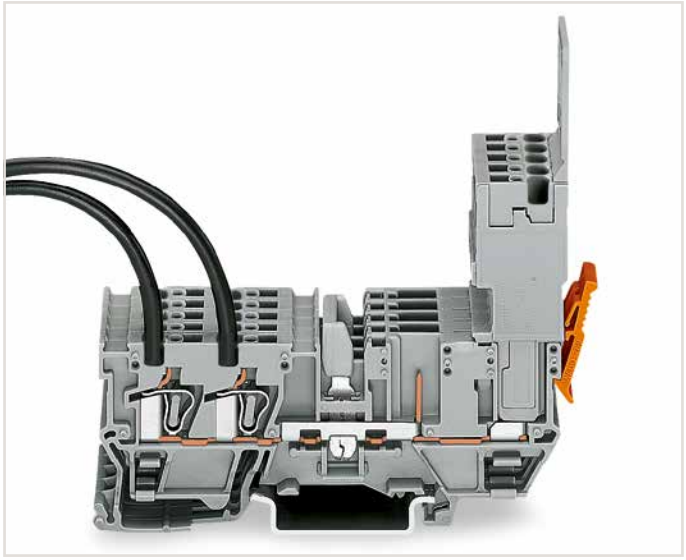

1-conductor female plug
Carrier terminal blocks can be commoned via 280 and 780 Series Jumpers and tested using a 280 Series Test Plug Adapter.

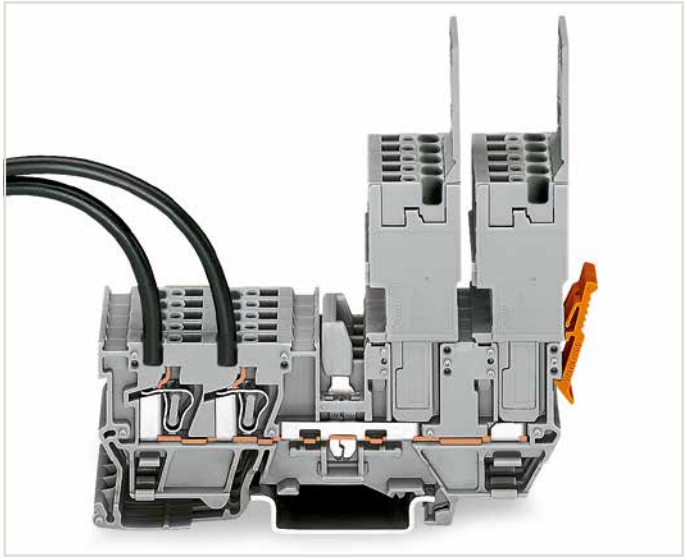

2 x 1-conductor female plugs
Carrier terminal blocks can be commoned via 280 and 780 Series Jumpers and tested using a 280 Series Test Plug Adapter.

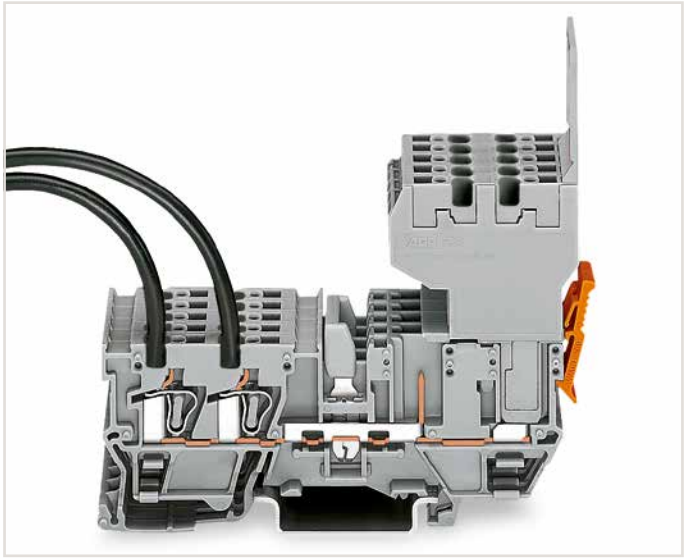

2-conductor female plug
Carrier terminal blocks can be commoned via 280 and 780 Series Jumpers and tested using a 280 Series Test Plug Adapter.

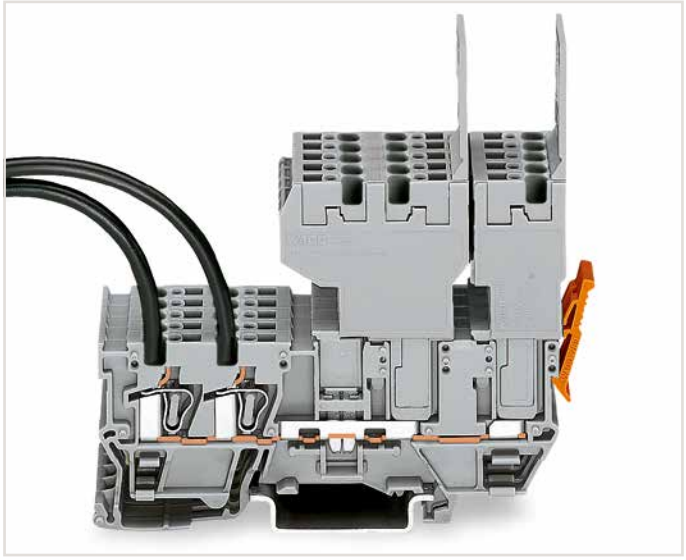

1-conductor and 2-conductor female plugs
Carrier terminal blocks can only be commoned via 280 Series Adjacent and Alternate Jumpers.

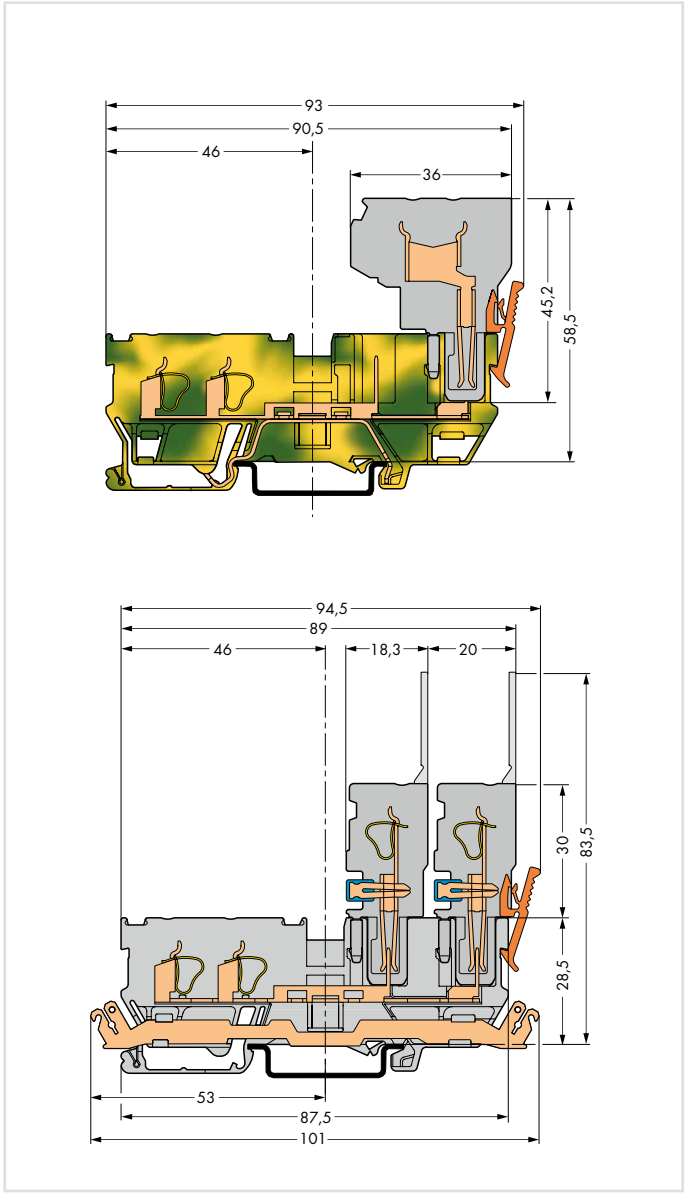

Ground carrier terminal block
Carrier terminal block with shield contact

6

X-COM®-SYSTEM
4-Pin Carrier Terminal Blocks
4 mm², 769 Series

500 V/6 kV/3 ❶ | 300 V, 20 A I_N 32 A ❷ | 300 V, 20 A **Terminal block width 5 mm / 0.197 inch**	**Terminal block width 5 mm / 0.197 inch**

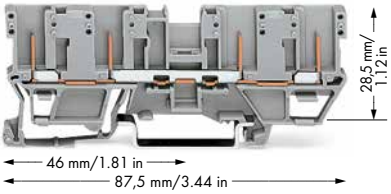

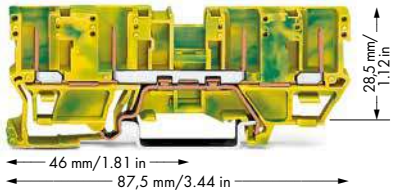

❶ 500 V = rated voltage
6 kV = rated surge voltage
3 = pollution degree
250 V / 4 kV / 3 =
Nominal voltage with shield contact
(see Section 14)

❷ Current-carrying capacity curves, see page 401 and upon request

❸ See application notes for:
Staggered jumper, page 333
Push-in type wire jumper, page 333
Test plug modules, page 327

❹ Note:
1-conductor female plug, angled is not suitable.

6

	Item No.	Pack. Unit
4-pin carrier terminal block		
gray	**769-151**	50
4-pin carrier terminal block, with shield contact, (no picture)		
gray	**769-201** ❶	50

	Item No.	Pack. Unit
4-pin ground carrier terminal block		
green-yellow	**769-207**	50

769 Series Accessories

Appropriate marking system:
Mini-WSB/Mini-WSB Inline (see Section 13)

End and intermediate plate, 1.1 mm thick



orange	**769-302**	100 (4x25)
gray	**769-301**	100 (4x25)

Coding pin, for coding female plugs



orange	**769-435**	100 (4x25)

Adjacent jumper, insulated, I_N = I_N terminal block



gray	**280-402**	200 (8x25)

Alternate jumper, insulated, I_N = I_N terminal block



gray	**280-409**	100 (4x25)

Staggered jumper, insulated, Spacing: 5 mm, I_N 24 A ❸



from 1 to 2	**780-452**	100 (4x25)
from 1 to 3	**780-453**	100 (4x25)
from 1 to 4	**780-454**	100 (4x25)
from 1 to 5	**780-455**	50 (2x25)
from 1 to 6	**780-456**	50 (2x25)
from 1 to 7	**780-457**	50 (2x25)
from 1 to 8	**780-458**	50 (2x25)

Push-in type wire jumper, insulated, wire size 0.75 mm², I_N 9 A ❸



L = 60 mm	**249-125**	10
L = 110 mm	**249-126**	10
L = 250 mm	**249-127**	10

Test plug module, snaps together, 5 mm wide ❸



gray	**280-418**	100 (4x25)

Spacer module, snaps together, 5 mm wide



gray	**280-419**	100 (4x25)

Test plug, with 500 mm cable, 2.3 mm Ø, max. 42 V



yellow	**210-137**	50

Test plug adapter, 5 mm wide, for 210-137 Test Plug (2.3 mm Ø), for 1.5 ... 4 mm² terminal blocks



gray	**280-404**	100 (4x25)

Pin cover, with Mini-WSB marker slot



gray	**769-438**	100 (4x25)
orange	**769-439**	100 (4x25)

1-conductor female plug, straight ❹



gray	**769-101**	200

2-conductor female plug



gray	**769-121**	100

Accessories

Mini-WSB Quick marking system, white, 10 strips with 10 markers per card, 5 mm wide markers



plain	**248-501**	5

Mini-WSB Quick marking system, plain, 10 strips with 10 markers per card, 5 mm wide markers



yellow	**248-501/000-002**	
red	**248-501/000-005**	
blue	**248-501/000-006**	
gray	**248-501/000-007**	
orange	**248-501/000-012**	
light green	**248-501/000-017**	
green	**248-501/000-023**	
violet	**248-501/000-024**	
		5

Screwless end stop, for DIN-35 rail, 6 mm wide



gray	**249-116**	100 (4x25)

Screwless end stop, for DIN-35 rail, 10 mm wide



gray	**249-117**	50 (2x25)

Overview of certification organizations, see page 654

X-COM®-SYSTEM
4-Pin Carrier Terminal Blocks and 1-/2-Conductor Female Plugs
Types of Assembly



4 x 1-conductor female plugs
Carrier terminal blocks can be commoned via 280 and 780 Series Jumpers and tested using a 280 Series Test Plug Adapter.



2 x 2-conductor female plugs
Carrier terminal blocks can be commoned via 280 and 780 Series Jumpers and tested using a 280 Series Test Plug Adapter.

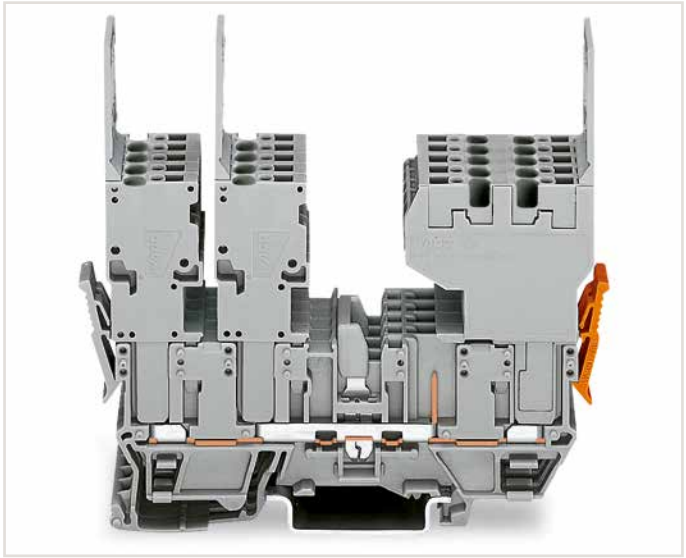

2 x 1-conductor female plug (left), 1 x 2-conductor female plug (right), may be reversed – carrier terminal blocks can be commoned via 280 and 780 Series Jumpers and tested using a 280 Series Test Plug Adapter.



1-conductor and 2-conductor female plugs (left), 2-conductor female plug (right), may be reversed – carrier terminal blocks can only be commoned via 280 Series Adjacent and Alternate Jumpers.

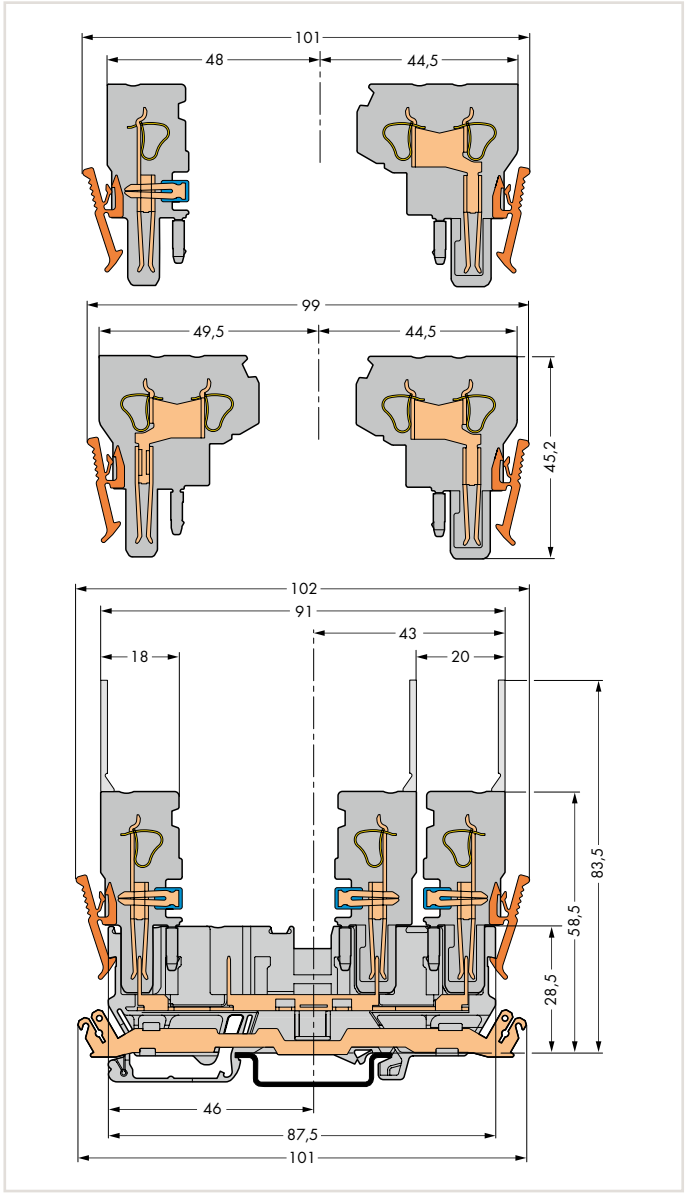

Carrier terminal block with shield contact

6

CAGE CLAMP®

X-COM®-SYSTEM
2-Conductor/1-Pin Carrier Terminal Blocks
4 mm², 769 Series

0.08 … 4 mm²	28 … 12 AWG
500 V/6 kV/3 ❶	300 V, 20 A
I_N 32 A ❷	300 V, 20 A
Terminal block width 5 mm / 0.197 inch	
8 … 9 mm / 0.31 … 0.35 inch	

0.08 … 4 mm²	28 … 12 AWG
Terminal block width 5 mm / 0.197 inch	
8 … 9 mm / 0.31 … 0.35 inch	

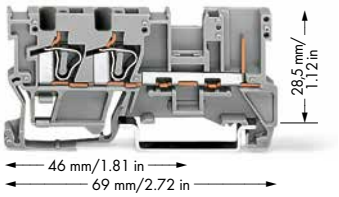

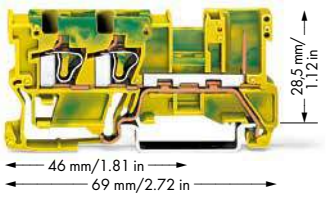

❶ 500 V = rated voltage
6 kV = rated surge voltage
3 = pollution degree
(see Section 14)

❷ Current-carrying capacity curves upon request

❸ See application notes for:
Insulation stop, page 331
Staggered jumper, page 333
Push-in type wire jumper, page 333
Test plug modules, page 326

6

2-conductor/1-pin carrier terminal block

	Item No.	Pack. Unit
gray	769-251	50
blue	769-251/000-006	50

Item-Specific Accessories

Protective warning marker, with black high-voltage symbol, for 5 terminal blocks



	Item No.	Pack. Unit
yellow	280-415	100 (4x25)

769 Series Accessories

Appropriate marking system:
Mini-WSB/Mini-WSB Inline (see Section 13)

End and intermediate plate, 1.1 mm thick



	Item No.	Pack. Unit
orange	769-321	100 (4x25)
gray	769-320	100 (4x25)

Insulation stop, 5 pcs/strip, 0.08 … 0.2 mm² "s" (0.14 mm² "f-st") ❸



	Item No.	Pack. Unit
white	769-470	200 (8x25)

Insulation stop, 5 pcs/strip, 0.25 … 0.5 mm² ❸



	Item No.	Pack. Unit
light gray	769-471	200 (8x25)

Insulation stop, 5 pcs/strip, 0.75 … 1 mm² ❸



	Item No.	Pack. Unit
dark gray	769-472	200 (8x25)

Coding pin, for coding female plugs



	Item No.	Pack. Unit
orange	769-435	100 (4x25)

Adjacent jumper, insulated, I_N = I_N terminal block



	Item No.	Pack. Unit
gray	280-402	200 (8x25)

Alternate jumper, insulated, I_N = I_N terminal block ❸



	Item No.	Pack. Unit
gray	280-409	100 (4x25)

Push-in type wire jumper, insulated, wire size 0.75 mm², I_N 9 A



	Item No.	Pack. Unit
L = 60 mm	249-125	10
L = 110 mm	249-126	10
L = 250 mm	249-127	10

2-conductor/1-pin ground carrier terminal block

	Item No.	Pack. Unit
green-yellow	769-257	50

Staggered jumper, insulated, Spacing: 5 mm, I_N 24 A ❸



	Item No.	Pack. Unit
from 1 to 2	780-452	100 (4x25)
from 1 to 3	780-453	100 (4x25)
from 1 to 4	780-454	100 (4x25)
from 1 to 5	780-455	50 (2x25)
from 1 to 6	780-456	50 (2x25)
from 1 to 7	780-457	50 (2x25)
from 1 to 8	780-458	50 (2x25)

Test plug module, snaps together, 5 mm wide ❸



	Item No.	Pack. Unit
gray	280-418	100 (4x25)

Spacer module, snaps together, 5 mm wide



	Item No.	Pack. Unit
gray	280-419	100 (4x25)

B-type test plug module, snaps together, 5 mm wide ❸



	Item No.	Pack. Unit
gray	249-106	100 (4x25)

Test plug, with 500 mm cable, 2 mm Ø, max. 42 V



	Item No.	Pack. Unit
red	210-136	50

Test plug, with 500 mm cable, 2.3 mm Ø, max. 42 V



	Item No.	Pack. Unit
yellow	210-137	50

Test plug adapter, 5 mm wide, for 210-137 Test Plug (2.3 mm Ø), for 1.5 … 4 mm² terminal blocks



	Item No.	Pack. Unit
gray	280-404	100 (4x25)

Accessories

Pin cover, with Mini-WSB marker slot



gray	769-438	100 (4x25)
orange	769-439	100 (4x25)

1-conductor female plug, straight



gray	769-101	200

1-conductor female plug, angled



gray	769-101/022-000	200

2-conductor female plug



gray	769-121	100

Mini-WSB Quick marking system, white, 10 strips with 10 markers per card, 5 mm wide markers



plain	248-501	5

Mini-WSB Quick marking system, plain, 10 strips with 10 markers per card, 5 mm wide markers



yellow	248-501/000-002	
red	248-501/000-005	
blue	248-501/000-006	
gray	248-501/000-007	
orange	248-501/000-012	
light green	248-501/000-017	
green	248-501/000-023	
violet	248-501/000-024	
		5

Overview of certification organizations, see page 654

CAGE CLAMP®

X-COM®-SYSTEM
2-Conductor/1-Pin Carrier Terminal Blocks and 1-/2-Conductor Female Plugs
Types of Assembly

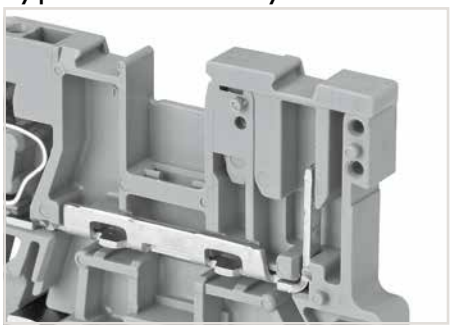

Pin cover (769-438) with Mini-WSB marker slot



1-conductor female plug
Carrier terminal blocks can be commoned via 280 and 780 Series Jumpers and tested using a 280 Series Test Plug Adapter.

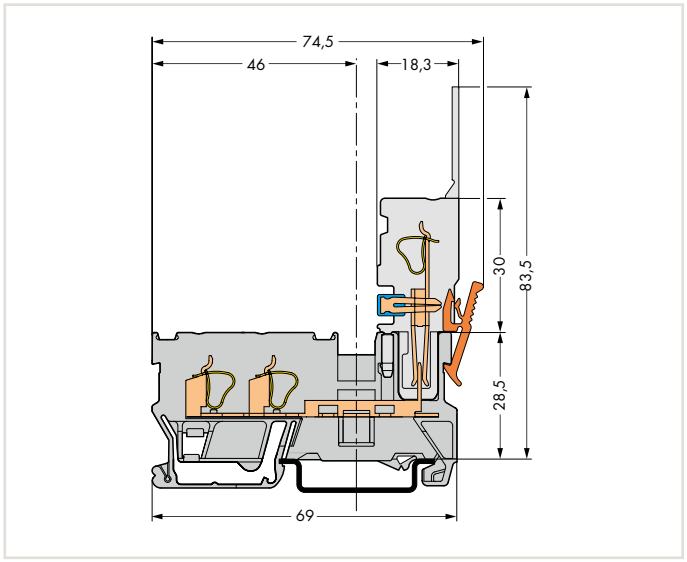

Carrier terminal block

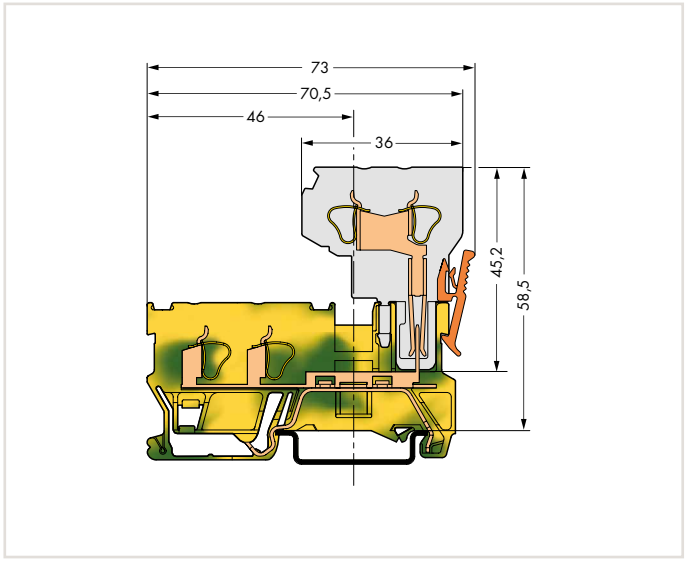

Ground carrier terminal block

6

CAGE CLAMP®

X-COM®-SYSTEM
1-Conductor/1-Pin Carrier Terminal Blocks with Three Jumper Positions
4 mm², 769 Series

0.08 … 4 mm²	28 … 12 AWG
500 V/6 kV/3 ❶	300 V, 20 A
I_N 32 A ❷	300 V, 20 A

Terminal block width 5 mm / 0.197 inch
8 … 9 mm / 0.31 … 0.35 inch

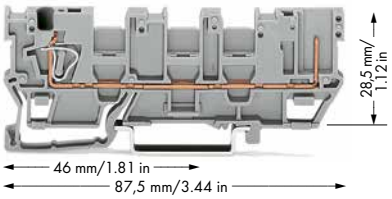

❶ 500 V = rated voltage
6 kV = rated surge voltage
3 = pollution degree
(see Section 14)

❷ Current-carrying capacity curves upon request

❸ See application notes for:
Insulation stop, page 331

6

Item No.		Pack. Unit
1-conductor/1-pin carrier terminal block, with three jumper positions		
gray	**769-214**	50
Full range of 769 Series accessories, see page 342		

769 Series Accessories

End and intermediate plate, 1.1 mm thick		
orange	**769-316**	100 (4x25)
gray	**769-315**	100 (4x25)
Insulation stop, 5 pcs/strip, 0.08 … 0.2 mm² "s" (0.14 mm² "f-st") ❸		
white	**769-470**	200 (8x25)

Accessories

Appropriate marking system:
Mini-WSB/Mini-WSB Inline (see Section 13)

Insulation stop, 5 pcs/strip, 0.25 … 0.5 mm² ❸		
light gray	**769-471**	200 (8x25)
Insulation stop, 5 pcs/strip, 0.75 … 1 mm² ❸		
dark gray	**769-472**	200 (8x25)
Adjacent jumper, insulated, I_N = I_N terminal block		
gray	**280-402**	200 (8x25)
Alternate jumper, insulated, I_N = I_N terminal block		
gray	**280-409**	100 (4x25)

Coding pin, for coding female plugs		
orange	**769-435**	100 (4x25)
1-conductor female plug, straight		
gray	**769-101**	200
1-conductor female plug, angled		
gray	**769-101/022-000**	200
2-conductor female plug		
gray	**769-121**	100

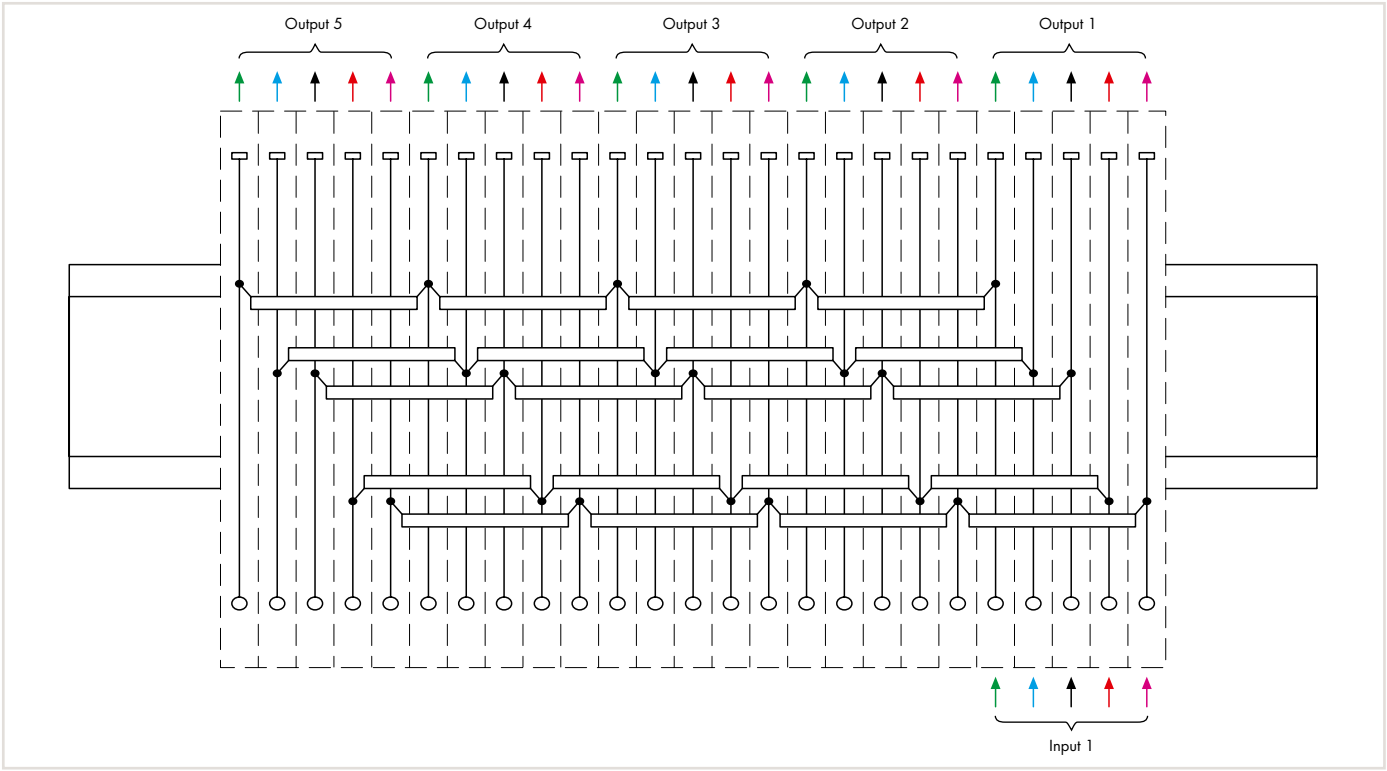

Overview of certification organizations, see page 654

CAGE CLAMP®

X-COM®-SYSTEM
2-Pin Carrier Terminal Blocks and 1-/2-Conductor Female Plugs
Types of Assembly

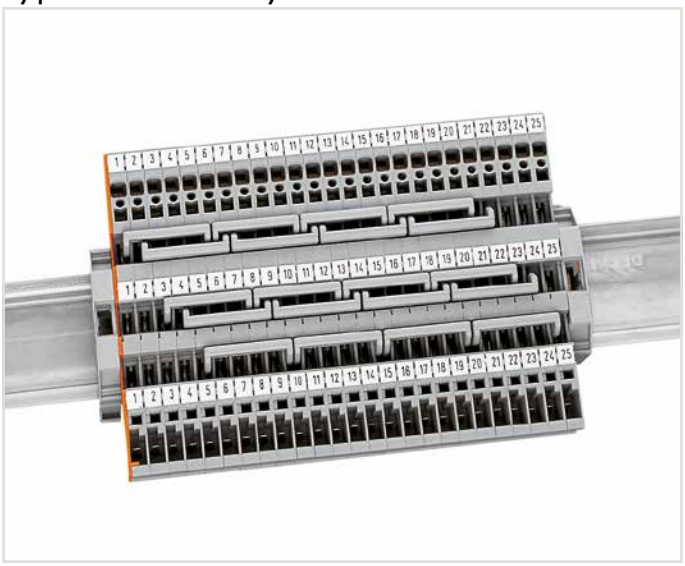

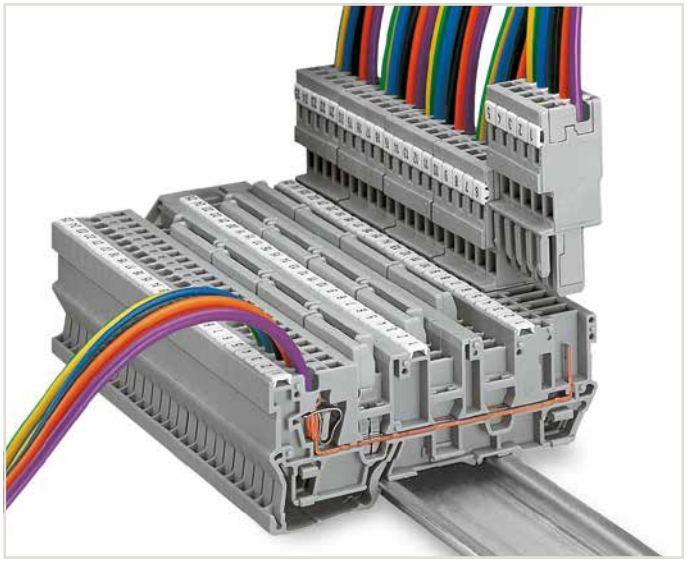

1-conductor/1-pin carrier terminal blocks with three jumper positions
The three jumper positions allow up to six commoning options for staggered jumpers.

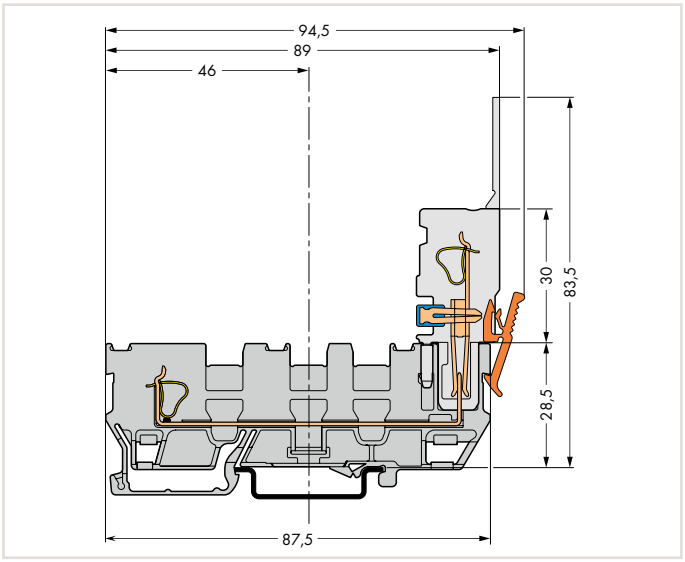

Carrier terminal block

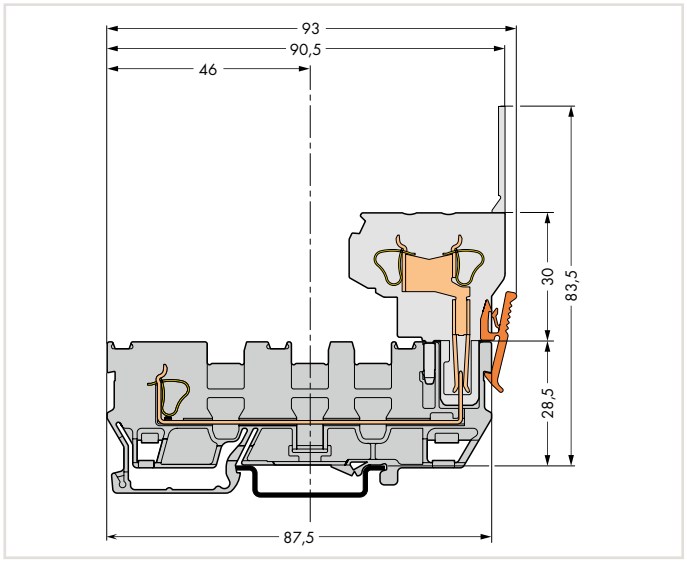

Carrier terminal block

Application examples:
- Muliplication of three-phase circuits L1-L2-L3-N-PE with pluggable outputs; e.g., use with motors, frequency converters, power units.
- Voltage supplies to multiple locations
  ± 15 V, 0 V, + 5 V, + 12 V, + 24 V
- Various wire-to-wire interfacing possibilities

CAGE CLAMP®

X-COM®-SYSTEM
1-Conductor/1-Pin and 2-Pin Disconnect Carrier Terminal Blocks
4 mm², 769 Series

0.08 ... 4 mm²	**28 ... 12 AWG**
400 V/6 kV/3 ❶	**300 V, 20 A**
I_N 16 A ❷	**300 V, 20 A**
Terminal block width 5 mm / 0.197 inch	
8 ... 9 mm / 0.31 ... 0.35 inch	

400 V/6 kV/3 ❶	**300 V, 20 A**
I_N 16 A ❷	**300 V, 20 A**
Terminal block width 5 mm / 0.197 inch	

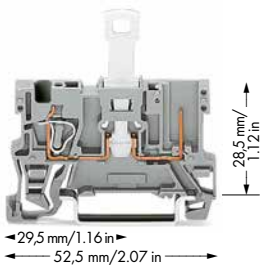

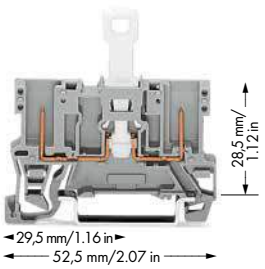

❶ 400 V = rated voltage
6 kV = rated surge voltage
3 = pollution degree
250 V / 4 kV / 3 =
ominal voltage with shield contact
(see Section 14)

❷ 16 A, 85 °C upper temperature limit (current-carrying capacity curves upon request)

❸ See application notes for:
Insulation stop, page 331

❹ Note:
2-conductor female plug is not suitable.

6

	Item No.	Pack. Unit
1-conductor/1-pin disconnect carrier terminal block		
gray	**769-232**	50
1-conductor/1-pin disconnect carrier terminal block, with shield contact, (no picture)		
gray	**769-233** ❶	50

Item-Specific Accessories

End and intermediate plate, 1.1 mm thick			
	orange	**769-308**	100 (4x25)
	gray	**769-307**	100 (4x25)
❸ Insulation stop, 5 pcs/strip, 0.08 ... 0.2 mm² "s" (0.14 mm² "f-st")			
	white	**769-470**	200 (8x25)
❸ Insulation stop, 5 pcs/strip, 0.25 ... 0.5 mm²			
	light gray	**769-471**	200 (8x25)
❸ Insulation stop, 5 pcs/strip, 0.75 ... 1 mm²			
	dark gray	**769-472**	200 (8x25)
Protective warning marker, with black high-voltage symbol, for 5 terminal blocks			
	yellow	**280-415**	100 (4x25)
Test plug, with 500 mm cable, 2 mm Ø, max. 42 V			
	red	**210-136**	50

769 Series Accessories

Appropriate marking system:
Mini-WSB/Mini-WSB Inline (see Section 13)

Coding pin, for coding female plugs			
	orange	**769-435**	100 (4x25)
Test plug, with 500 mm cable, 2.3 mm Ø, max. 42 V			
	yellow	**210-137**	50
Disconnect lock, for disconnect tab used on disconnect terminal blocks (280/281 and 769 Series)			
	red	**709-170**	200 (8x25)

	Item No.	Pack. Unit
2-pin disconnect carrier terminal block		
gray	**769-222**	50
2-pin disconnect carrier terminal block, with shield contact, (no picture)		
gray	**769-223** ❶	50

Item-Specific Accessories

End and intermediate plate, 1.1 mm thick			
	orange	**769-306**	100 (4x25)
	gray	**769-305**	100 (4x25)
❹ 1-conductor female plug, straight			
	gray	**769-101**	200
1-conductor female plug, angled			
	gray	**769-101/022-000**	200
Mini-WSB Quick marking system, white, 10 strips with 10 markers per card, 5 mm wide markers			
	plain	**248-501**	5

Accessories

Mini-WSB Quick marking system, plain, 10 strips with 10 markers per card, 5 mm wide markers			
	yellow	**248-501/000-002**	
	red	**248-501/000-005**	
	blue	**248-501/000-006**	
	gray	**248-501/000-007**	
	orange	**248-501/000-012**	
	light green	**248-501/000-017**	
	green	**248-501/000-023**	
	violet	**248-501/000-024**	
			5
Screwless end stop, for DIN-35 rail, 6 mm wide			
	gray	**249-116**	100 (4x25)
Screwless end stop, for DIN-35 rail, 10 mm wide			
	gray	**249-117**	50 (2x25)

Overview of certification organizations, see page 654

CAGE CLAMP®

X-COM®-SYSTEM – 1-Conductor/1-Pin and 2-Pin Disconnect Carrier Terminal Blocks with Two Jumper Positions

4 mm², 769 Series

0.08 ... 4 mm² | **28 ... 12 AWG**	
400 V/6 kV/3 ❶ | **300 V, 20 A**	**400 V/6 kV/3 ❶** | **300 V, 20 A**
I_N 16 A ❷ | **300 V, 20 A**	**I_N 16 A ❷** | **300 V, 20 A**
Terminal block width 5 mm / 0.197 inch	**Terminal block width 5 mm / 0.197 inch**
8 ... 9 mm / 0.31 ... 0.35 inch	

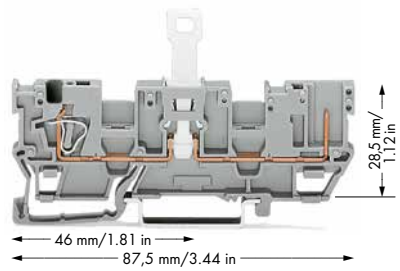

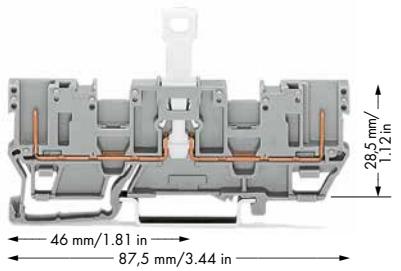

❶ 400 V = rated voltage
6 kV = rated surge voltage
3 = pollution degree
250 V / 4 kV / 3 =
ominal voltage with shield contact
(see Section 14)

❷ 16 A, 85 °C upper temperature limit (current-carrying capacity curves upon request)

❸ See application notes for:
Insulation stop, page 331
Staggered jumper, page 333
Push-in type wire jumper, page 333
Test plug module, page 328

	Item No.	Pack. Unit
1-conductor/1-pin disconnect carrier terminal block, with two jumper positions		
gray	**769-212**	50
1-conductor/1-pin disconnect carrier terminal block, with shield contact, with two jumper positions, (no picture)		
gray	**769-213** ❶	50

Item-Specific Accessories

End and intermediate plate, 1.1 mm thick			
	orange	**769-312**	100 (4x25)
	gray	**769-311**	100 (4x25)
Separator, oversized, 1.1 mm thick			
	orange	**769-314**	100 (4x25)
Insulation stop, 5 pcs/strip, 0.08 ... 0.2 mm² "s" (0.14 mm² "f-st") ❸			
	white	**769-470**	200 (8x25)
Insulation stop, 5 pcs/strip, 0.25 ... 0.5 mm² ❸			
	light gray	**769-471**	200 (8x25)
Insulation stop, 5 pcs/strip, 0.75 ... 1 mm² ❸			
	dark gray	**769-472**	200 (8x25)
Protective warning marker, with black high-voltage symbol, for 5 terminal blocks			
	yellow	**280-415**	100 (4x25)
Test plug, with 500 mm cable, 2 mm Ø, max. 42 V			
	red	**210-136**	50

769 Series Accessories

Appropriate marking system:
Mini-WSB/Mini-WSB Inline (see Section 13)

Coding pin, for coding female plugs			
	orange	**769-435**	100 (4x25)

	Item No.	Pack. Unit
2-pin disconnect carrier terminal block, with two jumper positions		
gray	**769-202**	50
2-pin disconnect carrier terminal block, with shield contact, with two jumper positions, (no picture)		
gray	**769-203** ❶	50

Item-Specific Accessories

End and intermediate plate, 1.1 mm thick			
	orange	**769-310**	100 (4x25)
	gray	**769-309**	100 (4x25)
Separator, oversized, 1.1 mm thick			
	orange	**769-313**	100 (4x25)
Test plug, with 500 mm cable, 2.3 mm Ø, max. 42 V			
	yellow	**210-137**	50

Accessories

Adjacent jumper, insulated, I_N = I_N terminal block			
	gray	**280-402**	200 (8x25)
Alternate jumper, insulated, I_N = I_N terminal block			
	gray	**280-409**	100 (4x25)
Staggered jumper, insulated, Spacing: 5 mm, I_N 24 A ❸			
	from 1 to 2	**780-452**	100 (4x25)
	from 1 to 3	**780-453**	100 (4x25)
	from 1 to 4	**780-454**	100 (4x25)
	from 1 to 5	**780-455**	50 (2x25)
	from 1 to 6	**780-456**	50 (2x25)
	from 1 to 7	**780-457**	50 (2x25)
	from 1 to 8	**780-458**	50 (2x25)
Push-in type wire jumper, insulated, wire size 0.75 mm², I_N 9 A ❸			
	L = 60 mm	**249-125**	10
	L = 110 mm	**249-126**	10
	L = 250 mm	**249-127**	10
Test plug module, snaps together, 5 mm wide ❸			
	gray	**280-418**	100 (4x25)
Disconnect lock, for disconnect tab used on disconnect terminal blocks (280/281 and 769 Series)			
	red	**709-170**	200 (8x25)
1-conductor female plug, straight			
	gray	**769-101**	200
1-conductor female plug, angled			
	gray	**769-101/022-000**	200
2-conductor female plug			
	gray	**769-121**	100

6

CAGE CLAMP®

X-COM®-SYSTEM
1-Conductor/1-Pin and 2-Pin Diode Carrier Terminal Blocks
4 mm², 769 Series

0.08 ... 4 mm² | 28 ... 12 AWG **U_N 250 V, U_{RM} 1000 V** **1N4007 - 0.5 A continuous current** **Terminal block width 5 mm / 0.197 inch** **8 ... 9 mm / 0.31 ... 0.35 inch**	**U_N 250 V, U_{RM} 1000 V** **1N4007 - 0.5 A continuous current** **Terminal block width 5 mm / 0.197 inch**

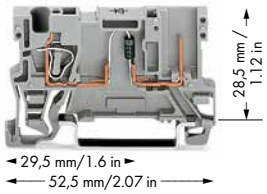

769-238/281-411 769-238/281-410

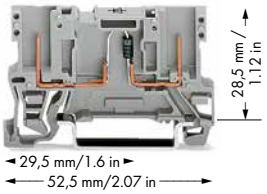

769-228/281-411 769-228/281-410

❶ See application notes for: Insulation stop, page 331

❷ Note: 2-conductor female plug is not suitable.

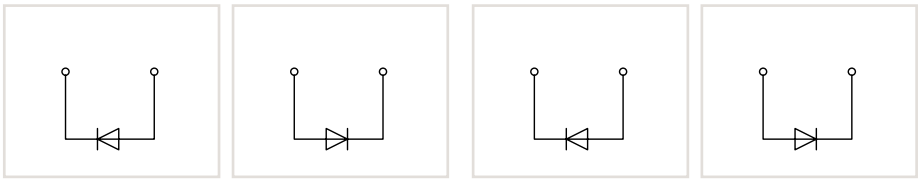

6

Item No.		Pack. Unit
1-conductor/1-pin diode carrier terminal block		
Anode right	**769-238/281-411**	100
Anode left	**769-238/281-410**	100
2-pin diode carrier terminal block		
Anode right	**769-228/281-411**	100
Anode left	**769-228/281-410**	100

Item-Specific Accessories

End and intermediate plate, 1.1 mm thick



orange	**769-308**	100 (4x25)
gray	**769-307**	100 (4x25)



orange	**769-306**	100 (4x25)
gray	**769-305**	100 (4x25)

Insulation stop, 5 pcs/strip, 0.08 ... 0.2 mm² "s" (0.14 mm² "f-st") ❶



white	**769-470**	200 (8x25)

Insulation stop, 5 pcs/strip, 0.25 ... 0.5 mm² ❶



light gray	**769-471**	200 (8x25)

Insulation stop, 5 pcs/strip, 0.75 ... 1 mm² ❶



dark gray	**769-472**	200 (8x25)

Protective warning marker, with black high-voltage symbol, for 5 terminal blocks



yellow	**280-415**	100 (4x25)

Test plug, with 500 mm cable, 2 mm Ø, max. 42 V



red	**210-136**	50

769 Series Accessories

Appropriate marking system:
Mini-WSB/Mini-WSB Inline (see Section 13)

Coding pin, for coding female plugs



orange	**769-435**	100 (4x25)

Test plug, with 500 mm cable, 2.3 mm Ø, max. 42 V



yellow	**210-137**	50

1-conductor female plug, straight ❷



gray	**769-101**	200

1-conductor female plug, angled



gray	**769-101/022-000**	200

Accessories

Mini-WSB Quick marking system, white, 10 strips with 10 markers per card, 5 mm wide markers



plain	**248-501**	5

Mini-WSB Quick marking system, plain, 10 strips with 10 markers per card, 5 mm wide markers



yellow	**248-501/000-002**	
red	**248-501/000-005**	
blue	**248-501/000-006**	
gray	**248-501/000-007**	
orange	**248-501/000-012**	
light green	**248-501/000-017**	
green	**248-501/000-023**	
violet	**248-501/000-024**	
		5

Screwless end stop, for DIN-35 rail, 6 mm wide



gray	**249-116**	100 (4x25)

Screwless end stop, for DIN-35 rail, 10 mm wide



gray	**249-117**	50 (2x25)

CAGE CLAMP®

X-COM®-SYSTEM – 1-Conductor/1-Pin and 2-Pin Diode Carrier Terminal Blocks with Two Jumper Positions

4 mm², 769 Series

0.08 ... 4 mm² | 28 ... 12 AWG
U_N 250 V, U_{RM} 1000 V
1N4007 - 0.5 A continuous current
Terminal block width 5 mm / 0.197 inch
8 ... 9 mm / 0.31 ... 0.35 inch

U_N 250 V, U_{RM} 1000 V
1N4007 - 0.5 A continuous current
Terminal block width 5 mm / 0.197 inch

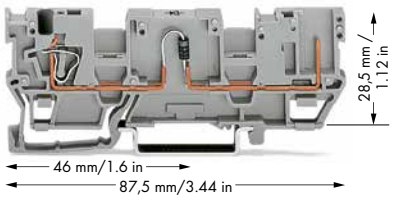

769-218/281-411 769-218/281-410

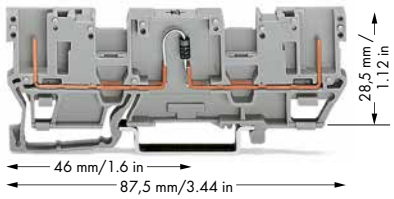

769-208/281-411 769-208/281-410

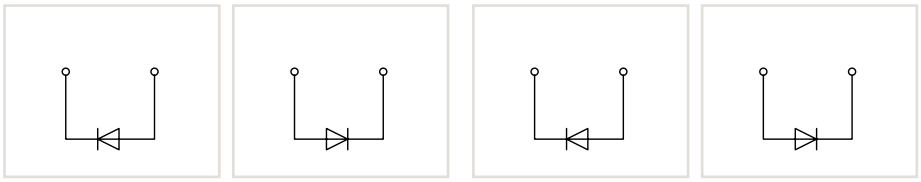

❶ See application notes for:
Insulation stop, page 331
Staggered jumper, page 333
Push-in type wire jumper, page 333
Test plug module, page 328

	Item No.	Pack. Unit
1-conductor/1-pin diode carrier terminal block, with two jumper positions		
Anode right	**769-218/281-411**	50
Anode left	**769-218/281-410**	50

	Item No.	Pack. Unit
2-pin diode carrier terminal block, with two jumper positions		
Anode right	**769-208/281-411**	50
Anode left	**769-208/281-410**	50

Item-Specific Accessories

End and intermediate plate, 1.1 mm thick
orange **769-312** 100 (4x25)
gray **769-311** 100 (4x25)

Separator, oversized, 1.1 mm thick
orange **769-314** 100 (4x25)

Insulation stop, 5 pcs/strip, 0.08 ... 0.2 mm² "s" (0.14 mm² "f-st") ❶
white **769-470** 200 (8x25)

Insulation stop, 5 pcs/strip, 0.25 ... 0.5 mm² ❶
light gray **769-471** 200 (8x25)

Insulation stop, 5 pcs/strip, 0.75 ... 1 mm² ❶
dark gray **769-472** 200 (8x25)

Protective warning marker, with black high-voltage symbol, for 5 terminal blocks
yellow **280-415** 100 (4x25)

Test plug, with 500 mm cable, 2 mm Ø, max. 42 V
red **210-136** 50

Item-Specific Accessories

End and intermediate plate, 1.1 mm thick
orange **769-310** 100 (4x25)
gray **769-309** 100 (4x25)

Separator, oversized, 1.1 mm thick
orange **769-313** 100 (4x25)

769 Series Accessories

Appropriate marking system:
Mini-WSB/Mini-WSB Inline (see Section 13)

Coding pin, for coding female plugs
orange **769-435** 100 (4x25)

Test plug, with 500 mm cable, 2.3 mm Ø, max. 42 V
yellow **210-137** 50

Adjacent jumper, insulated, I_N = I_N terminal block
gray **280-402** 200 (8x25)

Staggered jumper, insulated, Spacing: 5 mm, I_N 24 A ❶
from 1 to 2 **780-452** 100 (4x25)
from 1 to 3 **780-453** 100 (4x25)
from 1 to 4 **780-454** 100 (4x25)
from 1 to 5 **780-455** 50 (2x25)
from 1 to 6 **780-456** 50 (2x25)
from 1 to 7 **780-457** 50 (2x25)
from 1 to 8 **780-458** 50 (2x25)

Push-in type wire jumper, insulated, wire size 0.75 mm², I_N 9 A ❶
L = 60 mm **249-125** 10
L = 110 mm **249-126** 10
L = 250 mm **249-127** 10

Test plug module, snaps together, 5 mm wide ❶
gray **280-418** 100 (4x25)

1-conductor female plug, straight
gray **769-101** 200

1-conductor female plug, angled
gray **769-101/022-000** 200

2-conductor female plug
gray **769-121** 100

6

CAGE CLAMP®

X-COM®-SYSTEM
1-Conductor/1-Pin and 2-Pin LED Carrier Terminal Blocks
4 mm², 769 Series

0.08 ... 4 mm² | 28 ... 12 AWG **24 VDC** **I_F 0.025 A max.** **Terminal block width 5 mm / 0.197 inch** **8 ... 9 mm / 0.31 ... 0.35 inch**	**24 VDC** **I_F 0.025 A max.** **Terminal block width 5 mm / 0.197 inch**

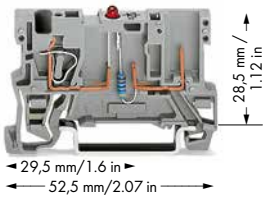

769-239/281-413 769-239/281-434

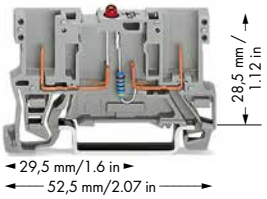

769-229/281-413 769-229/281-434

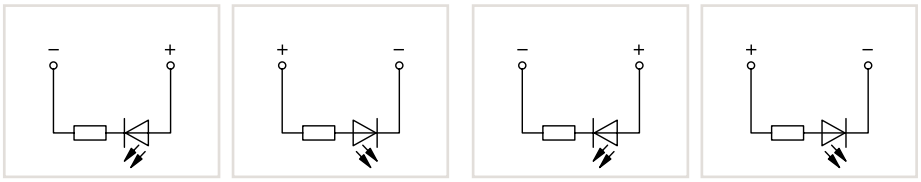

❶ See application notes for:
Insulation stop, page 331

❷ Note:
2-conductor female plug is not suitable.

6

Item No.		Pack. Unit
1-conductor/1-pin LED carrier terminal block		
◯ Anode right	**769-239/281-413**	100
◯ Anode left	**769-239/281-434**	100

Item-Specific Accessories

End and intermediate plate, 1.1 mm thick			
	orange	**769-308**	100 (4x25)
	gray	**769-307**	100 (4x25)
Insulation stop, 5 pcs/strip, 0.08 ... 0.2 mm² "s" (0.14 mm² "f-st") ❶			
	white	**769-470**	200 (8x25)
Insulation stop, 5 pcs/strip, 0.25 ... 0.5 mm² ❶			
	light gray	**769-471**	200 (8x25)
Insulation stop, 5 pcs/strip, 0.75 ... 1 mm² ❶			
	dark gray	**769-472**	200 (8x25)
Protective warning marker, with black high-voltage symbol, for 5 terminal blocks			
	yellow	**280-415**	100 (4x25)
Test plug, with 500 mm cable, 2 mm Ø, max. 42 V			
	red	**210-136**	50

769 Series Accessories

Appropriate marking system:
Mini-WSB/Mini-WSB Inline (see Section 13)

Coding pin, for coding female plugs			
	orange	**769-435**	100 (4x25)
Test plug, with 500 mm cable, 2.3 mm Ø, max. 42 V			
	yellow	**210-137**	50

Item No.		Pack. Unit
2-pin LED carrier terminal block		
◯ Anode right	**769-229/281-413**	100
◯ Anode left	**769-229/281-434**	100

Item-Specific Accessories

End and intermediate plate, 1.1 mm thick			
	orange	**769-306**	100 (4x25)
	gray	**769-305**	100 (4x25)
1-conductor female plug, straight ❷			
	gray	**769-101**	200
1-conductor female plug, angled			
	gray	**769-101/022-000**	200

Accessories

Mini-WSB Quick marking system, white, 10 strips with 10 markers per card, 5 mm wide markers			
	plain	**248-501**	5
Mini-WSB Quick marking system, plain, 10 strips with 10 markers per card, 5 mm wide markers			
	yellow	**248-501/000-002**	
	red	**248-501/000-005**	
	blue	**248-501/000-006**	
	gray	**248-501/000-007**	
	orange	**248-501/000-012**	
	light green	**248-501/000-017**	
	green	**248-501/000-023**	
	violet	**248-501/000-024**	
			5
Screwless end stop, for DIN-35 rail, 6 mm wide			
	gray	**249-116**	100 (4x25)
Screwless end stop, for DIN-35 rail, 10 mm wide			
	gray	**249-117**	50 (2x25)

Overview of certification organizations, see page 654

CAGE CLAMP®

X-COM®-SYSTEM – 1-Conductor/1-Pin and 2-Pin LED Carrier Terminal Blocks with Two Jumper Positions

4 mm², 769 Series

0.08 ... 4 mm² | 28 ... 12 AWG **24 VDC** **I_F 0.025 A max.** **Terminal block width 5 mm / 0.197 inch** **8 ... 9 mm / 0.31 ... 0.35 inch**	**24 VDC** **I_F 0.025 A max.** **Terminal block width 5 mm / 0.197 inch**

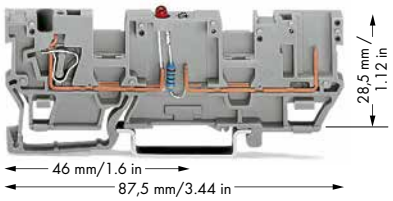

769-219/281-434 769-219/281-413

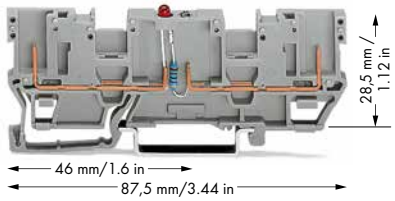

769-209/281-434 769-209/281-413

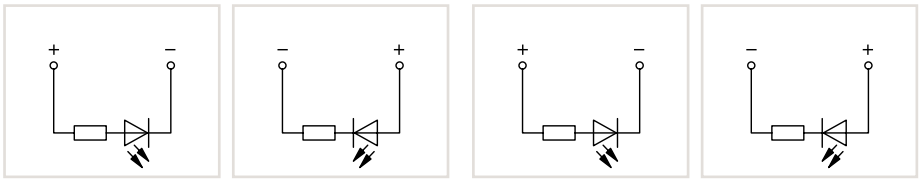

❶ See application notes for:
Insulation stop, page 331
Staggered jumper, page 333
Push-in type wire jumper, page 333
Test plug module, page 328

	Item No.	Pack. Unit
1-conductor/1-pin LED carrier terminal block, with two jumper positions		
Anode left	**769-219/281-434**	50
Anode right	**769-219/281-413**	50

	Item No.	Pack. Unit
2-pin LED carrier terminal block, with two jumper positions		
Anode left	**769-209/281-434**	50
Anode right	**769-209/281-413**	50

Item-Specific Accessories

		Item No.	Pack. Unit
End and intermediate plate, 1.1 mm thick			
	orange	**769-312**	100 (4x25)
	gray	**769-311**	100 (4x25)
Separator, oversized, 1.1 mm thick			
	orange	**769-314**	100 (4x25)
Insulation stop, 5 pcs/strip, 0.08 ... 0.2 mm² "s" (0.14 mm² "f-st") ❶			
	white	**769-470**	200 (8x25)
Insulation stop, 5 pcs/strip, 0.25 ... 0.5 mm² ❶			
	light gray	**769-471**	200 (8x25)
Insulation stop, 5 pcs/strip, 0.75 ... 1 mm² ❶			
	dark gray	**769-472**	200 (8x25)
Protective warning marker, with black high-voltage symbol, for 5 terminal blocks			
	yellow	**280-415**	100 (4x25)
Test plug, with 500 mm cable, 2 mm Ø, max. 42 V			
	red	**210-136**	50

Item-Specific Accessories

		Item No.	Pack. Unit
End and intermediate plate, 1.1 mm thick			
	orange	**769-310**	100 (4x25)
	gray	**769-309**	100 (4x25)
Separator, oversized, 1.1 mm thick			
	orange	**769-313**	100 (4x25)

769 Series Accessories

Appropriate marking system:
Mini-WSB/Mini-WSB Inline (see Section 13)

		Item No.	Pack. Unit
Coding pin, for coding female plugs			
	orange	**769-435**	100 (4x25)
Test plug, with 500 mm cable, 2.3 mm Ø, max. 42 V			
	yellow	**210-137**	50
Adjacent jumper, insulated, I_N = I_N terminal block			
	gray	**280-402**	200 (8x25)
Staggered jumper, insulated, Spacing: 5 mm, I_N 24 A ❶			
	from 1 to 2	**780-452**	100 (4x25)
	from 1 to 3	**780-453**	100 (4x25)
	from 1 to 4	**780-454**	100 (4x25)
	from 1 to 5	**780-455**	50 (2x25)
	from 1 to 6	**780-456**	50 (2x25)
	from 1 to 7	**780-457**	50 (2x25)
	from 1 to 8	**780-458**	50 (2x25)
Push-in type wire jumper, insulated, wire size 0.75 mm², I_N 9 A ❶			
	L = 60 mm	**249-125**	10
	L = 110 mm	**249-126**	10
	L = 250 mm	**249-127**	10
Test plug module, snaps together, 5 mm wide ❶			
	gray	**280-418**	100 (4x25)
1-conductor female plug, straight			
	gray	**769-101**	200
1-conductor female plug, angled			
	gray	**769-101/022-000**	200
2-conductor female plug			
	gray	**769-121**	100

6

CAGE CLAMP®

X-COM®-SYSTEM – 1-Conductor/1-Pin and 2-Pin Carrier Terminal Blocks and 1-Conductor Female Plugs

Types of Assembly

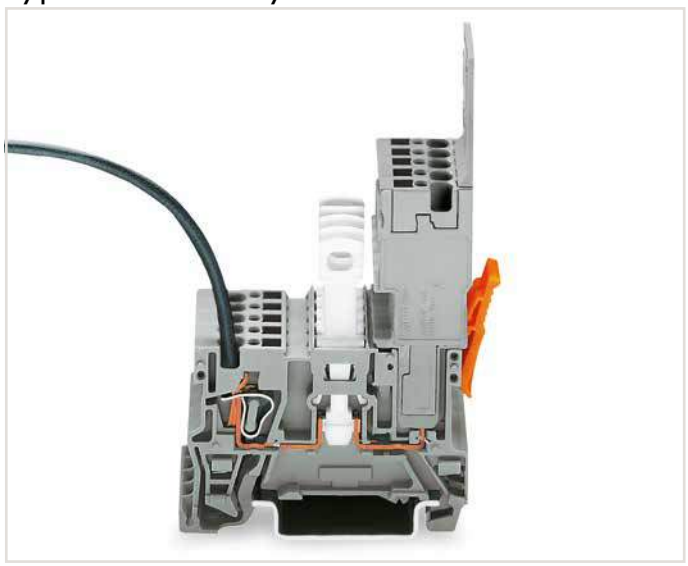

1-conductor female plug
Disconnect carrier terminal blocks cannot be commoned.



1-conductor female plug
Disconnect carrier terminal blocks cannot be commoned.



1-conductor female plug
Diode carrier terminal blocks cannot be commoned.

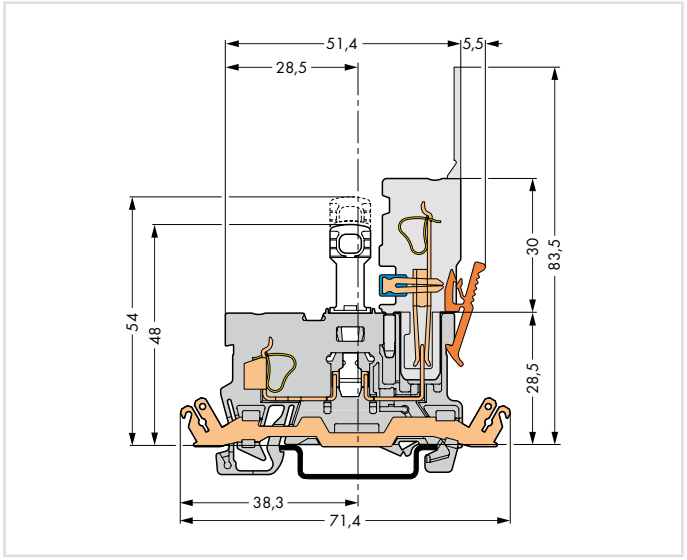

Disconnect carrier terminal block with shield contact



1-conductor female plug
LED carrier terminal blocks cannot be commoned.

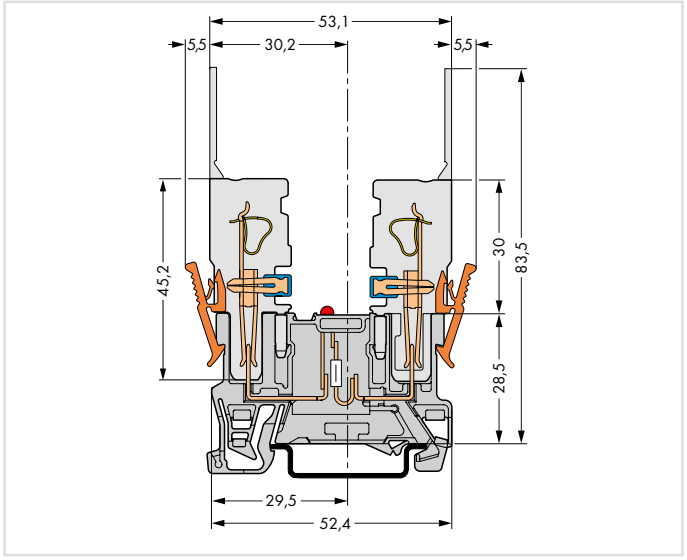

LED carrier terminal block

CAGE CLAMP®

X-COM®-SYSTEM – 1-Conductor/1-Pin and 2-Pin Carrier Terminal Blocks with Two Jumper Positions and 1-/2-Conductor Female Plugs

Types of Assembly

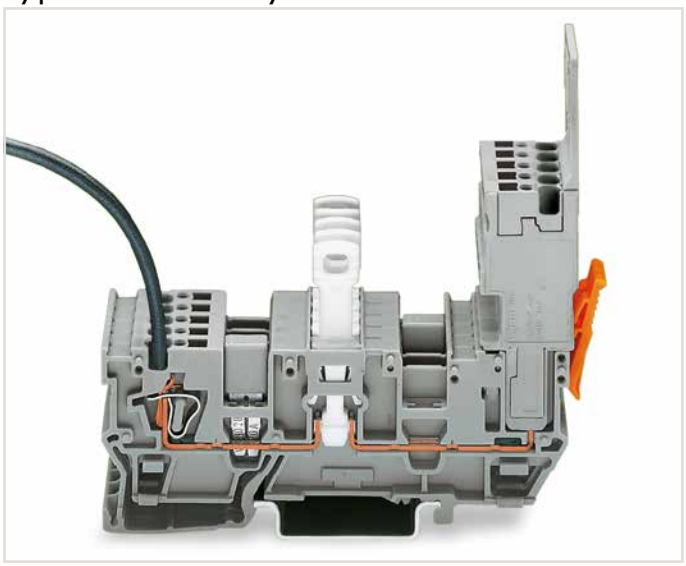

1-conductor female plug
Disconnect carrier terminal blocks can be commoned via 280 and 780 Series Jumpers and tested using a 280 Series Test Plug Adapter.

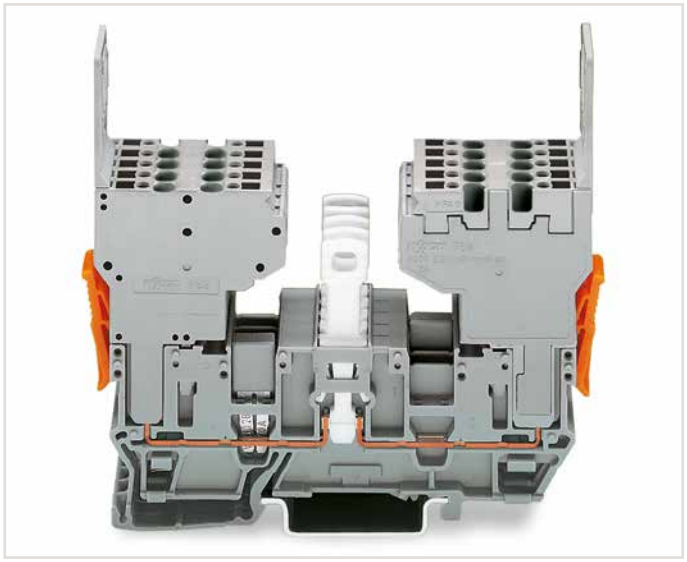

2-conductor female plug
Disconnect carrier terminal blocks can be commoned via 280 and 780 Series Jumpers.



2-conductor female plug
Diode carrier terminal blocks can be commoned via 280 and 780 Series Jumpers and tested using a 280 Series Test Plug Adapter.

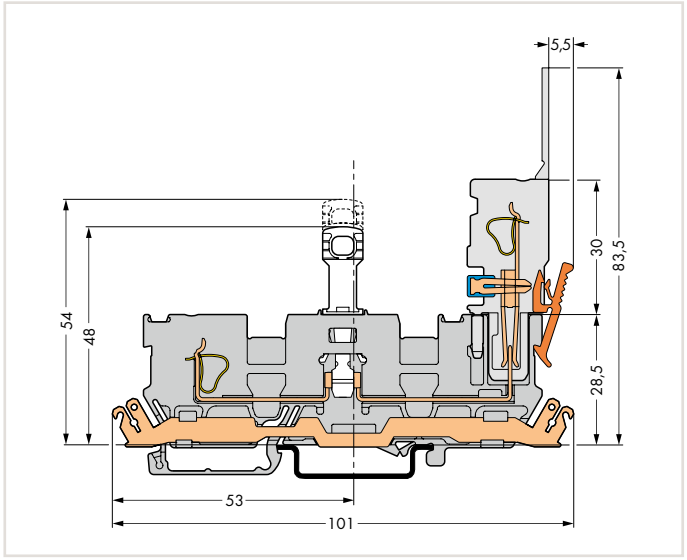

Disconnect carrier terminal block with shield contact
For other dimensions, see 769-171 Carrier Terminal Block.

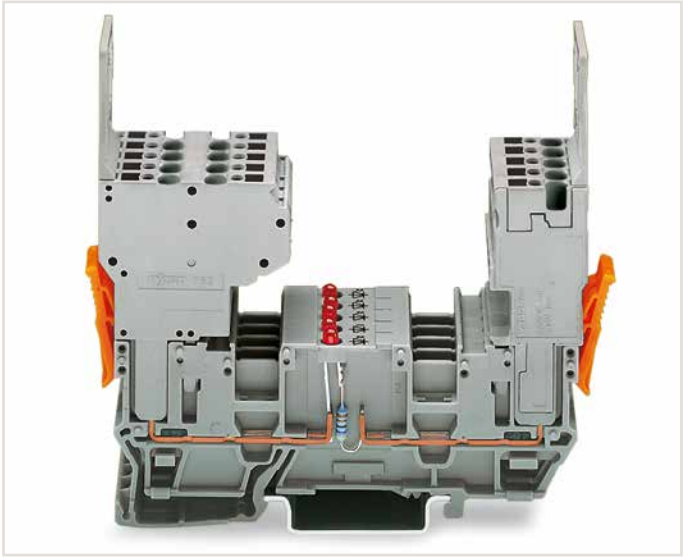

2-conductor and 1-conductor female plugs (may be reversed)
LED carrier terminal blocks can be commoned via 280 and 780 Series Jumpers and tested using a 280 Series Test Plug Adapter.

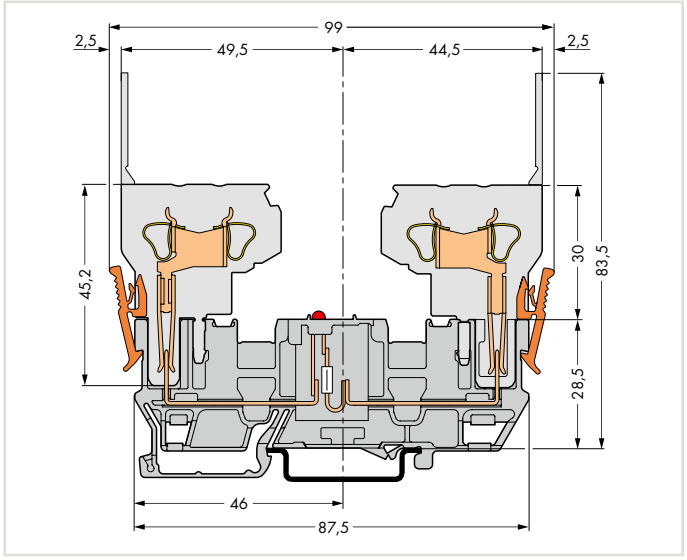

LED carrier terminal block
For other dimensions, see 769-151 Carrier Terminal Block.

CAGE CLAMP®

X-COM®-SYSTEM – 1-Conductor/1-Conductor Disconnect Carrier Terminal Blocks with Two Jumper Positions

4 mm², 769 Series

0.08 … 4 mm² | 28 … 12 AWG
400 V/6 kV/3 ❶
I_N 16 A

Terminal block width 5 mm / 0.197 inch
8 … 9 mm / 0.31 … 0.35 inch

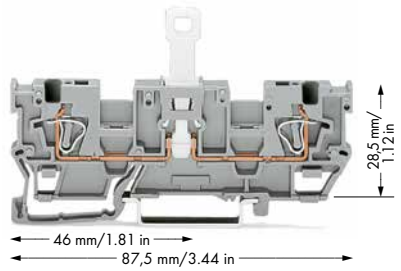

❶ 400 V = rated voltage
6 kV = rated surge voltage
3 = pollution degree
250 V / 4 kV / 3 =
Nominal voltage with shield contact
(see Section 14)

❸ See application notes for:
Insulation stop, page 331
Staggered jumper, page 333
Push-in type wire jumper, page 333
Test plug module, page 328

6

	Item No.	Pack. Unit
1-conductor/1-conductor disconnect carrier terminal block, with two jumper positions		
gray	**769-242**	50
1-conductor/1-conductor disconnect carrier terminal block, with shield contact, with two jumper positions, (no picture)		
gray	**769-243** ❶	50

769 Series Accessories

End and intermediate plate, 1.1 mm thick



orange	**769-318**	100 (4x25)
gray	**769-317**	100 (4x25)

Seperator plate, oversized, 1.1 mm thick



orange	**769-319**	100 (4x25)

Insulation stop, 5 pcs/strip, 0.08 … 0.2 mm² "s" (0.14 mm² "f-st") ❷



white	**769-470**	200 (8x25)

Insulation stop, 5 pcs/strip, 0.25 … 0.5 mm² ❷



light gray	**769-471**	200 (8x25)

Insulation stop, 5 pcs/strip, 0.75 … 1 mm² ❷



dark gray	**769-472**	200 (8x25)

Adjacent jumper, insulated, I_N = I_N terminal block



gray	**280-402**	200 (8x25)

Alternate jumper, insulated, I_N = I_N terminal block



gray	**280-409**	100 (4x25)

Push-in type wire jumper, insulated, wire size 0.75 mm², I_N 9 A ❸



L = 60 mm	**249-125**	10
L = 110 mm	**249-126**	10
L = 250 mm	**249-127**	10

Accessories

Appropriate marking system:
Mini-WSB/Mini-WSB Inline (see Section 13)

Staggered jumper, insulated, Spacing: 5 mm, I_N 24 A ❷



from 1 to 2	**780-452**	100 (4x25)
from 1 to 3	**780-453**	100 (4x25)
from 1 to 4	**780-454**	100 (4x25)
from 1 to 5	**780-455**	50 (2x25)
from 1 to 6	**780-456**	50 (2x25)
from 1 to 7	**780-457**	50 (2x25)
from 1 to 8	**780-458**	50 (2x25)

Protective warning marker, with black high-voltage symbol, for 5 terminal blocks



yellow	**280-415**	100 (4x25)

Disconnect lock, for disconnect tab used on disconnect terminal blocks (280/281 and 769 Series)



red	**709-170**	200 (8x25)

Test plug module, snaps together, 5 mm wide ❷



gray	**280-418**	100 (4x25)

Spacer module, snaps together, 5 mm wide



gray	**280-419**	100 (4x25)

Test plug adapter, 5 mm wide, for 210-137 Test Plug (2.3 mm Ø), for 1.5 … 4 mm² terminal blocks



gray	**280-404**	100 (4x25)

Test plug, with 500 mm cable, 2 mm Ø, max. 42 V



red	**210-136**	50

Test plug, with 500 mm cable, 2.3 mm Ø, max. 42 V



yellow	**210-137**	50

Screwless end stop, for DIN-35 rail, 6 mm wide



gray	**249-116**	100 (4x25)

Screwless end stop, for DIN-35 rail, 10 mm wide



gray	**249-117**	50 (2x25)

Mini-WSB Quick marking system, white, 10 strips with 10 markers per card, 5 mm wide markers



plain	**248-501**	5

Mini-WSB Quick marking system, plain, 10 strips with 10 markers per card, 5 mm wide markers



yellow	**248-501/000-002**	
red	**248-501/000-005**	
blue	**248-501/000-006**	
gray	**248-501/000-007**	
orange	**248-501/000-012**	
light green	**248-501/000-017**	
green	**248-501/000-023**	
violet	**248-501/000-024**	
		5

Overview of certification organizations, see page 654

CAGE CLAMP®

X-COM®-SYSTEM – 1-Conductor/1-Conductor Disconnect Carrier Terminal Blocks with Two Jumper Positions

Types of Assembly

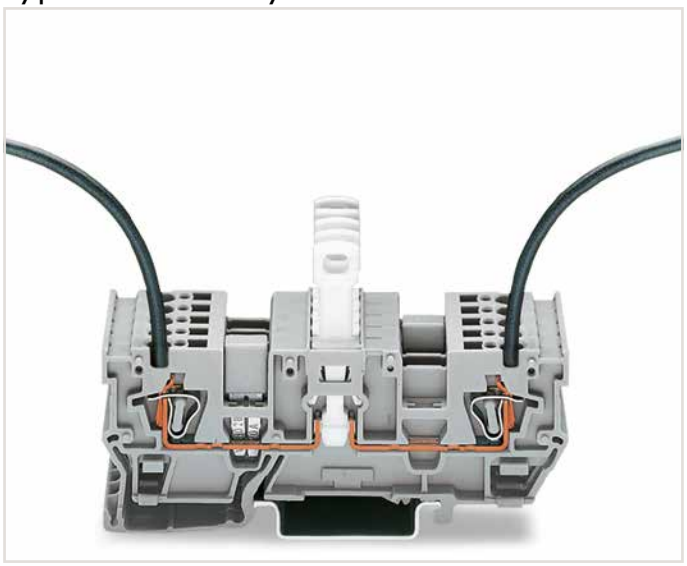

Carrier terminal blocks can be commoned via 280 and 780 Series Jumpers and tested using a 280 Series Test Plug Adapter.

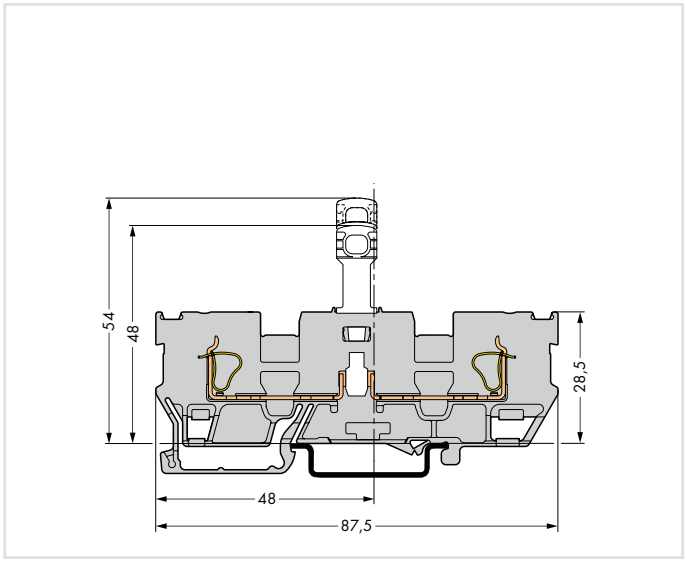

Disconnect carrier terminal block

6

CAGE CLAMP®

X-COM®-SYSTEM – 1-Conductor/1-Pin Carrier Terminal Blocks and Carrier Terminal Blocks for Pluggable Modules (Fuses, Relays, Optocouplers, etc.)

4 mm², 769 Series

0.08 … 4 mm²	28 … 12 AWG
400 V/6 kV/3 ❶	300 V, 20 A
I_N 16 A ❷	300 V, 20 A
Terminal block width 5 mm / 0.197 inch	
8 … 9 mm / 0.31 … 0.35 inch	

0.08 … 4 mm²	28 … 12 AWG
400 V/6 kV/3 ❶	300 V, 20 A
I_N 16 A ❷	300 V, 20 A
8 … 9 mm / 0.31 … 0.35 inch	

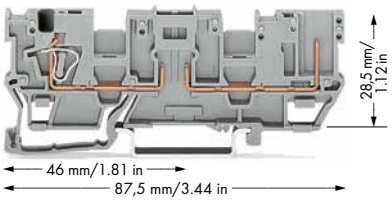

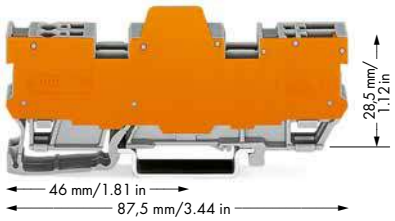

❶ 400 V = rated voltage
6 kV = rated surge voltage
3 = pollution degree
(see Section 14)

❷ 16 A, 85 °C upper temperature limit (current-carrying capacity curves upon request)

❸ See application notes for:
Insulation stop, page 331
Staggered jumper, page 333
Push-in type wire jumper, page 333
Test plug module, page 328

❹ Note:
2-conductor female plug is not suitable.

6

1-conductor/1-pin carrier terminal block, with two jumper positions, gray	Item No.	Pack. Unit
◯ 2-pole	**769-181**	50

1-conductor/1-pin carrier terminal block, with two jumper positions, with orange separator plate, gray	Item No.	Pack. Unit
◯ 4-pole, 11.1 mm wide	**769-182/769-314**	10
◯ 6-pole, 16.1 mm wide	**769-183/769-314**	5
◯ 8-pole, 21.1 mm wide	**769-184/769-314**	5
◯ 10-pole, 26.1 mm wide	**769-185/769-314**	5

Accessories

Test plug, with 500 mm cable, 2 mm Ø, max. 42 V



red **210-136** 50

Test plug, with 500 mm cable, 2.3 mm Ø, max. 42 V



yellow **210-137** 50

Test plug adapter, 5 mm wide, for 210-137 Test Plug (2.3 mm Ø), for 1.5 … 4 mm² terminal blocks



gray **280-404** 100 (4x25)

1-conductor female plug, straight ❹

gray **769-101** 200

769 Series Accessories

Appropriate marking system:
Mini-WSB/Mini-WSB Inline (see Section 13)

End and intermediate plate, 1.1 mm thick

orange **769-312** 100 (4x25)
gray **769-311** 100 (4x25)

Separator, oversized, 1.1 mm thick



orange **769-314** 100 (4x25)

Insulation stop, 5 pcs/strip, 0.08 … 0.2 mm² "s" (0.14 mm² "f-st") ❸



white **769-470** 200 (8x25)

Insulation stop, 5 pcs/strip, 0.25 … 0.5 mm² ❸



light gray **769-471** 200 (8x25)

Insulation stop, 5 pcs/strip, 0.75 … 1 mm² ❸



dark gray **769-472** 200 (8x25)

Coding pin, for coding female plugs



orange **769-435** 100 (4x25)

Adjacent jumper, insulated, I_N = I_N terminal block



gray **280-402** 200 (8x25)

Alternate jumper, insulated, I_N = I_N terminal block



gray **280-409** 100 (4x25)

Staggered jumper, insulated, Spacing: 5 mm, I_N 24 A ❸



from 1 to 2	**780-452**	100 (4x25)
from 1 to 3	**780-453**	100 (4x25)
from 1 to 4	**780-454**	100 (4x25)
from 1 to 5	**780-455**	50 (2x25)
from 1 to 6	**780-456**	50 (2x25)
from 1 to 7	**780-457**	50 (2x25)
from 1 to 8	**780-458**	50 (2x25)

Push-in type wire jumper, insulated, wire size 0.75 mm², I_N 9 A ❸



L = 60 mm	**249-125**	10
L = 110 mm	**249-126**	10
L = 250 mm	**249-127**	10

Protective warning marker, with black high-voltage symbol, for 5 terminal blocks



yellow **280-415** 100 (4x25)

Test plug module, snaps together, 5 mm wide ❸



gray **280-418** 100 (4x25)

Spacer module, snaps together, 5 mm wide



gray **280-419** 100 (4x25)

Overview of certification organizations, see page 654

CAGE CLAMP®

X-COM®-SYSTEM
1-Conductor Female Plugs and Selection of Pluggable Modules
Types of Assembly

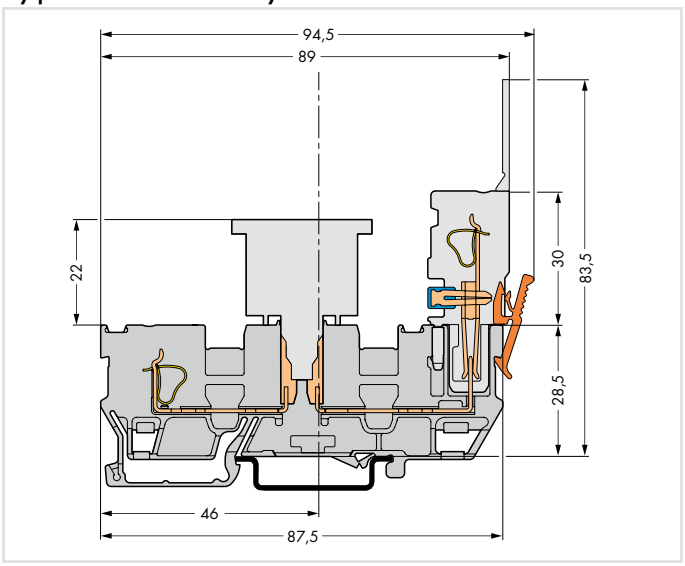

Carrier terminal block

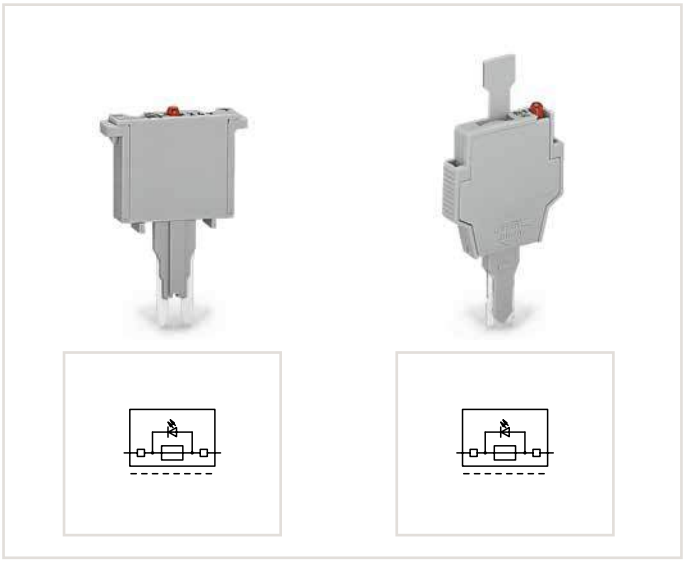

Selection of pluggable modules

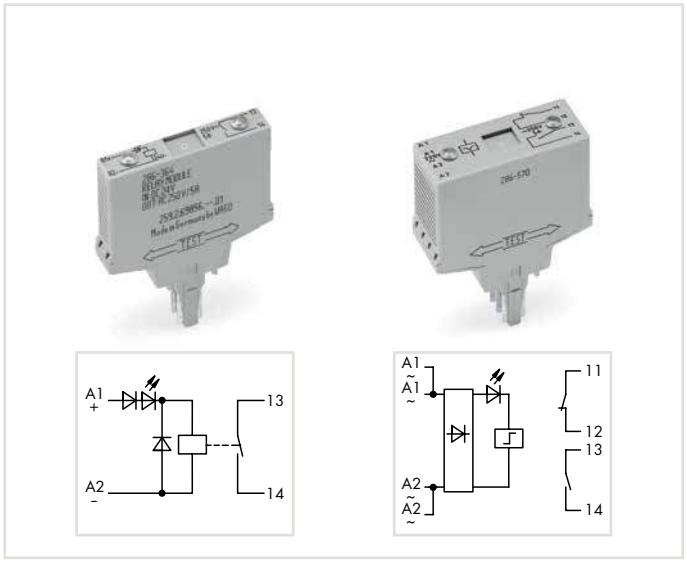

Selection of pluggable modules

6

X-COM®-SYSTEM – 2-Pin Carrier Terminal Blocks and Carrier Terminal Blocks for Pluggable Modules (Fuses, Relays, Optocouplers, etc.)

4 mm², 769 Series

400 V/6 kV/3 ❶ | 300 V, 20 A I_N 16 A ❷ | 300 V, 20 A **Terminal block width 5 mm / 0.197 inch**	400 V/6 kV/3 ❶ | 300 V, 20 A I_N 16 A ❷ | 300 V, 20 A

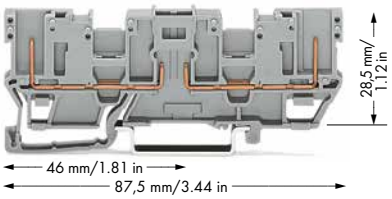

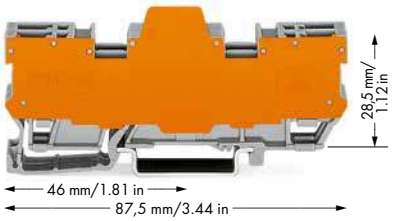

❶ 400 V = rated voltage
6 kV = rated surge voltage
3 = pollution degree
(see Section 14)

❷ 16 A, 85 °C upper temperature limit (current-carrying capacity curves upon request)

❸ See application notes for:
Staggered jumper, page 333
Push-in type wire jumper, page 333

❹ Note:
2-conductor female plug is not suitable.

6

	Item No.	Pack. Unit
2-pin carrier terminal block, with two jumper positions, gray		
○ 2-pole	**769-161**	50

	Item No.	Pack. Unit
2-pin carrier terminal block, with two jumper positions, with orange separator plate, gray		
○ 4-pole, 11.1 mm wide	**769-162/769-313**	10
○ 6-pole, 16.1 mm wide	**769-163/769-313**	5
○ 8-pole, 21.1 mm wide	**769-164/769-313**	5
○ 10-pole, 26.1 mm wide	**769-165/769-313**	5

Accessories

Mini-WSB Quick marking system, plain, 10 strips with 10 markers per card, 5 mm wide markers



yellow	**248-501/000-002**	
red	**248-501/000-005**	
blue	**248-501/000-006**	
gray	**248-501/000-007**	
orange	**248-501/000-012**	
light green	**248-501/000-017**	
green	**248-501/000-023**	
violet	**248-501/000-024**	
		5

769 Series Accessories

Appropriate marking system:
Mini-WSB/Mini-WSB Inline (see Section 13)

End and intermediate plate, 1.1 mm thick



orange	**769-310**	100 (4x25)	
gray	**769-309**	100 (4x25)	

Separator, oversized, 1.1 mm thick



orange	**769-313**	100 (4x25)	

Adjacent jumper, insulated, I_N = I_N terminal block



gray	**280-402**	200 (8x25)	

Alternate jumper, insulated, I_N = I_N terminal block



gray	**280-409**	100 (4x25)	

Staggered jumper, insulated, Spacing: 5 mm, I_N 24 A ❸



from 1 to 2	**780-452**	100 (4x25)	
from 1 to 3	**780-453**	100 (4x25)	
from 1 to 4	**780-454**	100 (4x25)	
from 1 to 5	**780-455**	50 (2x25)	
from 1 to 6	**780-456**	50 (2x25)	
from 1 to 7	**780-457**	50 (2x25)	
from 1 to 8	**780-458**	50 (2x25)	

Coding pin, for coding female plugs



orange	**769-435**	100 (4x25)	

Push-in type wire jumper, insulated, wire size 0.75 mm², ❸



I_N 9 A			
L = 60 mm	**249-125**		10
L = 110 mm	**249-126**		10
L = 250 mm	**249-127**		10

Test plug, with 500 mm cable, 2.3 mm Ø, max. 42 V



yellow	**210-137**		50

1-conductor female plug, straight ❹



gray	**769-101**		200

1-conductor female plug, angled



gray	**769-101/022-000**		200

Screwless end stop, for DIN-35 rail, 6 mm wide



gray	**249-116**	100 (4x25)	

Screwless end stop, for DIN-35 rail, 10 mm wide



gray	**249-117**	50 (2x25)	

Mini-WSB Quick marking system, white, 10 strips with 10 markers per card, 5 mm wide markers



plain	**248-501**		5

X-COM®-SYSTEM
1-Conductor Female Plugs and Selection of Pluggable Modules
Types of Assembly

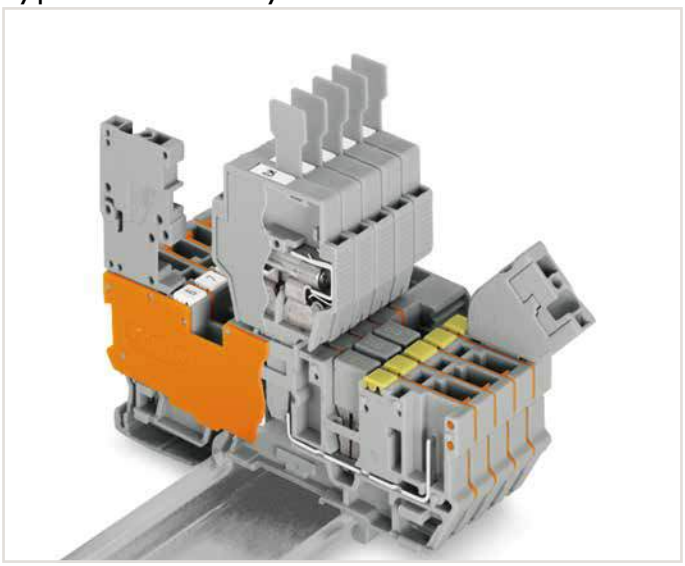

With 6 mm wide fuse plugs, only 1-pole female plugs can be used. Commoning is only possible using adjacent jumpers (280 Series) and push-in type wire jumpers.

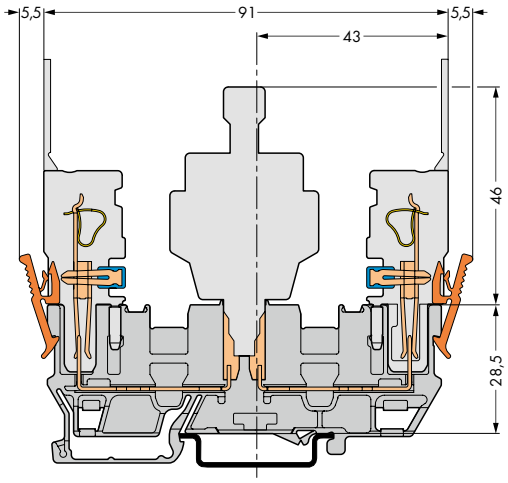

Carrier terminal block
For other dimensions, see 769-151 Carrier Terminal Block.



2-pin carrier terminal block for pluggable modules with orange separator plate

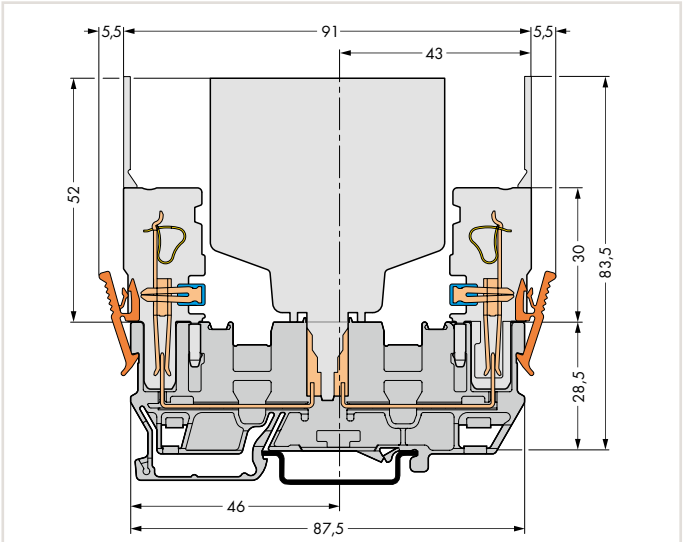

Carrier terminal block

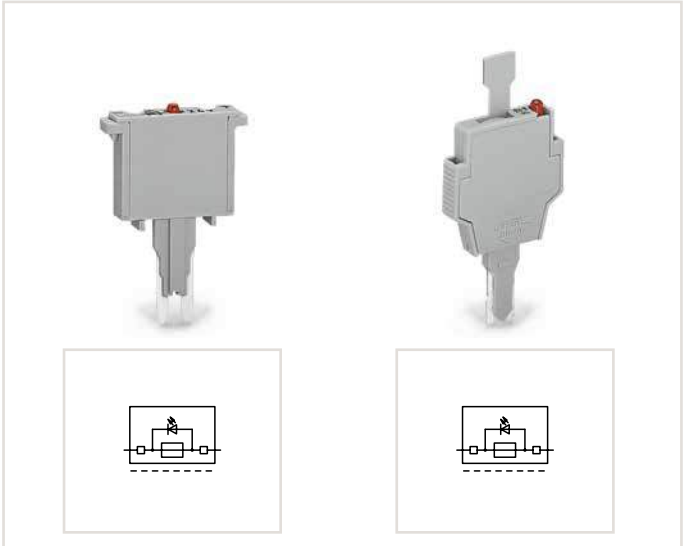

Selection of pluggable modules

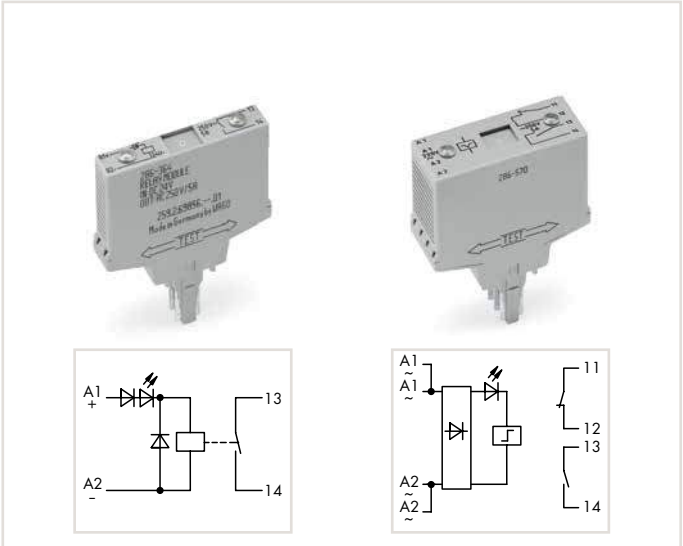

Selection of pluggable modules

CAGE CLAMP®

X-COM®-SYSTEM – 1-Conductor/1-Conductor Carrier Terminal Blocks and Carrier Terminal Blocks for Pluggable Modules (Fuses, Relays, Optocouplers, etc.)

4 mm², 769 Series

0.08 … 4 mm²	28 … 12 AWG
400 V/6 kV/3 ❶	300 V, 20 A
I_N 16 A ❷	300 V, 20 A
Terminal block width 5 mm / 0.197 inch	
8 … 9 mm / 0.31 … 0.35 inch	

0.08 … 4 mm²	28 … 12 AWG
400 V/6 kV/3 ❶	300 V, 20 A
I_N 16 A ❷	300 V, 20 A
8 … 9 mm / 0.31 … 0.35 inch	

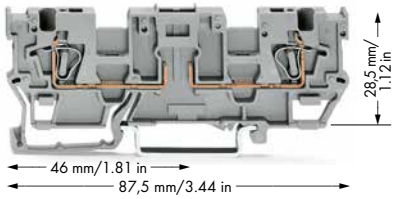

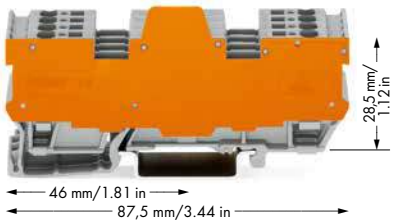

❶ 400 V = rated voltage
6 kV = rated surge voltage
3 = pollution degree
(see Section 14)

❷ 16 A, 85 °C upper temperature limit (current-carrying capacity curves upon request)

❸ See application notes for:
Insulation stop, page 331
Staggered jumper, page 333
Push-in type wire jumper, page 333

6

1-conductor/1-conductor carrier terminal block, with two jumper positions, gray

	Item No.	Pack. Unit
2-pole	769-191	50

1-conductor/1-conductor carrier terminal block, with two jumper positions, with orange separator plate, gray

	Item No.	Pack. Unit
4-pole, 11.1 mm wide	769-192/769-319	10
6-pole, 16.1 mm wide	769-193/769-319	5
8-pole, 21.1 mm wide	769-194/769-319	5
10-pole, 26.1 mm wide	769-195/769-319	5

769 Series Accessories

Appropriate marking system:
Mini-WSB/Mini-WSB Inline (see Section 13)

End and intermediate plate, 1.1 mm thick



orange	769-318	100 (4x25)
gray	769-317	100 (4x25)

Seperator plate, oversized, 1.1 mm thick



orange	769-319	100 (4x25)

Insulation stop, 5 pcs/strip, 0.08 … 0.2 mm² "s" (0.14 mm² "f-st") ❸



white	769-470	200 (8x25)

Insulation stop, 5 pcs/strip, 0.25 … 0.5 mm² ❸



light gray	769-471	200 (8x25)

Insulation stop, 5 pcs/strip, 0.75 … 1 mm² ❸



dark gray	769-472	200 (8x25)

Protective warning marker, with black high-voltage symbol, for 5 terminal blocks



yellow	280-415	100 (4x25)

Adjacent jumper, insulated, I_N = I_N terminal block



gray	280-402	200 (8x25)

Alternate jumper, insulated, I_N = I_N terminal block



gray	280-409	100 (4x25)

Staggered jumper, insulated, Spacing: 5 mm, I_N 24 A ❸



from 1 to 2	780-452	100 (4x25)
from 1 to 3	780-453	100 (4x25)
from 1 to 4	780-454	100 (4x25)
from 1 to 5	780-455	50 (2x25)
from 1 to 6	780-456	50 (2x25)
from 1 to 7	780-457	50 (2x25)
from 1 to 8	780-458	50 (2x25)

Push-in type wire jumper, insulated, wire size 0.75 mm², I_N 9 A ❸



L = 60 mm	249-125	10
L = 110 mm	249-126	10
L = 250 mm	249-127	10

Test plug, with 500 mm cable, 2 mm Ø, max. 42 V



red	210-136	50

Test plug, with 500 mm cable, 2.3 mm Ø, max. 42 V



yellow	210-137	50

Mini-WSB Quick marking system, white, 10 strips with 10 markers per card, 5 mm wide markers



plain	248-501	5

Accessories

Mini-WSB Quick marking system, plain, 10 strips with 10 markers per card, 5 mm wide markers



yellow	248-501/000-002	
red	248-501/000-005	
blue	248-501/000-006	
gray	248-501/000-007	
orange	248-501/000-012	
light green	248-501/000-017	
green	248-501/000-023	
violet	248-501/000-024	
		5

Screwless end stop, for DIN-35 rail, 6 mm wide



gray	249-116	100 (4x25)

Screwless end stop, for DIN-35 rail, 10 mm wide



gray	249-117	50 (2x25)

CAGE CLAMP®

X-COM®-SYSTEM
Selection of Pluggable Modules
Types of Assembly

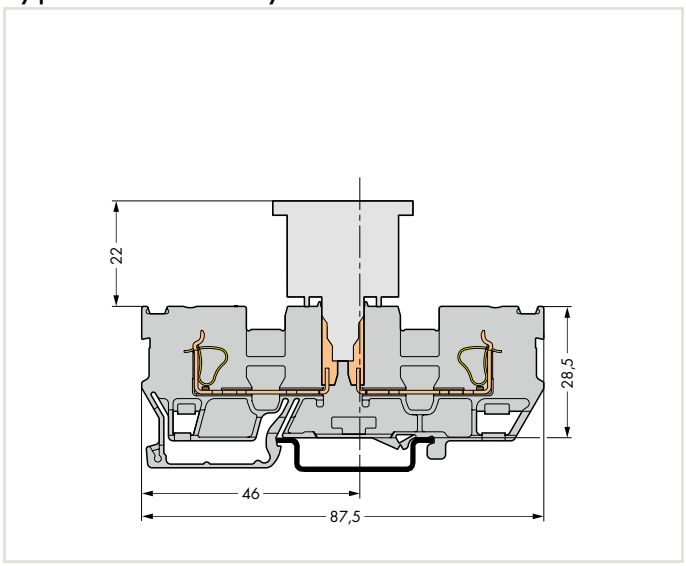

Carrier terminal block

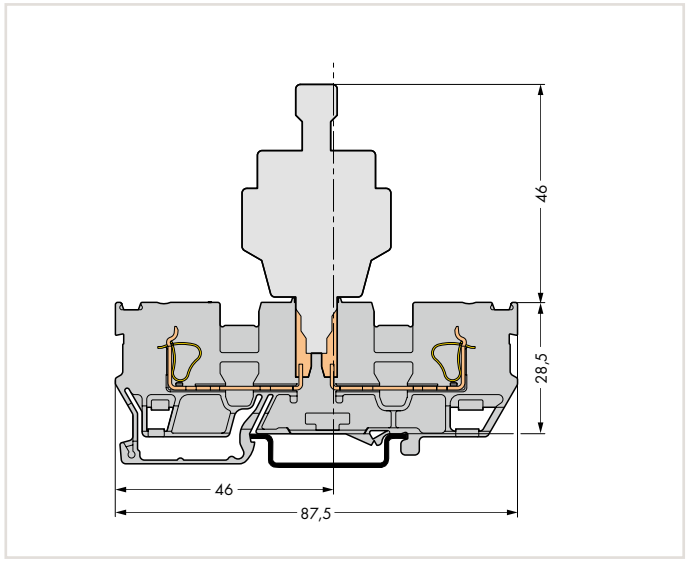

Carrier terminal block

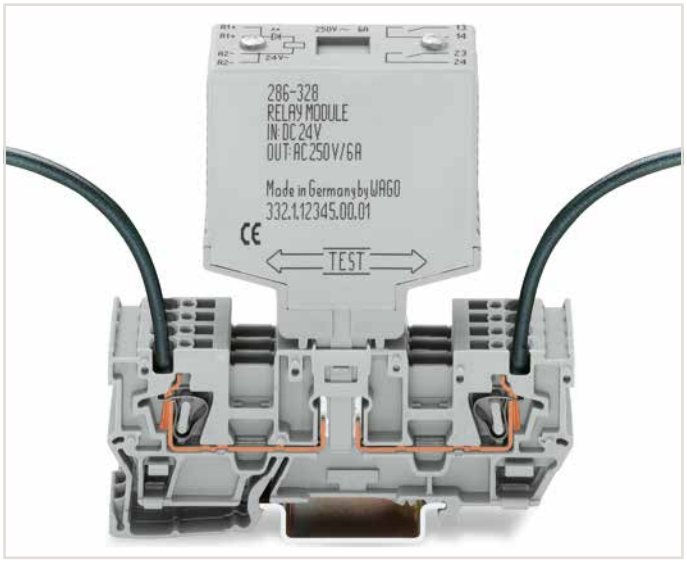

1-conductor/1-conductor carrier terminal block for pluggable modules

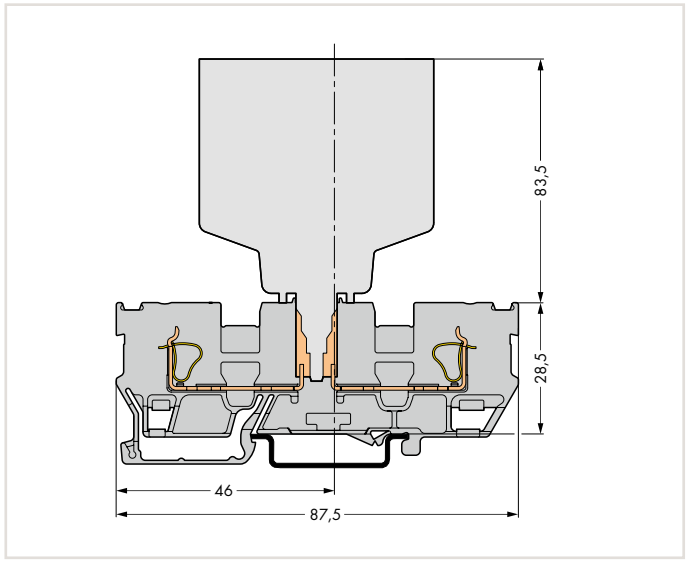

Carrier terminal block

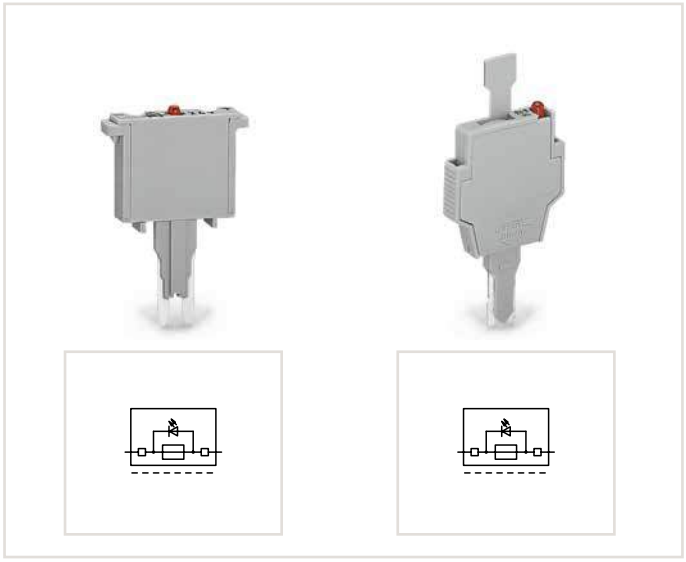

Selection of pluggable modules

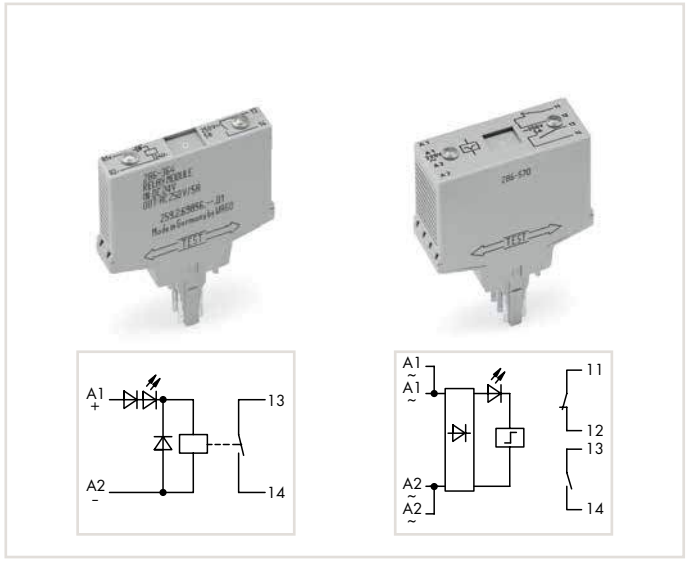

Selection of pluggable modules

X-COM®-SYSTEM
Fuse Plugs and Pluggable Diode and LED Modules

Fuse plugs	Diode modules	LED modules

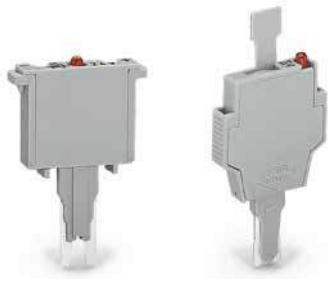





6

Item No.		Pack. Unit
Fuse plug, 5 mm wide,		
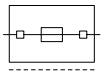	with soldered miniature fuse	
250 mA FF	**280-850**	100
500 mA FF	**280-852**	100
1 A FF	**280-854**	100
2 A FF	**280-856**	100
Fuse plug, 5 mm wide,		
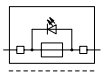	with soldered miniature fuse with indicator lamp, additionally LED, 15 ... 30 VDC	
Leakage current in case of blown fuse: 5 ... 20 mA		
250 mA FF	**280-850/281-413**	100
500 mA FF	**280-852/281-413**	100
1 A FF	**280-854/281-413**	100
1 A FF	**280-856/281-413**	100
Fuse plug with pull-tab, 6 mm wide,		
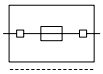	for miniature fuses 5 x 20 mm and 5 x 25 mm	
	281-511	50
with hole for one LED (for self-assembly)		
	281-512	50
Fuse plug with pull-tab, 6 mm wide,		
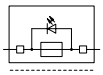	for miniature fuses 5 x 20 mm and 5 x 25 mm, with LED inicator	
Leakage current in case of blown fuse: 5 ... 20 mA		
Use in both switching directions		
24 V AC/DC	**281-512/281-501**	50
Fuse plug with pull-tab, 6 mm wide,		
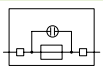	for miniature fuses 5 x 20 mm and 5 x 25 mm with neon lamp	
Leakage current in case of blown fuse: Neon lamp < 0.4 mA		
120 V AC/DC	**281-512/281-418**	50
230 V AC/DC	**281-512/281-417**	50

Item No.		Pack. Unit
Diode module, 5 mm wide,		
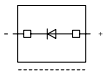	with 1N4007 diode	
	280-801/281-411	100
Diode module, 5 mm wide,		
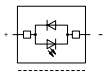	with recovery diode 1N4007, additional LED	
24 VDC	**280-801/281-420**	100
48 VDC	**280-801/281-421**	100

Item No.		Pack. Unit
LED module, 5 mm wide,		
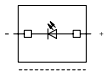	with red LED	
	280-801/281-413	100
24 VDC	**280-801/281-414**	100
48 VDC		
LED module, 5 mm wide,		
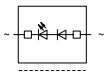	with red LED	
24 V AC/DC	**280-801/281-415**	100
48 V AC/DC	**280-801/281-416**	100
Neon indicator module, 5 mm wide		
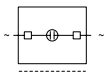		
120 V AC/DC	**280-801/281-418**	100
230 V AC/DC	**280-801/281-417**	100

CAGE CLAMP®

X-COM®-SYSTEM
1-Conductor/1-Pin Double-Deck Carrier Terminal Blocks
2.5 (4 "f-st") mm², 870 Series

0.08 ... 2.5 (4"f-st")mm² ❶ | 28 ... 12 AWG 500 V/6 kV/3 ❷ | 300 V, 20 A I_N 16 A Terminal block width 5 mm / 0.197 inch 6 ... 7 mm / 0.24 ... 0.28 inch	0.08 ... 2.5 (4"f-st")mm² ❶ | 28 ... 12 AWG 500 V/6 kV/3 ❷ I_N 16 A Terminal block width 5 mm / 0.197 inch 6 ... 7 mm / 0.24 ... 0.28 inch

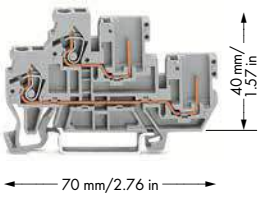

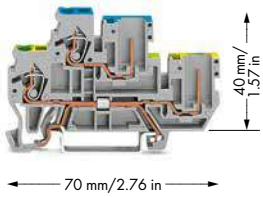

❶ Max. insulation diameter: 4.4 mm

❷ 500 V = rated voltage
6 kV = rated surge voltage
3 = pollution degree
(see Section 14)

❸ See application notes for:
Insulation stop, page 331

❹ 2-conductor female plugs cannot be used.

	Item No.	Pack. Unit
1-conductor/1-pin double-deck carrier terminal block, through/through terminal block, gray housing		
L/L	**870-101**	50
N/L	**870-102**	50
L/N	**870-103**	50
1-conductor/1-pin double-deck carrier terminal block, through/through terminal block, blue housing		
N/N	**870-104**	50
Other terminal blocks with the same profile:		
Through	**870-501** Page 412	

	Item No.	Pack. Unit
1-conductor/1-pin double-deck carrier terminal block, ground conductor/through terminal block, gray housing		
PE/N	**870-117**	50
PE/L	**870-127**	50

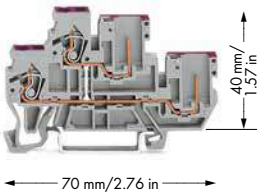

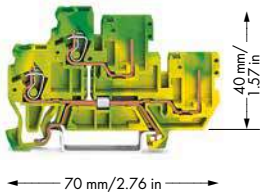

	Item No.	Pack. Unit
2-conductor/2-pin double-deck carrier terminal block, 2-conductor/2-pin through terminal block, internally commoned, violet conductor entry, gray housing		
L	**870-108**	50
2-conductor/2-pin double-deck carrier terminal block, 2-conductor/2-pin through terminal block, internally commoned, violet conductor entry, blue housing		
N	**870-109**	50

	Item No.	Pack. Unit
2-conductor/2-pin double-deck carrier terminal block, 2-conductor/2-pin ground conductor terminal block, internally commoned, green-yellow housing		
PE	**870-107**	50

Accessories

Appropriate marking system:
Mini-WSB/WMB (see Section 13)

End and intermediate plate, 1 mm thick			
	orange	**870-119**	100 (4x25)
	gray	**870-118**	100 (4x25)
Insulation stop, 5 pcs/strip, 0.08 ... 0.2 mm² "s" (0.14 mm² "f-st") ❸			
	white	**280-470**	200 (8x25)
Push-in type jumper bar, insulated, I_N 18 A, light gray			
	2-way	**870-402**	200 (8x25)
	3-way	**870-403**	200 (8x25)
	4-way	**870-404**	100 (4x25)
	5-way	**870-405**	100 (4x25)
	6-way	**870-406**	100 (4x25)
	7-way	**870-407**	100 (4x25)
	8-way	**870-408**	100 (4x25)
	9-way	**870-409**	100 (4x25)
	10-way	**870-410**	50 (2x25)
Push-in type jumper bar, insulated, I_N 18 A, light gray			
	from 1 to 3	**870-433**	200 (8x25)
	from 1 to 4	**870-434**	200 (8x25)
	from 1 to 5	**870-435**	100 (4x25)
	from 1 to 6	**870-436**	100 (4x25)
	from 1 to 7	**870-437**	100 (4x25)
	from 1 to 8	**870-438**	100 (4x25)
	from 1 to 9	**870-439**	100 (4x25)
	from 1 to 10	**870-440**	50 (2x25)
Coding pin, for coding female plugs			
	orange	**769-435**	100 (4x25)
Pin cover, with Mini-WSB marker slot			
	gray	**769-438**	100 (4x25)
	orange	**769-439**	100 (4x25)
1-conductor female plug, angled			
	gray	**769-101/022-000**	200
1-conductor female plug, straight ❹			
	gray	**769-101**	200

Overview of certification organizations, see page 654

CAGE CLAMP®

X-COM®-SYSTEM – 1-Conductor/1-Pin Double-Deck Carrier Terminal Blocks and 1-Conductor Female Plugs

Types of Assembly



Commoning a double-deck through terminal block (870-501) with a 1-conductor/1-pin double-deck terminal block (870-101) via push-in type jumper bar.

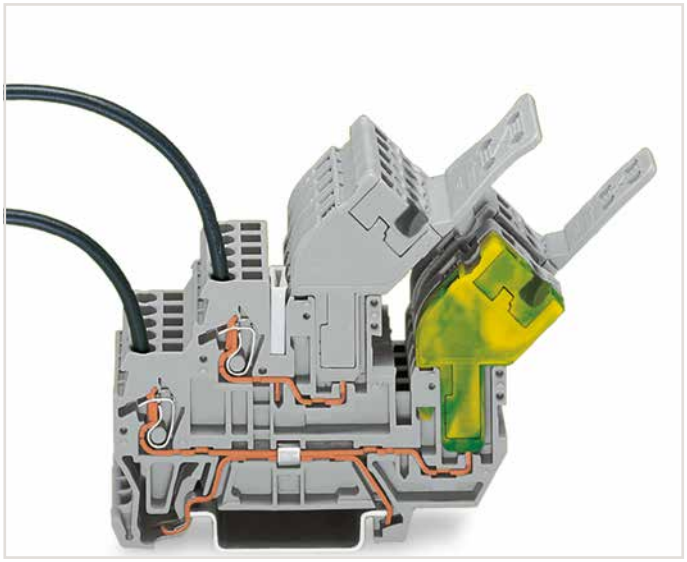

1-conductor female plug, angled
Double-deck carrier terminal blocks can be commoned via 870 Series Push-In Type Jumper Bars.

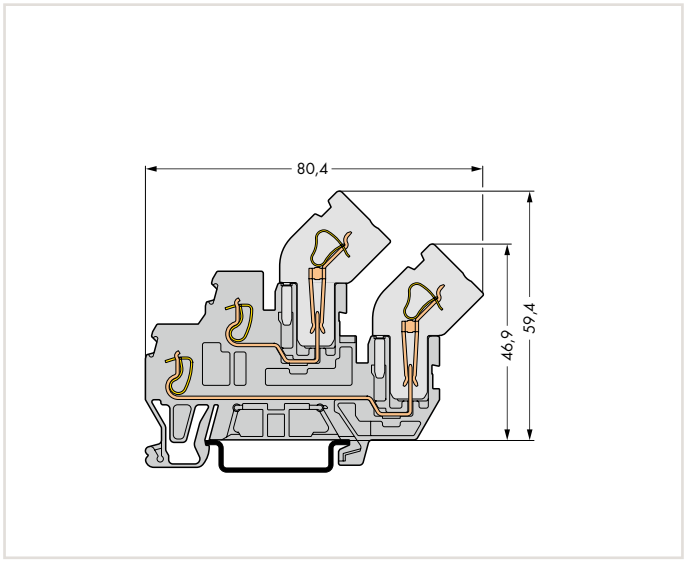

Carrier terminal block

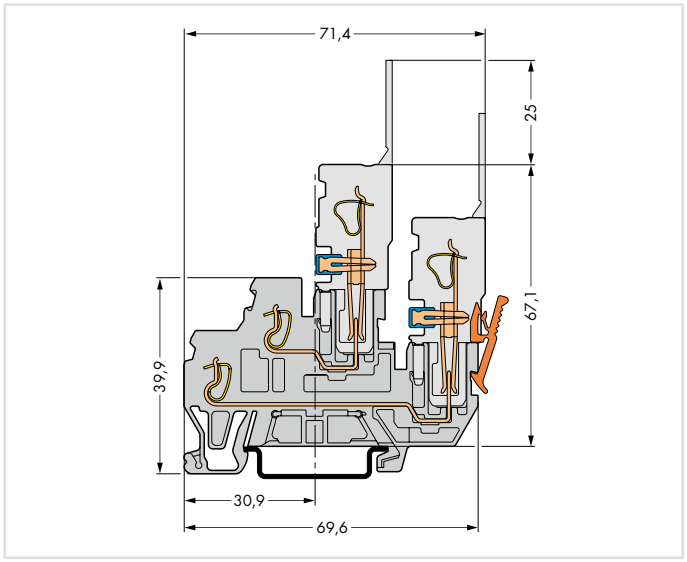

Carrier terminal block

6

CAGE CLAMP®

X-COM®-SYSTEM
2-Conductor/1-Pin Double-Deck Carrier Terminal Blocks
2.5 (4 "f-st") mm², 870 Series

0.08 ... 2.5 (4"f-st")mm² ❶ | 28 ... 12 AWG 500 V/6 kV/3 ❷ I_N 16 A Terminal block width 5 mm / 0.197 inch 6 ... 7 mm / 0.24 ... 0.28 inch	0.08 ... 2.5 (4"f-st")mm² ❶ | 28 ... 12 AWG Terminal block width 5 mm / 0.197 inch 6 ... 7 mm / 0.24 ... 0.28 inch

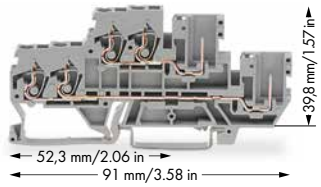

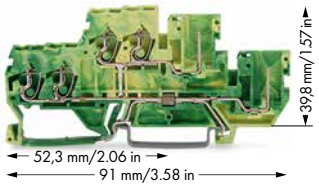

❶ Max. insulation diameter: 4.4 mm

❷ 500 V = rated voltage
6 kV = rated surge voltage
3 = pollution degree
(see Section 14)

❸ See application notes for:
Insulation stop, page 331

❹ Note: 2-conductor female plugs cannot be used.

6

	Item No.	Pack. Unit
2-conductor/1-pin double-deck carrier terminal block, through/through terminal block, gray housing		
L/L	**870-1131**	40

	Item No.	Pack. Unit
4-conductor/2-pin double-deck carrier block, 4-conductor/2-pin ground conductor block, internally commoned, green-yellow housing		
PE	**870-1137**	40

Accessories

Appropriate marking system:
Mini-WSB/WMB (see Section 13)

End and intermediate plate, 1 mm thick			
	orange	**870-1149**	100 (4x25)
	gray	**870-1148**	100 (4x25)
Insulation stop, 5 pcs/strip, 0.08 ... 0.2 mm² "s" (0.14 mm² "f-st") ❸			
	white	**280-470**	200 (8x25)
Push-in type jumper bar, insulated, I_N 18 A, light gray			
	2-way	**870-402**	200 (8x25)
	3-way	**870-403**	200 (8x25)
	4-way	**870-404**	100 (4x25)
	5-way	**870-405**	100 (4x25)
	6-way	**870-406**	100 (4x25)
	7-way	**870-407**	100 (4x25)
	8-way	**870-408**	100 (4x25)
	9-way	**870-409**	100 (4x25)
	10-way	**870-410**	50 (2x25)
Push-in type jumper bar, insulated, I_N 18 A, light gray			
	from 1 to 3	**870-433**	200 (8x25)
	from 1 to 4	**870-434**	200 (8x25)
	from 1 to 5	**870-435**	100 (4x25)
	from 1 to 6	**870-436**	100 (4x25)
	from 1 to 7	**870-437**	100 (4x25)
	from 1 to 8	**870-438**	100 (4x25)
	from 1 to 9	**870-439**	100 (4x25)
	from 1 to 10	**870-440**	50 (2x25)
Coding pin, for coding female plugs			
	orange	**769-435**	100 (4x25)
Pin cover, with Mini-WSB marker slot			
	gray	**769-438**	100 (4x25)
	orange	**769-439**	100 (4x25)
1-conductor female plug, angled			
	gray	**769-101/022-000**	200
1-conductor female plug, straight ❹			
	gray	**769-101**	200

Overview of certification organizations, see page 654

X-COM®-SYSTEM
2-Pin/2-Pin Double-Deck Carrier Terminal Blocks
2.5 (4 "f-st") mm², 870 Series

500 V/6 kV/3 ❶ **I_N 16 A** **Terminal block width 5 mm / 0.197 inch**	**Terminal block width 5 mm / 0.197 inch**

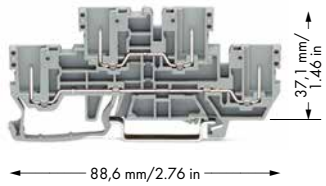

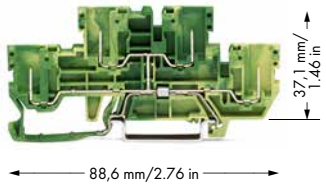

❶ 500 V = rated voltage
6 kV = rated surge voltage
3 = pollution degree
(see Section 14)

❷ 2-conductor female plugs cannot be used.

6

	Item No.	Pack. Unit
2-pin/2-pin double-deck carrier terminal block, through/through terminal block, gray housing		
L/L	**870-151**	50

	Item No.	Pack. Unit
4-pin double-deck carrier terminal block, 4-pin ground conductor terminal block, internally commoned, green-yellow housing		
PE	**870-157**	50

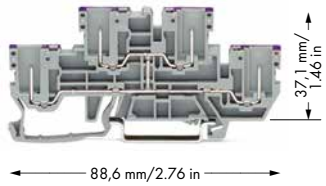

	Item No.	Pack. Unit
4-pin double-deck carrier terminal block, 4-pin through terminal block, internally commoned, violet female plug entry, gray housing		
L	**870-158**	50

Accessories

Appropriate marking system:
Mini-WSB/WMB (see Section 13)

End and intermediate plate, 1 mm thick



orange	**870-169**	100 (4x25)
gray	**870-168**	100 (4x25)

Push-in type jumper bar, insulated, I_N 18 A, light gray



2-way	**870-402**	200 (8x25)
3-way	**870-403**	200 (8x25)
4-way	**870-404**	100 (4x25)
5-way	**870-405**	100 (4x25)
6-way	**870-406**	100 (4x25)
7-way	**870-407**	100 (4x25)
8-way	**870-408**	100 (4x25)
9-way	**870-409**	100 (4x25)
10-way	**870-410**	50 (2x25)

Push-in type jumper bar, insulated, I_N 18 A, light gray



from 1 to 3	**870-433**	200 (8x25)
from 1 to 4	**870-434**	200 (8x25)
from 1 to 5	**870-435**	100 (4x25)
from 1 to 6	**870-436**	100 (4x25)
from 1 to 7	**870-437**	100 (4x25)
from 1 to 8	**870-438**	100 (4x25)
from 1 to 9	**870-439**	100 (4x25)
from 1 to 10	**870-440**	50 (2x25)

Coding pin, for coding female plugs



orange	**769-435**	100 (4x25)

Pin cover, with Mini-WSB marker slot



gray	**769-438**	100 (4x25)
orange	**769-439**	100 (4x25)

1-conductor female plug, straight

❷



gray	**769-101**	200

1-conductor female plug, angled



gray	**769-101/022-000**	200

Mini-WSB Quick marking system, white, 10 strips with 10 markers per card, 5 mm wide markers



plain	**248-501**	5

Overview of certification organizations, see page 654

X-COM®-SYSTEM
2-Pin/2-Pin Double-Deck Carrier Terminal Blocks
Types of Assembly



1-connector female plug, straight
Double-deck carrier terminal blocks can be commoned via 870 Series Push-In Type Jumper Bars. Notice: 2-conductor female plugs cannot be used.

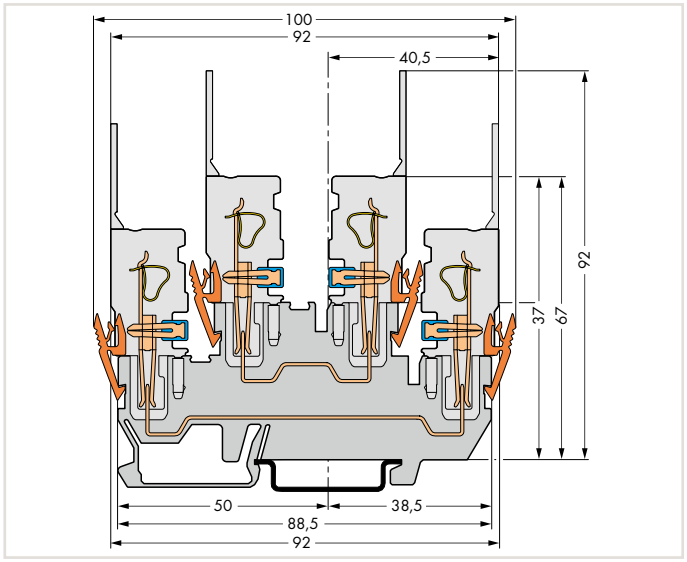

Carrier terminal block

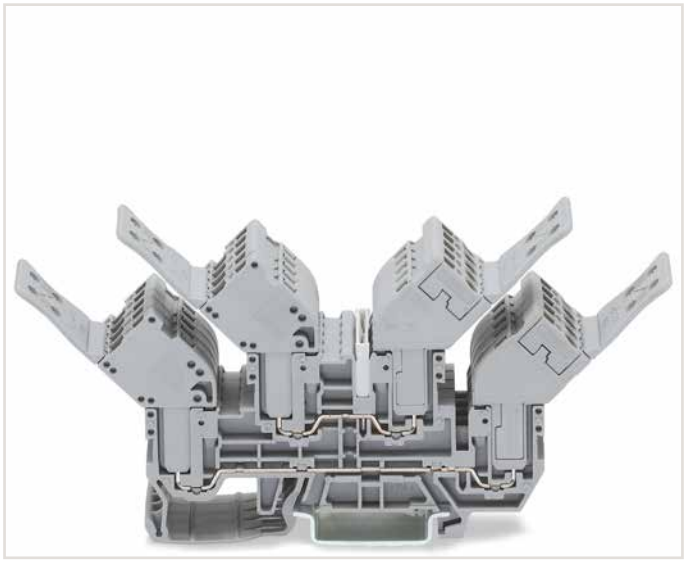

1-conductor female plug, angled
Double-deck carrier terminal blocks can be commoned via 870 Series Push-In Type Jumper Bars.

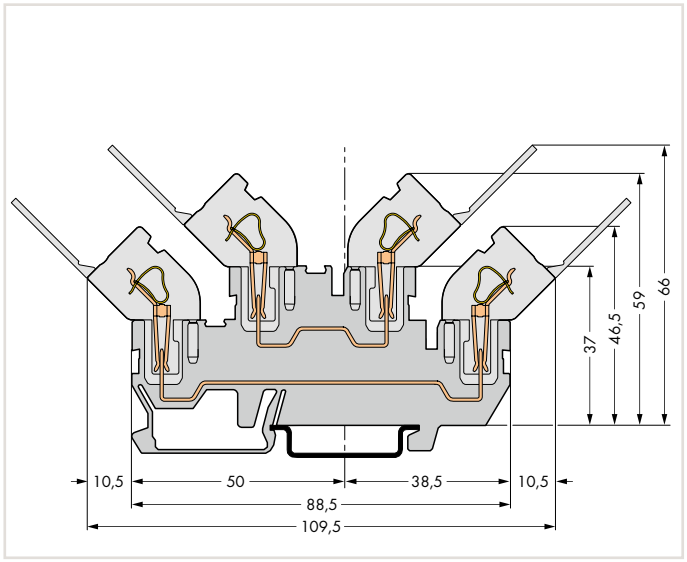

Carrier terminal block

6

CAGE CLAMP®

X-COM®-SYSTEM
2-Conductor/2-Pin Double-Deck Carrier Terminal Blocks
2.5 (4 "f-st") mm², 870 Series

0.08 ... 2.5 (4"f-st")mm² ❶ | 28 ... 12 AWG 500 V/6 kV/3 ❷ I_N 16 A Terminal block width 5 mm / 0.197 inch 6 ... 7 mm / 0.24 ... 0.28 inch	0.08 ... 2.5 (4"f-st")mm² ❶ | 28 ... 12 AWG Terminal block width 5 mm / 0.197 inch 6 ... 7 mm / 0.24 ... 0.28 inch

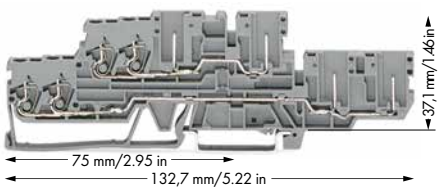

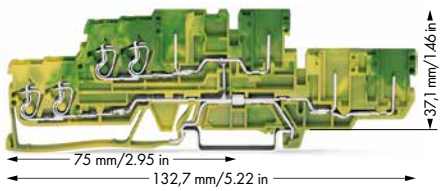

❶ Max. insulation diameter: 4.4 mm

❷ 500 V = rated voltage
6 kV = rated surge voltage
3 = pollution degree
(see Section 14)

❸ See application notes for:
Insulation stop, page 331

❹ **Notice:** Female plugs must be opposing on the upper deck. 2-conductor female plugs and angled 1-conductor female plugs cannot be used.

6

	Item No.	Pack. Unit
2-conductor/2-pin double-deck carrier terminal block, through/through terminal block, gray housing		
L/L	**870-131**	40

	Item No.	Pack. Unit
4-conductor/4-pin double-deck carrier terminal block, 4-conductor/4-pin ground conductor terminal block, internally commoned, green-yellow housing		
PE	**870-137**	40

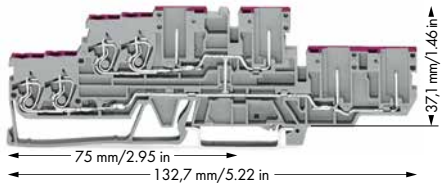

	Item No.	Pack. Unit
4-conductor/4-pin double-deck carrier terminal block, 4-conductor/4-pin through terminal block, internally commoned, violet conductor entry, gray housing		
L	**870-138**	40

Accessories

Appropriate marking system:
Mini-WSB/WMB (see Section 13)

End and intermediate plate, 1 mm thick



orange	**870-149**	100 (4x25)
gray	**870-148**	100 (4x25)

Insulation stop, 5 pcs/strip, 0.08 ... 0.2 mm² "s" (0.14 mm² "f-st") ❸



white	**280-470**	200 (8x25)

Push-in type jumper bar, insulated, I_N 18 A, light gray



2-way	**870-402**	200 (8x25)
3-way	**870-403**	200 (8x25)
4-way	**870-404**	100 (4x25)
5-way	**870-405**	100 (4x25)
6-way	**870-406**	100 (4x25)
7-way	**870-407**	100 (4x25)
8-way	**870-408**	100 (4x25)
9-way	**870-409**	100 (4x25)
10-way	**870-410**	50 (2x25)

Push-in type jumper bar, insulated, I_N 18 A, light gray



from 1 to 3	**870-433**	200 (8x25)
from 1 to 4	**870-434**	200 (8x25)
from 1 to 5	**870-435**	100 (4x25)
from 1 to 6	**870-436**	100 (4x25)
from 1 to 7	**870-437**	100 (4x25)
from 1 to 8	**870-438**	100 (4x25)
from 1 to 9	**870-439**	100 (4x25)
from 1 to 10	**870-440**	50 (2x25)

Coding pin, for coding female plugs



orange	**769-435**	100 (4x25)

Protective warning marker, with black high-voltage symbol, for 5 terminal blocks



yellow	**280-405**	100 (4x25)

Pin cover, with Mini-WSB marker slot



gray	**769-438**	100 (4x25)
orange	**769-439**	100 (4x25)

1-conductor female plug, straight ❹



gray	**769-101**	200

Overview of certification organizations, see page 654

CAGE CLAMP®

X-COM®-SYSTEM – 2-Conductor/2-Pin Double-Deck Carrier Terminal Blocks and 1-Conductor Female Plugs

Types of Assembly

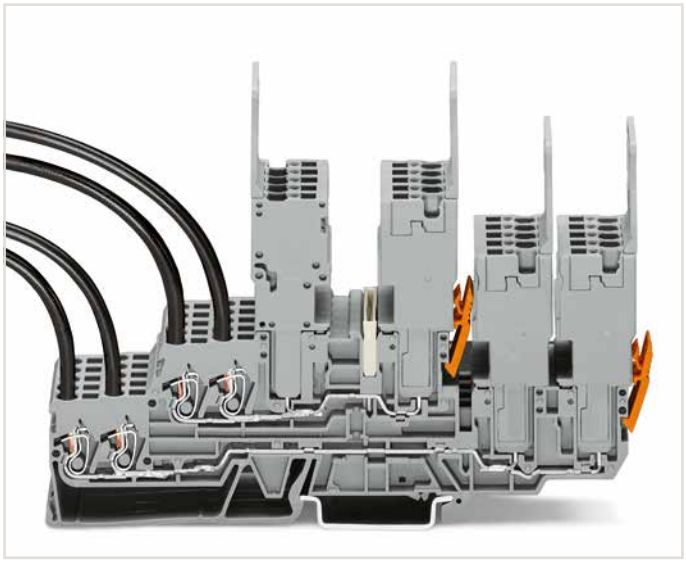

1-connector female plug, straight
Double-deck carrier terminal blocks can be commoned via 870 Series Push-In Type Jumper Bars.
Notice: Female plugs must be opposing on the upper deck (see above). Angled 1-conductor female plugs and 2-conductor female plugs cannot be used.

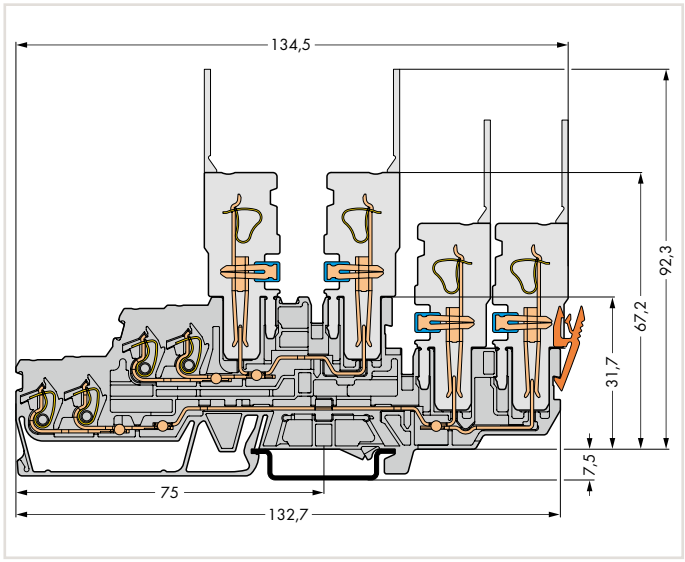

Carrier terminal block

X-COM®-SYSTEM
Male Connectors/Headers and Female Plugs, 769 Series
Description and Installation



Male connector with CAGE CLAMP® connection
1-connector female plug, straight

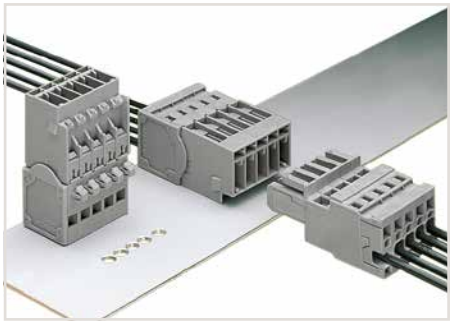

Male connector with CAGE CLAMP® connection and snap-in mounting feet
1-connector female plug, straight

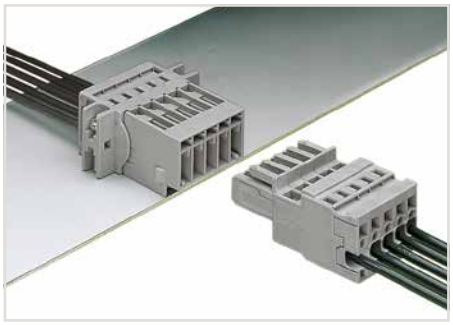

Male connector with CAGE CLAMP® and mounting flanges
1-connector female plug, straight



Insert male connector with snap-in flanges (769-604/005-000) into the cutout.



Male connector with snap-in flanges
Snap-in mounting without tools





Operating tool
Inserting a conductor via operating tool – side-entry wiring (example shows a female plug).
With ferruled conductors, it is necessary to use a terminal block one size smaller than the conductor's nominal cross section.



Operating tool
Inserting a conductor via operating tool (example shows a male connector).

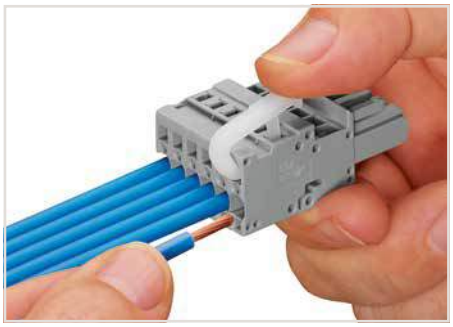

Operating lever
Inserting a conductor via operating tool – side-entry wiring (example shows a female plug).



Strain relief plates can be snapped into both male connector and female plug.

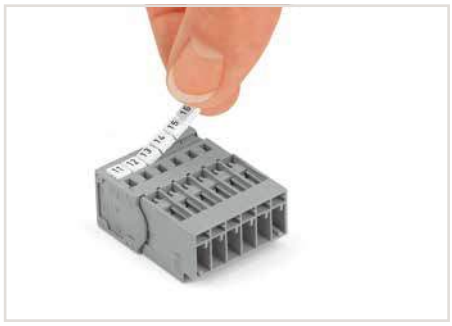

Labeling a male connector with CAGE CLAMP® connection via Mini-WSB quick markers.



Labeling a female plug with CAGE CLAMP® connection via Mini-WSB quick markers.



CAGE CLAMP® terminates the following copper conductors:
solid



stranded



fine-stranded, also with tinned single strands

For aluminum conductors, see notes in Section 14. When using ferrules, the max. conductor cross section accommodated is one size smaller than max. rating of terminal block.



Coding a female plug by removing coding finger(s) via cutting tool. Do not remove the first and last coding fingers or use an additional locking lever.

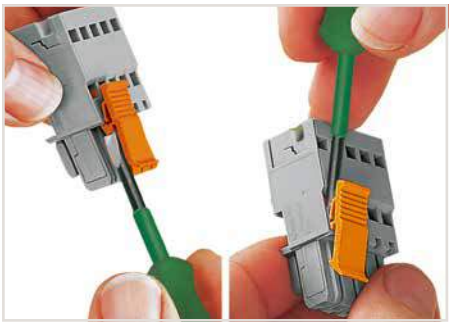

Locking/releasing a lever.



Commoning 1-conductor female plugs via miniature adjacent jumpers.

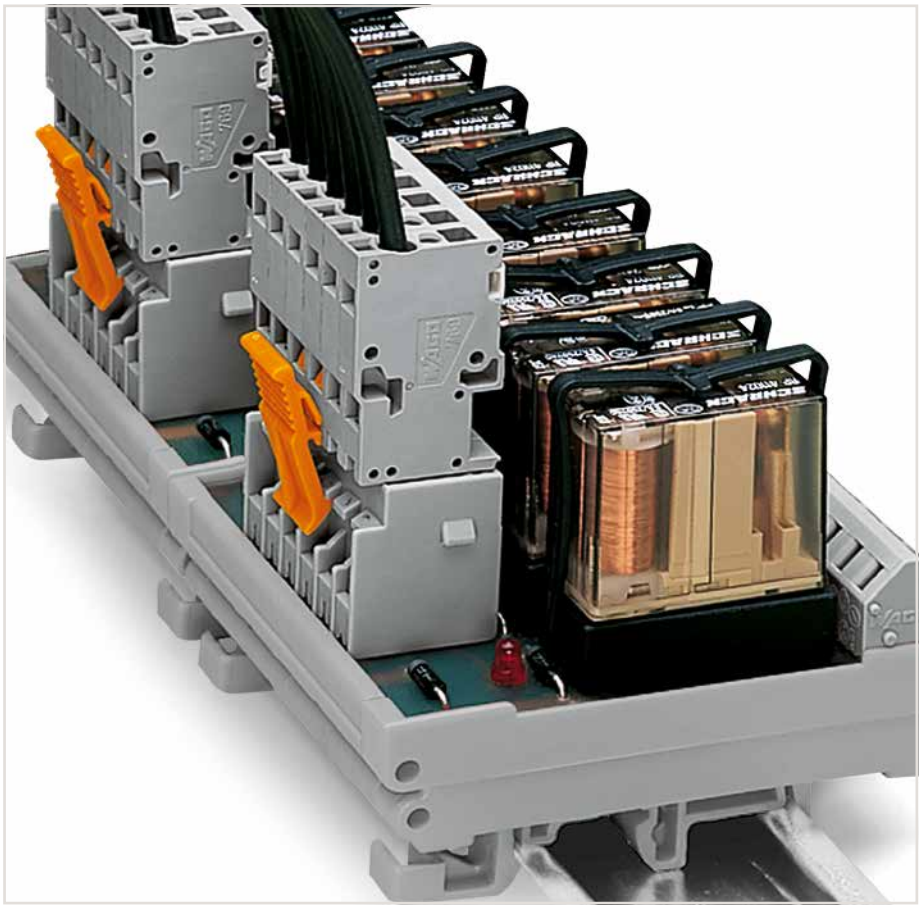

Note: Female plugs used according to the regulations shall not be connected/disconnected when live or under load.

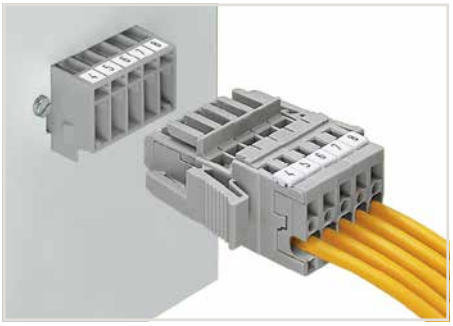

Male header and 1-conductor female plug with lateral locking levers

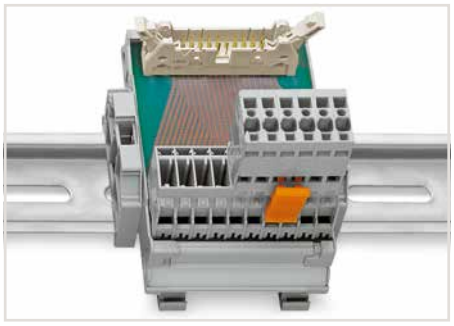

Male headers with solder pins for printed circuit boards

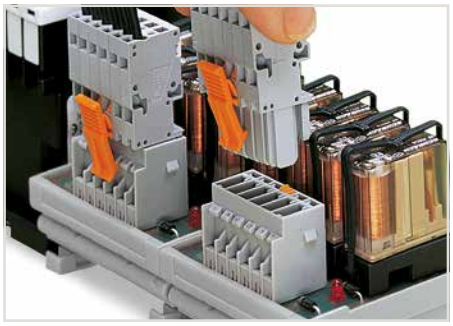

Pluggable PCB connection
Connection to a relay module inside the switchgear cabinet

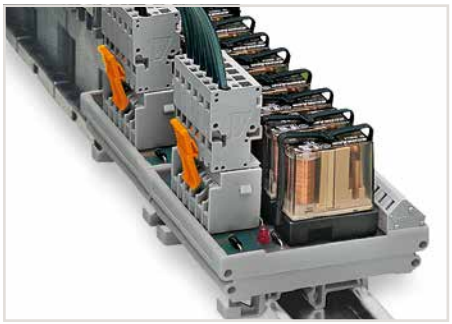

Male headers with straight solder pins and 1-conductor female plugs (picture shows a relay module)

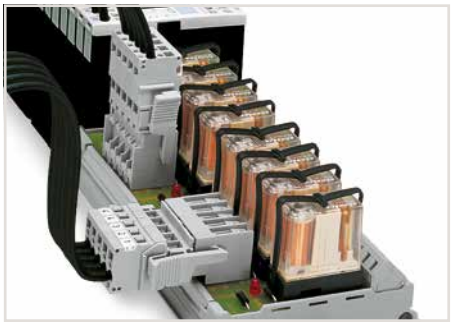

Male headers with solder pins:
Integrating PCB components into the system wiring.



fine-stranded,
tip-bonded



fine-stranded,
with ferrule
(gastight crimped)



fine-stranded,
with pin terminal
(gastight crimped)

X-COM®-SYSTEM
Male Connectors with CAGE CLAMP® Connection, 5 mm Pin Spacing
4 mm², 769 Series

Pin spacing 5 mm / 0.197 inch, gray		Pin spacing 5 mm / 0.197 inch, gray		Pin spacing 5 mm / 0.197 inch, gray	
0.08 ... 4 mm²	28 ... 12 AWG	0.08 ... 4 mm²	28 ... 12 AWG	0.08 ... 4 mm²	28 ... 12 AWG
500 V/6 kV/3 ❶	300 V, 20 A	500 V/6 kV/3 ❶	300 V, 20 A	500 V/6 kV/3 ❶	300 V, 20 A
I_N 32 A ❷	300 V, 20 A	I_N 32 A ❷	300 V, 20 A	I_N 32 A ❷	300 V, 20 A
8 ... 9 mm / 0.31 ... 0.35 inch		8 ... 9 mm / 0.31 ... 0.35 inch		8 ... 9 mm / 0.31 ... 0.35 inch	







6

Pole No.	Item No.	Pack. Unit
Male connector, with CAGE CLAMP® connection, for flying leads, gray		
2	**769-602**	100
3	**769-603**	100
4	**769-604**	100
5	**769-605**	50
6	**769-606**	50
7	**769-607**	25
8	**769-608**	25
9	**769-609**	25
10	**769-610**	25
11	**769-611**	25
12	**769-612**	25
13	**769-613**	25
14	**769-614**	15
15	**769-615**	10

Item-Specific Accessories

Strain relief plate, gray



2- ... 3-pole	**769-411**	100 (4x25)
4- ... 5-pole	**769-412**	100 (4x25)
6- ... 9-pole	**769-413**	100 (4x25)
10- ... 15-pole	**769-414**	100 (4x25)

Pole No.	Item No.	Pack. Unit
Male connector, with CAGE CLAMP® connection and snap-in mounting feet, for 0.6 ... 1.2 mm plate thickness, 3.5 mm Ø mounting holes, with mounting adapter (209-137) for DIN-35 rail, gray		
2	**769-602/001-000**	100
3	**769-603/001-000**	100
4	**769-604/001-000**	50
5	**769-605/001-000**	50
6	**769-606/001-000**	50
7	**769-607/001-000**	25
8	**769-608/001-000**	25
9	**769-609/001-000**	25
10	**769-610/001-000**	25
11	**769-611/001-000**	25
12	**769-612/001-000**	25
13	**769-613/001-000**	15
14	**769-614/001-000**	15
15	**769-615/001-000**	20

Item-Specific Accessories

Mounting adapter, for DIN-35 rail, can be used as end plate, 6.5 mm wide



gray	**209-137**	25

Pole No.	Item No.	Pack. Unit
Male connector, with CAGE CLAMP® connection and mounting flanges, for screw or similar mounting types, for vertical or horizontal mounting, gray		
2	**769-602/002-000**	100
3	**769-603/002-000**	50
4	**769-604/002-000**	50
5	**769-605/002-000**	50
6	**769-606/002-000**	50
7	**769-607/002-000**	25
8	**769-608/002-000**	25
9	**769-609/002-000**	25
10	**769-610/002-000**	25
11	**769-611/002-000**	25
12	**769-612/002-000**	25
13	**769-613/002-000**	15
14	**769-614/002-000**	10
15	**769-615/002-000**	20

Item-Specific Accessories

Mounting screw (M2.5 x 16), and hexagon nut (M2.5)



	769-499	100 (4x25)

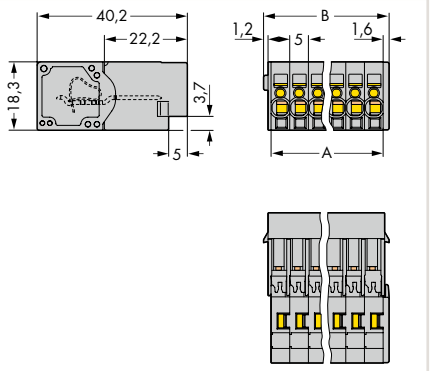

B = A + 3.6 mm
A = pole no. x pin spacing

Dimensions in mm

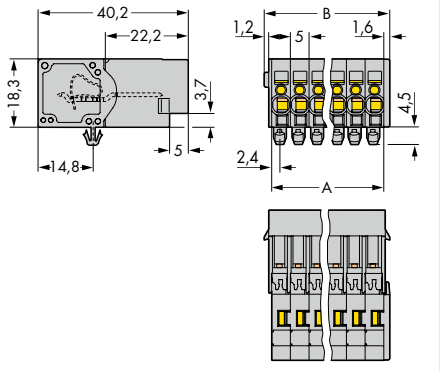

B = A + 3.6 mm
A = pole no. x pin spacing

Dimensions in mm

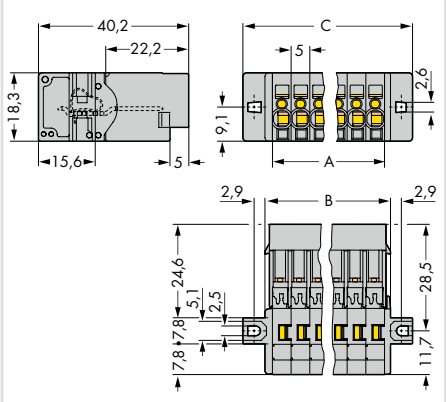

C = A + 15.4 mm
B = A + 3.6 mm
A = pole no. x pin spacing

Dimensions in mm

Overview of certification organizations, see page 654

Pin spacing 5 mm / 0.197 inch, gray

0.08 … 4 mm²	28 … 12 AWG
500 V/6 kV/3 ❶	300 V, 20 A
I_N 32 A ❷	300 V, 20 A
8 … 9 mm / 0.31 … 0.35 inch	



❶ 500 V = rated voltage
6 kV = rated surge voltage
3 = pollution degree
(see Section 14)

❷ Current-carrying capacity curves, see page 403 and upon request

Pole No.	Item No.	Pack. Unit
Male connector, with CAGE CLAMP® connection and feedthrough flanges, for screw or similar mounting types, for vertical or horizontal mounting, gray		
2	**769-602/004-000**	100
3	**769-603/004-000**	50
4	**769-604/004-000**	25
5	**769-605/004-000**	25
6	**769-606/004-000**	25
7	**769-607/004-000**	25
8	**769-608/004-000**	25
9	**769-609/004-000**	25
10	**769-610/004-000**	25
11	**769-611/004-000**	25
12	**769-612/004-000**	15
13	**769-613/004-000**	15
14	**769-614/004-000**	10
15	**769-615/004-000**	10



Male connector with CAGE CLAMP® connection
1-connector female plug, straight

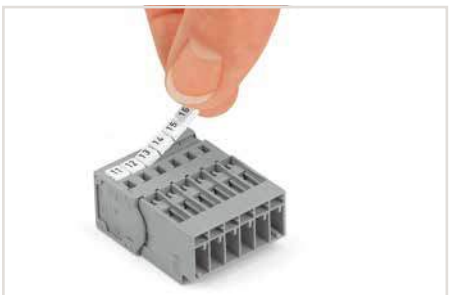

Labeling a male connector with CAGE CLAMP® connection via Mini-WSB quick markers.

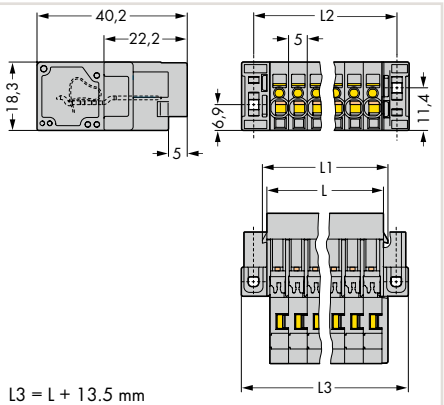

L3 = L + 13.5 mm
L2 = L + 7 mm
L1 = L + 2.4 mm
L = (pole no. - 1) x pin spacing + 6.2 mm

Dimensions in mm

769 Series Accessories

Appropriate marking system:
Mini-WSB/Mini-WSB Inline (see Section 13)

1-conductor female plug, straight			
	gray	**769-102**	100
1-conductor female plug, with lateral locking levers			
	gray	**769-102/021-000**	50
2-conductor female plug			
	gray	**769-122**	50
Coding pin, for coding female plugs			
	orange	**769-435**	100 (4x25)
Operating tool, for female and male connectors with CAGE CLAMP® connection			
		**210-490**	1
Mini-WSB Quick marking system, white, 10 strips with 10 markers per card, 5 mm wide markers			
	plain	**248-501**	5
Operating lever, loose, for male and female connectors with CAGE CLAMP® connection			
		**769-434**	2000 (20x100)

6

CAGE CLAMP®

X-COM®-SYSTEM – Male Connectors with CAGE CLAMP® Connection and Snap-In Flanges, 5 mm Pin Spacing

4 mm², 769 Series

Pin spacing 5 mm / 0.197 inch, gray	
0.08 … 4 mm²	**28 … 12 AWG**
500 V/6 kV/3 ❶	**300 V, 20 A**
I_N 32 A ❷	**300 V, 20 A**
8 … 9 mm / 0.31 … 0.35 inch	



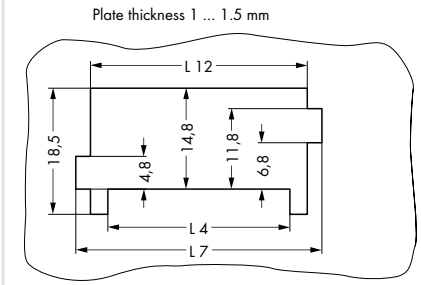

L12 = pole no. x pin spacing + 6.8 mm
L4 = pole no. x pin spacing + 1.7 mm
L7 = L4 + 9.4 mm

Sheet metal cutout
Male connectors with CAGE CLAMP® connection (769-6xx/005-000) and snap-in flanges

❶ 500 V = rated voltage
6 kV = rated surge voltage
3 = pollution degree
(see Section 14)

❷ Current-carrying capacity curves upon request

6

Pole No.	Item No.	Pack. Unit
Male connector, with CAGE CLAMP® connection and snap-in flanges, for tool-free mounting, gray		
2	**769-602/005-000**	50
3	**769-603/005-000**	25
4	**769-604/005-000**	25
5	**769-605/005-000**	25
6	**769-606/005-000**	25
7	**769-607/005-000**	25
8	**769-608/005-000**	20
9	**769-609/005-000**	20
10	**769-610/005-000**	20
11	**769-611/005-000**	15
12	**769-612/005-000**	15
13	**769-613/005-000**	15
14	**769-614/005-000**	10
15	**769-615/005-000**	10



Insert male connector with snap-in flanges (769-604/005-000) into the cutout.



Male connector with snap-in flanges
Snap-in mounting without tools

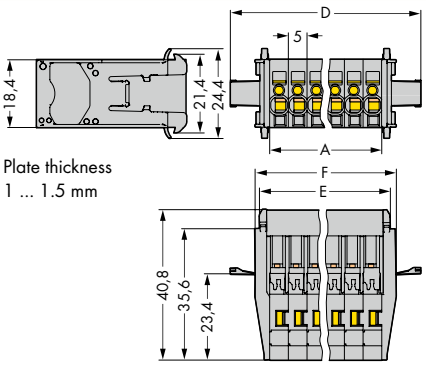

Plate thickness
1 … 1.5 mm

F = A + 8.1 mm
E = A + 4.9 mm
D = A + 21.3 mm
A = pole no. x pin spacing

Dimensions in mm

769 Series Accessories

Appropriate marking system:
Mini-WSB/Mini-WSB Inline (see Section 13)

1-conductor female plug, straight			
	gray	**769-102**	100
1-conductor female plug, with lateral locking levers			
	gray	**769-102/021-000**	50
2-conductor female plug			
	gray	**769-122**	50
Coding pin, for coding female plugs			
	orange	**769-435**	100 (4x25)
Operating tool, for female and male connectors with CAGE CLAMP® connection			
		**210-490**	1
Mini-WSB Quick marking system, white, 10 strips with 10 markers per card, 5 mm wide markers			
	plain	**248-501**	5
Operating lever, loose, for male and female connectors with CAGE CLAMP® connection			
		**769-434**	2000 (20x100)

Overview of certification organizations, see page 654

CAGE CLAMP®

X-COM®-SYSTEM – Male Connectors with CAGE CLAMP® Connection and Snap-In Flanges, 5 mm Pin Spacing

4 mm², 769 Series

Pin spacing 5 mm / 0.197 inch, gray
0.08 … 4 mm² | 28 … 12 AWG
500 V/6 kV/3 ❶
I_N 32 A ❷
8 … 9 mm / 0.31 … 0.35 inch



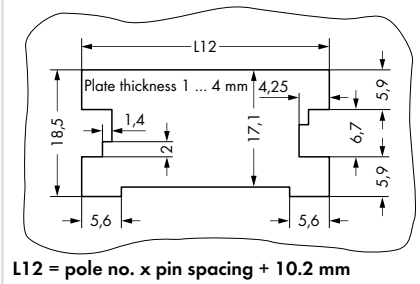

L12 = pole no. x pin spacing + 10.2 mm

Sheet metal cutout (for female plugs without locking levers)
Male connectors with CAGE CLAMP® connection (769-6xx/006-000) and snap-in flanges

❶ 500 V = rated voltage
6 kV = rated surge voltage
3 = pollution degree
(see Section 14)

❷ Current-carrying capacity curves upon request

Pole No.	Item No.	Pack. Unit
Male connector, with CAGE CLAMP® connection and snap-in flanges, for tool-free mounting, gray		
2	**769-602/006-000**	100
3	**769-603/006-000**	100
4	**769-604/006-000**	50
5	**769-605/006-000**	25
6	**769-606/006-000**	25
7	**769-607/006-000**	25
8	**769-608/006-000**	25
9	**769-609/006-000**	20
10	**769-610/006-000**	25
11	**769-611/006-000**	25
12	**769-612/006-000**	25
13	**769-613/006-000**	15
14	**769-614/006-000**	15
15	**769-615/006-000**	10

Accessories see page 382

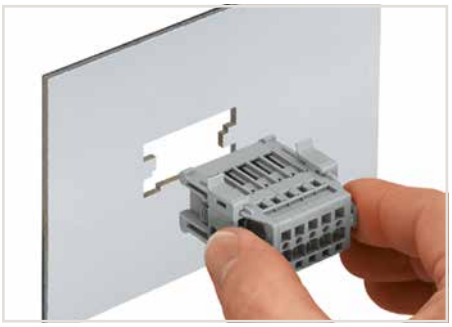

Insert male connector with snap-in flanges (769-605/006-000) into the cutout.

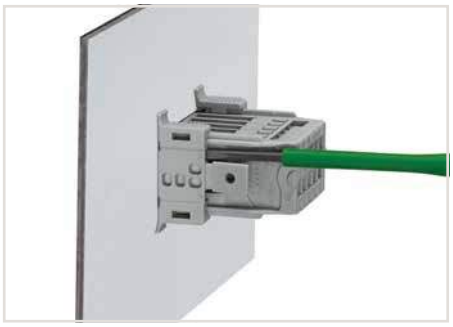

For removal, insert operating tool (2.5 mm blade) into release slot.



Secure the snap-in flange.

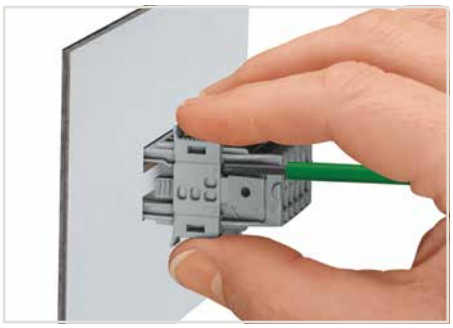

Press center part on both the top and bottom of the connector. Then remove snap-in flange.

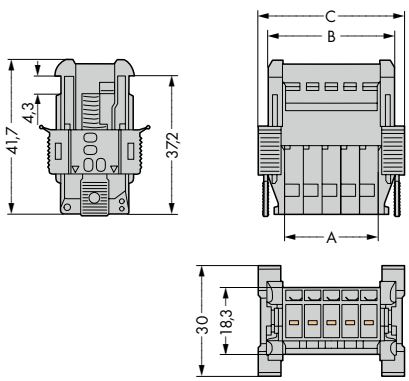

C = A + 14.3 mm
B = A + 9.3 mm
A = pole no. x pin spacing

Dimensions in mm

6

X-COM®-SYSTEM
Male Headers with Solder Pins, 5 mm Pin Spacing
4 mm², 769 Series

Pin spacing 5 mm / 0.197 inch, gray	Pin spacing 5 mm / 0.197 inch, gray
250 V/4 kV/3 ❶ | 300 V, 20 A	250 V/4 kV/3 ❶ | 300 V, 20 A
500 V/4 kV/2 ❶ | 300 V, 20 A	500 V/4 kV/2 ❶ | 300 V, 20 A
I_N 32 A ❷	I_N 32 A ❷





❶ 250 V/500 V = rated voltage
4 kV = rated surge voltage
3/2 = pollution degree
(see Section 14)

❷ Current-carrying capacity curves, see page 402 and upon request

6

Pole No.	Item No.	Pack. Unit
Male header, with straight solder pins, 1 x 1 mm, vertical mating direction to the PCB, gray		
2	**769-632**	200
3	**769-633**	100
4	**769-634**	50
5	**769-635**	50
6	**769-636**	50
7	**769-637**	50
8	**769-638**	25
9	**769-639**	25
10	**769-640**	25
11	**769-641**	25
12	**769-642**	25
13	**769-643**	25
14	**769-644**	25
15	**769-645**	25

Pole No.	Item No.	Pack. Unit
Male header, with angled solder pins, 1 x 1 mm, horizontal mating direction to the PCB, gray		
2	**769-662**	200
3	**769-663**	100
4	**769-664**	50
5	**769-665**	50
6	**769-666**	50
7	**769-667**	50
8	**769-668**	25
9	**769-669**	25
10	**769-670**	25
11	**769-671**	25
12	**769-672**	25
13	**769-673**	25
14	**769-674**	25
15	**769-675**	25

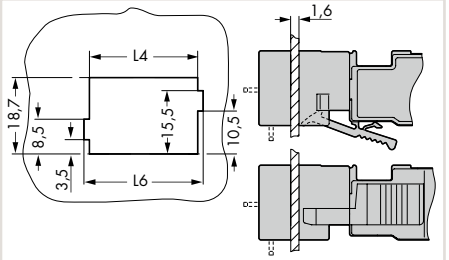

L6 = L4 + 2.6 mm
L4 = pole no. x pin spacing + 1.7 mm

Cutout
Male headers with solder pins

Accessories

1-conductor female plug, straight				1-conductor female plug, with lateral locking levers			
	gray	**769-102**	100		gray	**769-102/021-000**	50
Coding pin, for coding female plugs							
	orange	**769-435**	100 (4x25)				

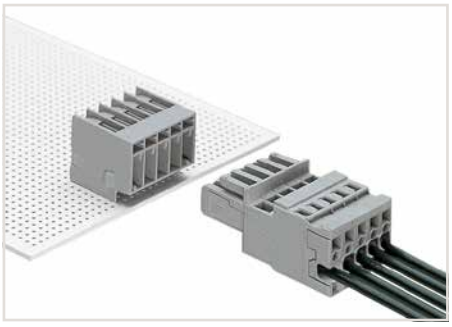

Male header with angled solder pins

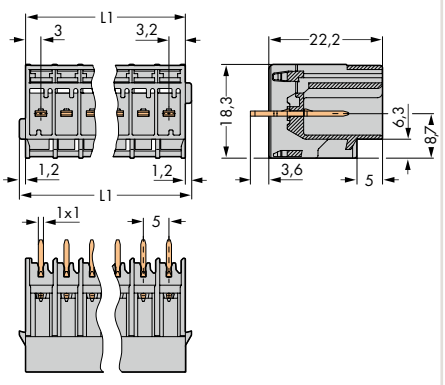

L1 = L + 2.4 mm
L = (pole no. - 1) x pin spacing + 6.2 mm

Dimensions in mm

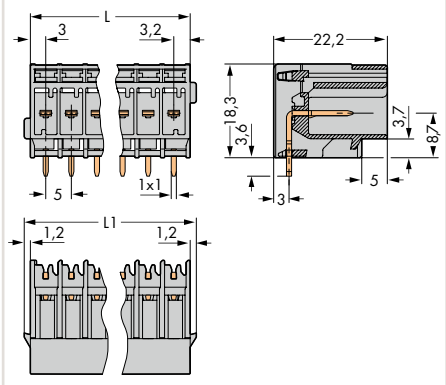

L1 = L + 2.4 mm
L = (pole no. - 1) x pin spacing + 6.2 mm

Dimensions in mm

Overview of certification organizations, see page 654

X-COM®-SYSTEM
Male Headers with Solder Pins and Mounting Flanges, 5 mm Pin Spacing
4 mm², 769 Series

Pin spacing 5 mm / 0.197 inch, gray	Pin spacing 5 mm / 0.197 inch, gray
250 V/4 kV/3 ❶ | 300 V, 20 A	250 V/4 kV/3 ❶ | 300 V, 20 A
500 V/4 kV/2 ❶ | 300 V, 20 A	500 V/4 kV/2 ❶ | 300 V, 20 A
I_N 32 A ❷	I_N 32 A ❷

❶ 250 V/500 V = rated voltage
4 kV = rated surge voltage
3/2 = pollution degree
(see Section 14)

❷ Current-carrying capacity curves, see page 402 and upon request





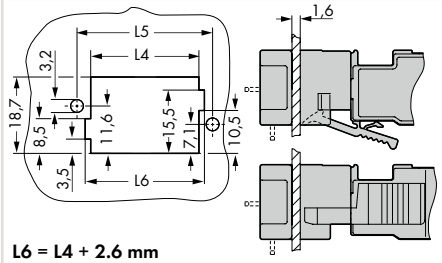

L6 = L4 + 2.6 mm
L5 = L5 + 6.6 mm
L4 = pole no. x pin spacing + 1.7 mm

Cutout
Male headers with solder pins and mounting flanges

Pole No.	Item No.	Pack. Unit
Male header, with straight solder pins and mounting flanges, 1 x 1 mm, vertical mating direction to the PCB, gray		
2	**769-632/003-000**	200
3	**769-633/003-000**	100
4	**769-634/003-000**	50
5	**769-635/003-000**	50
6	**769-636/003-000**	25
7	**769-637/003-000**	25
8	**769-638/003-000**	25
9	**769-639/003-000**	25
10	**769-640/003-000**	25
11	**769-641/003-000**	25
12	**769-642/003-000**	25
13	**769-643/003-000**	15
14	**769-644/003-000**	15
15	**769-645/003-000**	15

Pole No.	Item No.	Pack. Unit
Male header, with angled solder pins and mounting flanges, 1 x 1 mm, horizontal mating direction to the PCB, gray		
2	**769-662/003-000**	100
3	**769-663/003-000**	100
4	**769-664/003-000**	50
5	**769-665/003-000**	50
6	**769-666/003-000**	50
7	**769-667/003-000**	25
8	**769-668/003-000**	25
9	**769-669/003-000**	25
10	**769-670/003-000**	25
11	**769-671/003-000**	25
12	**769-672/003-000**	25
13	**769-673/003-000**	15
14	**769-674/003-000**	15
15	**769-675/003-000**	15

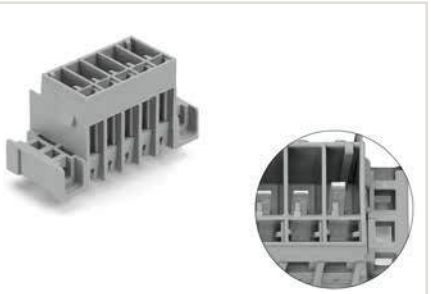

Male headers with preceding ground contact, with straight solder pins and mounting flanges
769-632/003-036
769-633/003-036
769-634/003-036
769-635/003-036
769-636/003-036

Accessories

1-conductor female plug, straight			1-conductor female plug, with lateral locking levers		
gray	**769-102**	100	gray	**769-102/021-000**	50
Coding pin, for coding female plugs					
orange	**769-435**	100 (4x25)			

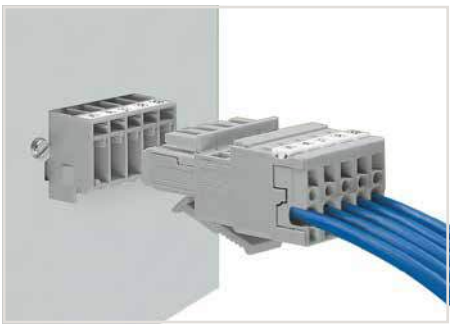

Male header with mounting flanges
1-conductor female plug with bottom-mount locking levers

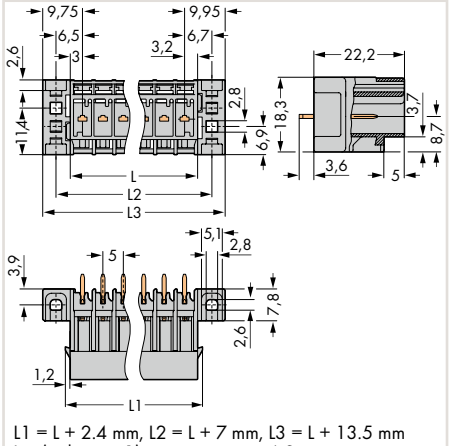

L1 = L + 2.4 mm, L2 = L + 7 mm, L3 = L + 13.5 mm
L = (pole no. - 1) x pin spacing + 6.2 mm

Dimensions in mm

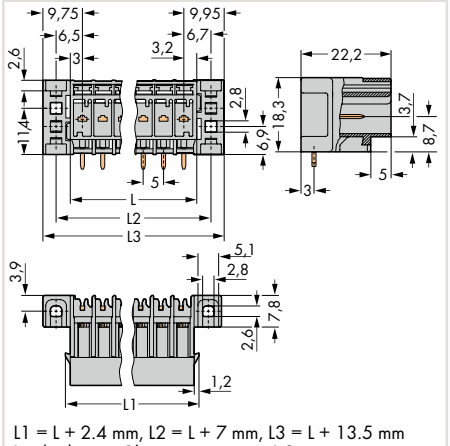

L1 = L + 2.4 mm, L2 = L + 7 mm, L3 = L + 13.5 mm
L = (pole no. - 1) x pin spacing + 6.2 mm

Dimensions in mm

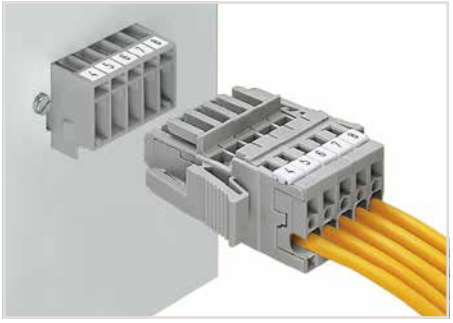

Male header and 1-conductor female plug with lateral locking levers

X-COM®-SYSTEM
Male Headers with Solder Pins and Feedthrough Flanges, 5 mm Pin Spacing
4 mm², 769 Series

Pin spacing 5 mm / 0.197 inch, gray	Pin spacing 5 mm / 0.197 inch, gray
250 V/4 kV/3 ❶ | 300 V, 20 A	250 V/4 kV/3 ❶ | 300 V, 20 A
500 V/4 kV/2 ❶ | 300 V, 20 A	500 V/4 kV/2 ❶ | 300 V, 20 A
I_N 32 A ❷	I_N 32 A ❷





❶ 250 V/500 V = rated voltage
4 kV = rated surge voltage
3/2 = pollution degree
(see Section 14)

❷ Current-carrying capacity curves, see page 402 and upon request

6

Pole No.	Item No.	Pack. Unit	Pole No.	Item No.	Pack. Unit
Male header, with straight solder pins and feedthrough flanges, 1 x 1 mm, vertical mating direction to the PCB, gray			Male header, with angled solder pins and feedthrough flanges, 1 x 1 mm, horizontal mating direction to the PCB, gray		
2	**769-632/004-000**	200	2	**769-662/004-000**	200
3	**769-633/004-000**	50	3	**769-663/004-000**	100
4	**769-634/004-000**	50	4	**769-664/004-000**	50
5	**769-635/004-000**	50	5	**769-665/004-000**	50
6	**769-636/004-000**	50	6	**769-666/004-000**	50
7	**769-637/004-000**	25	7	**769-667/004-000**	50
8	**769-638/004-000**	25	8	**769-668/004-000**	25
9	**769-639/004-000**	25	9	**769-669/004-000**	25
10	**769-640/004-000**	25	10	**769-670/004-000**	25
11	**769-641/004-000**	25	11	**769-671/004-000**	25
12	**769-642/004-000**	25	12	**769-672/004-000**	25
13	**769-643/004-000**	15	13	**769-673/004-000**	25
14	**769-644/004-000**	15	14	**769-674/004-000**	15
15	**769-645/004-000**	15	15	**769-675/004-000**	15

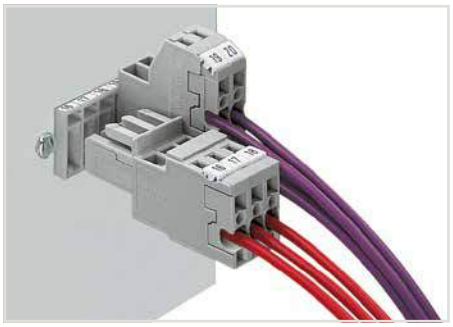

Male header with feedthrough flanges
1-conductor female plug
2-conductor female plug

Accessories

1-conductor female plug, straight				1-conductor female plug, with lateral locking levers			
	gray	**769-102**	100		gray	**769-102/021-000**	50
Coding pin, for coding female plugs							
	orange	**769-435**	100 (4x25)				

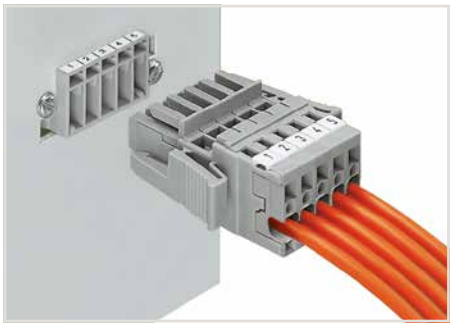

Male header and 1-conductor female plug with lateral locking levers

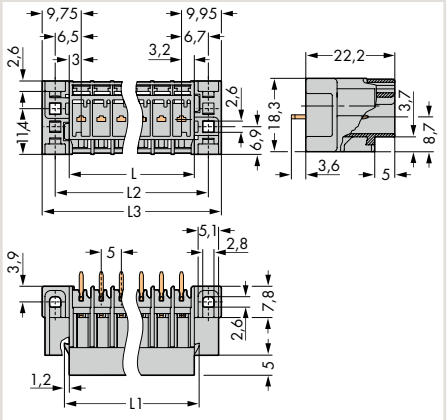

L1 = L + 2.4 mm, L2 = L + 7 mm, L3 = L + 13.5 mm
L = (pole no. - 1) x pin spacing + 6.2 mm

Dimensions in mm

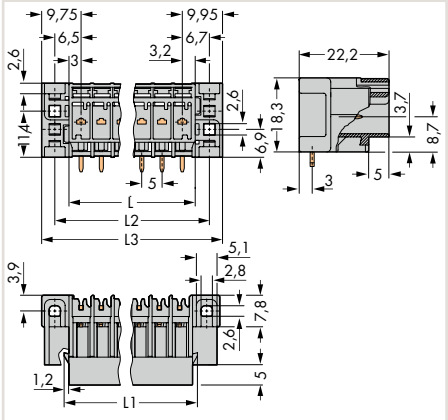

L1 = L + 2.4 mm, L2 = L + 7 mm, L3 = L + 13.5 mm
L = (pole no. - 1) x pin spacing + 6.2 mm

Dimensions in mm

Overview of certification organizations, see page 654

X-COM®-SYSTEM
Male Headers with Solder Pins with 1-/2-Conductor Female Plugs
Types of Assembly

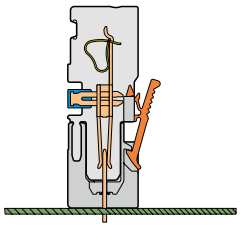

Male header with straight solder pins

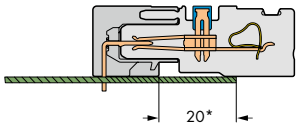

* Maximum dimension when using 1-conductor female plugs

Male header with angled solder pins

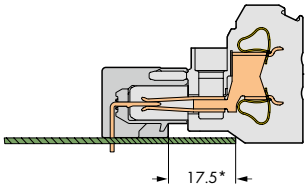

* Maximum dimension when using 2-conductor female plugs

Male header with angled solder pins

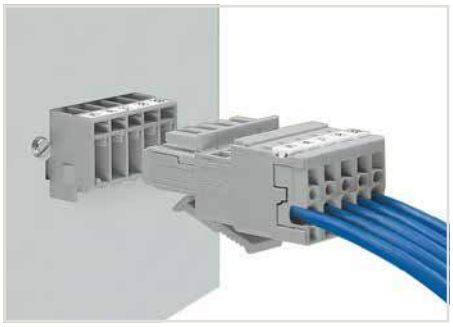

Male header with mounting flanges
1-conductor female plug with bottom-mount locking levers

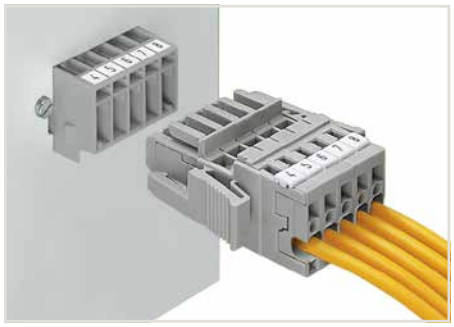

Male header with mounting flanges
1-conductor female plug with lateral locking levers

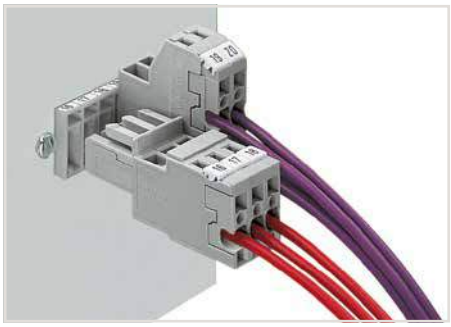

Male header with feedthrough flanges
1-conductor female plug
2-conductor female plug

Cutouts for headers with fixing flanges for feedthrough applications and locking levers

Female plugs with **bottom-mounted** locking levers

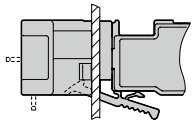

Cutouts for
2-pole locking levers
(2- to 15-pole female plugs)

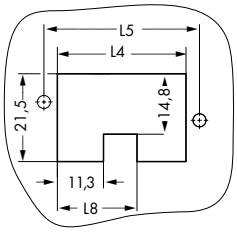

Layout for locking levers outer . . .

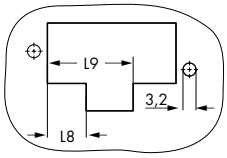

. . . inner

Cutouts for
single pole locking levers

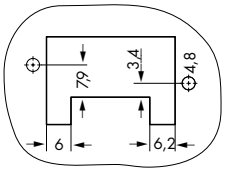

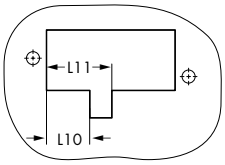

Female plug **without** locking levers

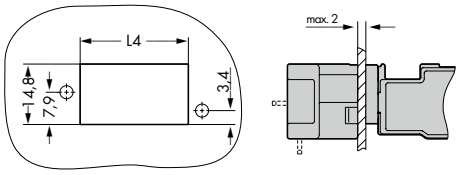

Female plug with **lateral** locking levers

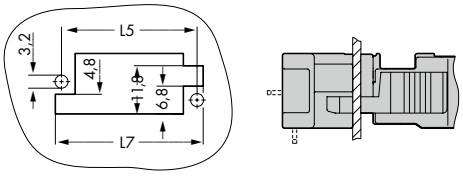

L 4 = pole no. x pin spacing + 1.7 mm
L 5 = L4 + 6.6 mm
L 7 = L4 + 9.4 mm
L 8 = pole no. LL x pin spacing - 0.3 mm
L 9 = L8 + 11.6 mm
L10 = pole no. LL x pin spacing + 0.6 mm
L11 = L10 + 5.4 mm
Pole no. LL: Number of poles ahead of the poles attached to the locking lever
LL = locking lever

X-COM®-SYSTEM
Male Headers with Solder Pins and Rivet Mounting Flanges, 5 mm Pin Spacing
4 mm², 769 Series

Pin spacing 5 mm / 0.197 inch, gray
250 V/4 kV/3 ❶
500 V/4 kV/2 ❶
I_N 32 A ❷



❶ 250 V/500 V = rated voltage
4 kV = rated surge voltage
3/2 = pollution degree
(see Section 14)

❷ Current-carrying capacity curves upon request

6

Pole No.	Item No.	Pack. Unit
Male header, with straight solder pins and rivet mounting flanges, 1 x 1 mm, vertical mating direction to the PCB, gray		
2	**769-632/007-000**	200
3	**769-633/007-000**	50
4	**769-634/007-000**	50
5	**769-635/007-000**	50
6	**769-636/007-000**	50
7	**769-637/007-000**	25
8	**769-638/007-000**	25
9	**769-639/007-000**	25
10	**769-640/007-000**	25
11	**769-641/007-000**	25
12	**769-642/007-000**	25
13	**769-643/007-000**	15
14	**769-644/007-000**	15
15	**769-645/007-000**	15

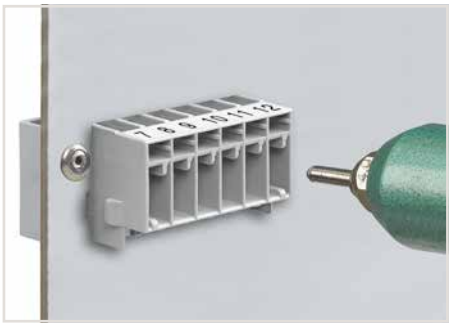

Mounting with 3 mm ∅ blind rivets

Accessories

1-conductor female plug, straight



gray **769-102** 100

1-conductor female plug, with lateral locking levers



gray **769-102/021-000** 50

Coding pin, for coding female plugs



orange **769-435** 100 (4x25)

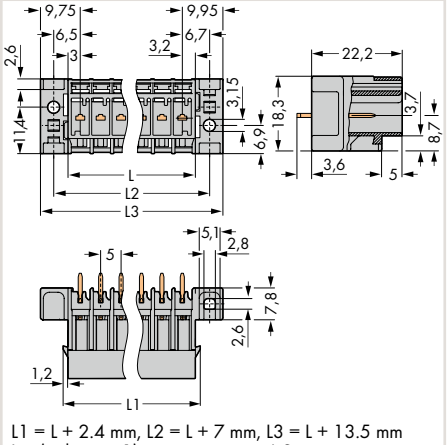

L1 = L + 2.4 mm, L2 = L + 7 mm, L3 = L + 13.5 mm
L = (pole no. - 1) x pin spacing + 6.2 mm

Dimensions in mm

Overview of certification organizations, see page 654

CAGE CLAMP®

X-COM®-SYSTEM
1-Conductor Female Plugs
4 mm², 769 Series

0.08 ... 4 mm²	28 ... 12 AWG
500 V/6 kV/3 ❶	300 V, 20 A
I_N 32 A ❷	300 V, 20 A

Module width 5 mm / 0.197 inch
8 ... 9 mm / 0.31 ... 0.35 inch



❸



Application examples for 1-pole female plug:
- Phase selection in three-phase network
- Test plug with rated current capability
- Simplified circuit expansion – addition of base circuits requires only female plugs to be plugged in

❶ 500 V = rated voltage
6 kV = rated surge voltage
3 = pollution degree
(see Section 14)

❷ Current-carrying capacity curves, see page 400 and upon request

❸ Item no. suffixes
blue .../000-006
green-yellow .../000-016

❹ See page 399

6

Pole No.	Item No.	Pack. Unit
1-conductor female plug, straight, fits into carrier terminal blocks or male connectors, with coding fingers, can be commoned with miniature adjacent jumpers, gray		
1	**769-101**	200
2	**769-102**	100
3	**769-103**	50
4	**769-104**	50
5	**769-105**	50
6	**769-106**	25
7	**769-107**	25
8	**769-108**	25
9	**769-109**	25
10	**769-110**	25
11	**769-111**	20
12	**769-112**	20
13	**769-113**	10
14	**769-114**	10
15	**769-115**	10

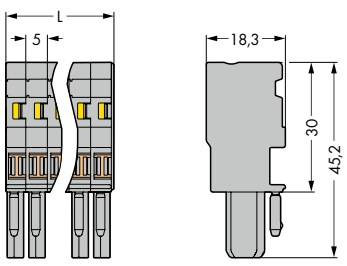

L = pole no. x module width

Dimensions in mm

Accessories

Appropriate marking system:
Mini-WSB/Mini-WSB Inline (see Section 13)

Insulation stop, 5 pcs/strip, 0.08 ... 0.2 mm² "s" (0.14 mm² "f-st")



white	**769-470**	200	(8x25)



light gray	**769-471**	200	(8x25)



dark gray	**769-472**	200	(8x25)

Miniature adjacent jumper, insulated, I_N 24 A



gray	**769-402**	100	(4x25)

Jumper cover, for 1-conductor female plugs, for 5 poles



gray	**769-436**	100	(4x25)

Protective warning marker, with black high-voltage symbol, for 5 terminal blocks



yellow	**280-415**	100	(4x25)

Operating lever, loose, for male and female connectors with CAGE CLAMP®



	769-434	2000	(20x100)

Locking lever, for 1-pole female plugs



gray	**769-428**	100	(4x25)
orange	**769-429**	100	(4x25)

Locking lever, for female plugs with 2 poles and more



orange	**769-431**	100	(4x25)
gray	**769-430**	100	(4x25)

Strain relief plate, gray



1-pole	**769-410**	100	(4x25)
2- ... 3-pole	**769-411**	100	(4x25)
4- ... 5-pole	**769-412**	100	(4x25)

Strain relief plate, gray



6- ... 9-pole	**769-413**	100	(4x25)
10- ... 15-pole	**769-414**	100	(4x25)

Snap-on type strain relief housing, consists of strain relief support and housing ❹



5-pole	**769-1605**	25

Mini-WSB Quick marking system, white, 10 strips with 10 markers per card, 5 mm wide markers



plain	**248-501**	5

Mini-WSB Quick marking system, plain, 10 strips with 10 markers per card, 5 mm wide markers



yellow	**248-501/000-002**	
red	**248-501/000-005**	
blue	**248-501/000-006**	
gray	**248-501/000-007**	
orange	**248-501/000-012**	
light green	**248-501/000-017**	
green	**248-501/000-023**	
violet	**248-501/000-024**	
		5

Overview of certification organizations, see page 654

CAGE CLAMP®

X-COM®-SYSTEM
1-Conductor Female Plugs with Lateral Locking Levers
4 mm², 769 Series

0.08 ... 4 mm²	28 ... 12 AWG
500 V/6 kV/3 ❶	300 V, 20 A
I_N 32 A ❷	300 V, 20 A

Module width 5 mm / 0.197 inch
8 ... 9 mm / 0.31 ... 0.35 inch



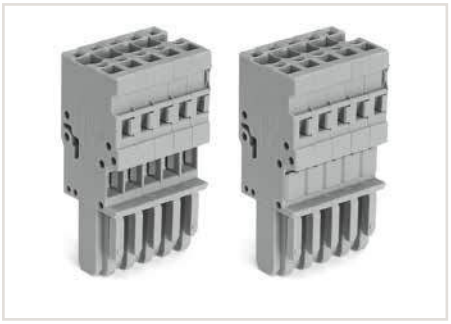

Jumper cover for 1-conductor female plugs

❶ 500 V = rated voltage
6 kV = rated surge voltage
3 = pollution degree
(see Section 14)

❷ Current-carrying capacity curves, see page 400 and upon request

❸ See page 399

Pole No.	Item No.	Pack. Unit
1-conductor female plug, with lateral locking levers, only compatible with male connectors, with coding fingers, can be commoned with miniature adjacent jumpers, gray		
2	**769-102/021-000**	50
3	**769-103/021-000**	25
4	**769-104/021-000**	25
5	**769-105/021-000**	25
6	**769-106/021-000**	25
7	**769-107/021-000**	25
8	**769-108/021-000**	20
9	**769-109/021-000**	20
10	**769-110/021-000**	10
11	**769-111/021-000**	10
12	**769-112/021-000**	10
13	**769-113/021-000**	10
14	**769-114/021-000**	10
15	**769-115/021-000**	10

Accessories

Appropriate marking system:
Mini-WSB/Mini-WSB Inline (see Section 13)

Insulation stop, 5 pcs/strip, 0.08 ... 0.2 mm² "s" (0.14 mm² "f-st")			
	white	**769-470**	200 (8x25)
Insulation stop, 5 pcs/strip, 0.25 ... 0.5 mm²			
	light gray	**769-471**	200 (8x25)
Insulation stop, 5 pcs/strip, 0.75 ... 1 mm²			
	dark gray	**769-472**	200 (8x25)
Miniature adjacent jumper, insulated, I_N 24 A			
	gray	**769-402**	100 (4x25)
Jumper cover, for 1-conductor female plugs, for 5 poles			
	gray	**769-436**	100 (4x25)
Protective warning marker, with black high-voltage symbol, for 5 terminal blocks			
	yellow	**280-415**	100 (4x25)
Operating lever, loose, for male and female connectors with CAGE CLAMP® connection			
		769-434	2000 (20x100)
Test plug, with 500 mm cable, 2 mm Ø, max. 42 V			
	red	**210-136**	50
Test plug, with 500 mm cable, 2.3 mm Ø, max. 42 V			
	yellow	**210-137**	50
Strain relief plate, gray			
	2- ... 3-pole	**769-411**	100 (4x25)
	4- ... 5-pole	**769-412**	100 (4x25)
Strain relief plate, gray			
	6- ... 9-pole	**769-413**	100 (4x25)
	10- ... 15-pole	**769-414**	100 (4x25)
Snap-on type strain relief housing, consists of strain relief support and housing ❸			
	5-pole	**769-1605**	25

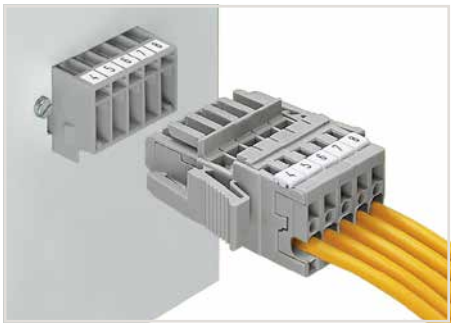

Male header with mounting flanges
1-conductor female plug with lateral locking levers

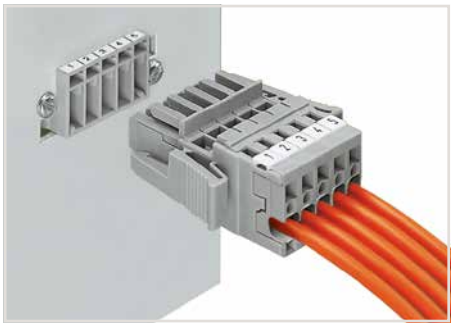

Male header and 1-conductor female plug with lateral locking levers

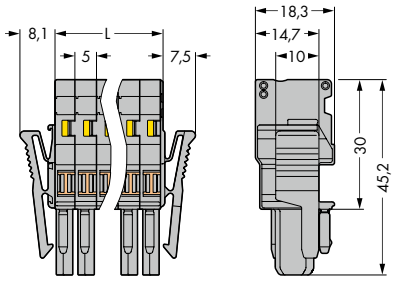

L = pole no. x module width

Dimensions in mm

6

CAGE CLAMP®

X-COM®-SYSTEM
2-Conductor Female Plugs
4 mm², 769 Series

0.08 ... 4 mm²	28 ... 12 AWG
500 V/6 kV/3 ❶	300 V, 20 A
I_N 32 A ❷	300 V, 20 A

Module width 5 mm / 0.197 inch
8 ... 9 mm / 0.31 ... 0.35 inch

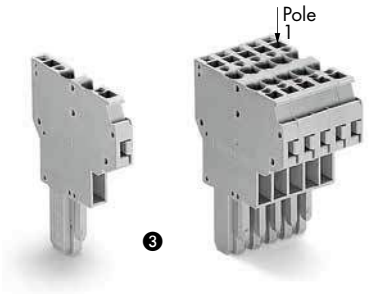

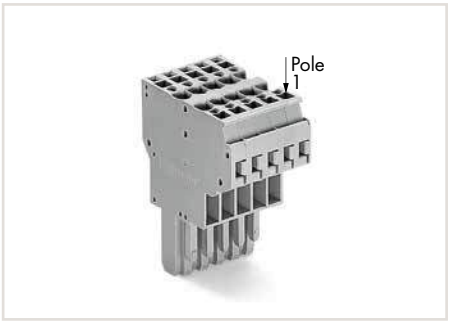

2-conductor female plugs:
- Common signals from one subassembly to the other (bus structure)
- Can be used as a T-wire branch tap connection (e.g. for lighting wiring)
- Enable a higher number of connection possibilities

❶ 500 V = rated voltage
6 kV = rated surge voltage
3 = pollution degree
(see Section 14)

❷ Current-carrying capacity curves upon request

❸ Item no. suffixes
blue **.../000-006**
green-yellow **.../000-016**

❹ See application notes for:
Staggered jumper, page 333

6

Pole No.	Item No.	Pack. Unit
2-conductor female plug, fits into carrier terminal blocks or male connectors, with coding fingers, can be commoned with adjacent and staggered jumpers, gray		
1	**769-121**	100
2	**769-122**	50
3	**769-123**	25
4	**769-124**	25
5	**769-125**	20
6	**769-126**	10
7	**769-127**	10
8	**769-128**	10
9	**769-129**	10
10	**769-130**	10
11	**769-131**	5
12	**769-132**	5
13	**769-133**	5
14	**769-134**	5
15	**769-135**	5

Accessories

Appropriate marking system:
Mini-WSB/Mini-WSB Inline (see Section 13)

Insulation stop, 5 pcs/strip, 0.08 ... 0.2 mm² "s" (0.14 mm² "f-st")			
	white	**769-470**	200 (8x25)
Insulation stop, 5 pcs/strip, 0.25 ... 0.5 mm²			
	light gray	**769-471**	200 (8x25)
Insulation stop, 5 pcs/strip, 0.75 ... 1 mm²			
	dark gray	**769-472**	200 (8x25)
Adjacent jumper, insulated, I_N = I_N terminal block			
	gray	**280-402**	200 (8x25)
Staggered jumper, insulated, Spacing: 5 mm, I_N 24 A ❹			
	from 1 to 2	**780-452**	100 (4x25)
	from 1 to 3	**780-453**	100 (4x25)
	from 1 to 4	**780-454**	100 (4x25)
	from 1 to 5	**780-455**	50 (2x25)
	from 1 to 6	**780-456**	50 (2x25)
	from 1 to 7	**780-457**	50 (2x25)
	from 1 to 8	**780-458**	50 (2x25)
Protective warning marker, with black high-voltage symbol, for 5 terminal blocks			
	yellow	**280-415**	100 (4x25)
Locking lever, for 1-pole female plugs			
	gray	**769-428**	100 (4x25)
	orange	**769-429**	100 (4x25)
Locking lever, for female plugs with 2 poles and more			
	orange	**769-431**	100 (4x25)
	gray	**769-430**	100 (4x25)
Strain relief plate, gray			
	1-pole	**769-410**	100 (4x25)
	2- ... 3-pole	**769-411**	100 (4x25)
	4- ... 5-pole	**769-412**	100 (4x25)
Strain relief plate, gray			
	6- ... 9-pole	**769-413**	100 (4x25)
	10- ... 15-pole	**769-414**	100 (4x25)

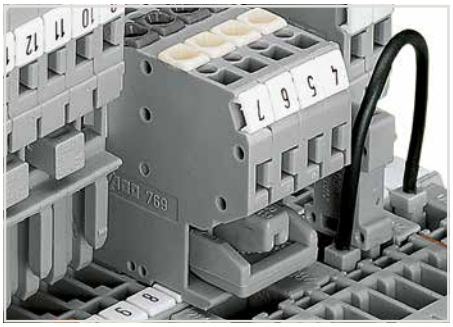

Commoning options of female plugs:
- After removal, commoned potentials still remain commoned
- Use of plug-in jumpers instead of additional wired jumpers
- Can be used as a "hardware" key for safety lockout
- Can also be used as a commoning jumper for sensor circuits or machine programming

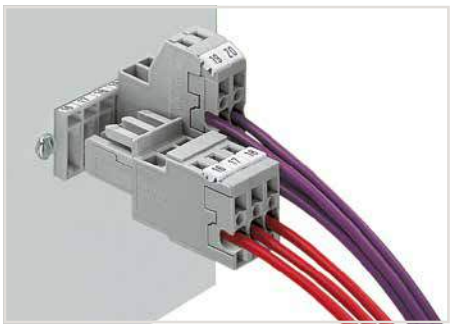

Male header with feedthrough flanges
1-conductor female plug
2-conductor female plug

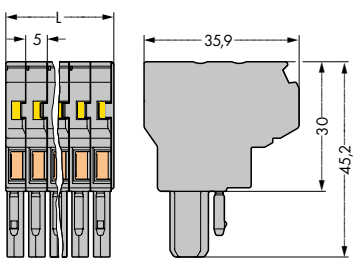

L = pole no. x module width

Dimensions in mm

CAGE CLAMP®

X-COM®-SYSTEM
1-Conductor Female Plugs, Angled
4 mm², 769 Series

0.08 ... 4 mm²	28 ... 12 AWG
500 V/6 kV/3 ❶	300 V, 20 A
I_N 32 A ❷	300 V, 20 A

Module width 5 mm / 0.197 inch
8 ... 9 mm / 0.31 ... 0.35 inch

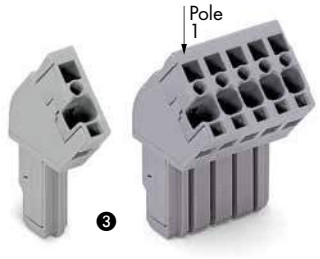

❶ 500 V = rated voltage
6 kV = rated surge voltage
3 = pollution degree
(see Section 14)

❷ Current-carrying capacity curves upon request

❸ Item no. suffixes
blue .../000-006
green-yellow .../000-016

❹ See page 399

Pole No.	Item No.	Pack. Unit
1-conductor female plug, angled, fits into carrier terminal blocks or male connectors, with coding fingers, gray		
1	769-101/022-000	200
2	769-102/022-000	100
3	769-103/022-000	50
4	769-104/022-000	50
5	769-105/022-000	50
6	769-106/022-000	25
7	769-107/022-000	25
8	769-108/022-000	25
9	769-109/022-000	25
10	769-110/022-000	25
11	769-111/022-000	20
12	769-112/022-000	20
13	769-113/022-000	10
14	769-114/022-000	10
15	769-115/022-000	10

Accessories

Appropriate marking system:
Mini-WSB/Mini-WSB Inline (see Section 13)

Insulation stop, 5 pcs/strip, 0.08 ... 0.2 mm² "s" (0.14 mm² "f-st")			
	white	769-470	200 (8x25)
Insulation stop, 5 pcs/strip, 0.25 ... 0.5 mm²			
	light gray	769-471	200 (8x25)
Insulation stop, 5 pcs/strip, 0.75 ... 1 mm²			
	dark gray	769-472	200 (8x25)
Protective warning marker, with black high-voltage symbol, for 5 terminal blocks			
	yellow	280-415	100 (4x25)
Operating lever, loose, for male and female connectors with CAGE CLAMP® connection		769-434	2000 (20x100)
Test plug, with 500 mm cable, 2 mm Ø, max. 42 V			
	red	210-136	50
Test plug, with 500 mm cable, 2.3 mm Ø, max. 42 V			
	yellow	210-137	50
Strain relief plate, gray			
	1-pole	769-410	100 (4x25)
	2- ... 3-pole	769-411	100 (4x25)
	4- ... 5-pole	769-412	100 (4x25)
Strain relief plate, gray			
	6- ... 9-pole	769-413	100 (4x25)
	10- ... 15-pole	769-414	100 (4x25)
Snap-on type strain relief housing, consists of strain relief support and housing ❹			
	5-pole	769-1605	25
Mini-WSB Quick marking system, white, 10 strips with 10 markers per card, 5 mm wide markers			
	plain	248-501	5

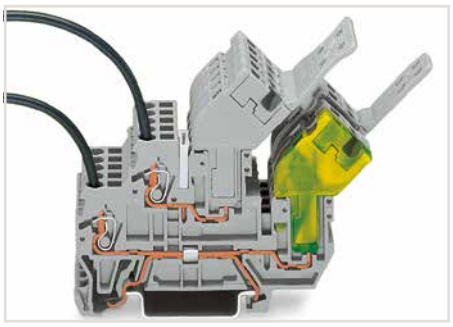

Angled female plugs provide reduced installation height.

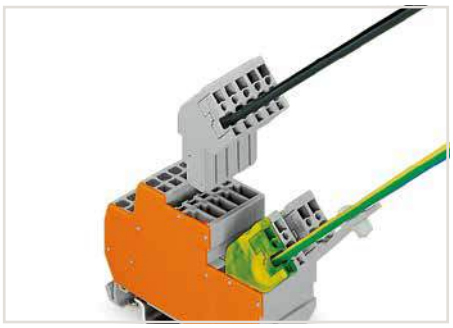

1-conductor/1-pin, double-deck carrier terminal block
1-conductor female plug, angled*
*1-conductor straight female plug is also possible!

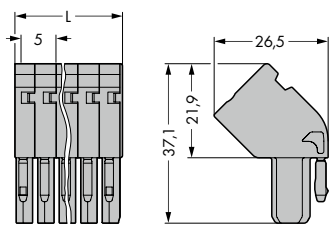

L = pole no. x module width

Dimensions in mm

X-COM®-SYSTEM
Female Plugs for Self-Assembly
4 mm², 769 Series

0.08 … 4 mm² | 28 … 12 AWG 500 V/6 kV/3 ❶ I_N 32 A ❷ Terminal block width 5 mm / 0.197 inch 8 … 9 mm / 0.31 … 0.35 inch	0.08 … 4 mm² | 28 … 12 AWG 500 V/6 kV/3 ❶ I_N 32 A ❷ Terminal block width 5 mm / 0.197 inch 8 … 9 mm / 0.31 … 0.35 inch	0.08 … 4 mm² | 28 … 12 AWG 500 V/6 kV/3 ❶ I_N 32 A ❷ Terminal block width 5 mm / 0.197 inch 8 … 9 mm / 0.31 … 0.35 inch



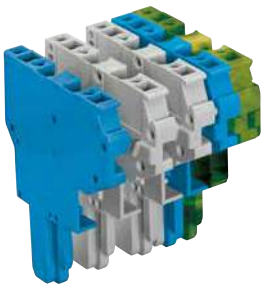



6

	Item No.	Pack. Unit
1-conductor end module, with coding fingers, can be commoned with miniature adjacent jumpers		
gray	**769-503**	250
blue	**769-503/000-006**	250
green-yellow	**769-503/000-016**	250
1-conductor center module, with coding fingers, can be commoned with miniature adjacent jumpers		
gray	**769-502**	250
blue	**769-502/000-006**	250
green-yellow	**769-502/000-016**	250
1-conductor base module, with integrated end plate, with coding fingers, can be commoned with miniature adjacent jumpers		
gray	**769-501**	250
blue	**769-501/000-006**	250
green-yellow	**769-501/000-016**	250

	Item No.	Pack. Unit
2-conductor end module, with coding fingers, can be commoned with adjacent jumpers and staggered jumpers		
gray	**769-506**	250
blue	**769-506/000-006**	250
green-yellow	**769-506/000-016**	250
2-conductor center module, with coding fingers, can be commoned with adjacent jumpers and staggered jumpers		
gray	**769-505**	250
blue	**769-505/000-006**	250
green-yellow	**769-505/000-016**	250
2-conductor base module, with integrated end plate, with coding fingers, can be commoned with adjacent jumpers and staggered jumpers		
gray	**769-504**	250
blue	**769-504/000-006**	250
green-yellow	**769-504/000-016**	250

	Item No.	Pack. Unit
1-conductor end module, angled, with coding fingers		
gray	**769-515**	250
blue	**769-515/000-006**	250
green-yellow	**769-515/000-016**	250
1-conductor center module, angled, with coding fingers		
gray	**769-513**	250
blue	**769-513/000-006**	250
green-yellow	**769-513/000-016**	250
1-conductor base module, angled, with integrated end plate, with coding fingers		
gray	**769-512**	250
blue	**769-512/000-006**	250
green-yellow	**769-512/000-016**	250

Item-Specific Accessories

Miniature adjacent jumper, insulated, I_N 24 A



gray **769-402** 100 (4x25)

Item-Specific Accessories

Adjacent jumper, insulated, I_N = I_N terminal block



gray **280-402** 200 (8x25)

Accessories for Female Plugs

Appropriate marking system:
Mini-WSB/Mini-WSB Inline (see Section 13)

Insulation stop, 5 pcs/strip, 0.08 … 0.2 mm² "s" (0.14 mm² "f-st")



white **769-470** 200 (8x25)

Insulation stop, 5 pcs/strip, 0.25 … 0.5 mm²



light gray **769-471** 200 (8x25)

Insulation stop, 5 pcs/strip, 0.75 … 1 mm²



dark gray **769-472** 200 (8x25)

Protective warning marker, with black high-voltage symbol, for 5 terminal blocks



yellow **280-415** 100 (4x25)

Locking lever, for 1-pole female plugs



gray **769-428** 100 (4x25)
orange **769-429** 100 (4x25)

Locking lever, for female plugs with 2 poles and more



orange **769-431** 100 (4x25)
gray **769-430** 100 (4x25)

Test plug, with 500 mm cable, 2 mm Ø, max. 42 V



red **210-136** 50

Test plug, with 500 mm cable, 2.3 mm Ø, max. 42 V



yellow **210-137** 50

Operating lever, loose, for male and female connectors with CAGE CLAMP® connection



769-434 2000 (20x100)

Mini-WSB Quick marking system, white, 10 strips with 10 markers per card, 5 mm wide markers



plain **248-501** 5

Strain relief plate, gray



1-pole **769-410** 100 (4x25)
2- … 3-pole **769-411** 100 (4x25)
4- … 5-pole **769-412** 100 (4x25)

Strain relief plate, gray



6- … 9-pole **769-413** 100 (4x25)
10- … 15-pole **769-414** 100 (4x25)

Overview of certification organizations, see page 654

Customizing Modular Female Plugs
WAGO's modular X-COM®-SYSTEM female plugs can be customized for applications requiring varying numbers of poles (e.g., when designing prototypes).

Modules and Pole Numbers
A customized X-COM®-SYSTEM female plug consists of:
- One base module with an integrated end plate
- Up to 13 center modules (corresponding to a 15-pole female plug = maximum pole number)
- One end module

Intended Use
According to EN 61984, pluggable connectors without a current interrupting capacity shall not be mated or unmated when live or under load.

Assembly
The appropriate mounting tool shall be used in order to guarantee that the individual modules are properly attached to each other without damaging the locking latches.

❶ 500 V = rated voltage
6 kV = rated surge voltage
3 = pollution degree
(see Section 14)

❷ Current-carrying capacity curves upon request

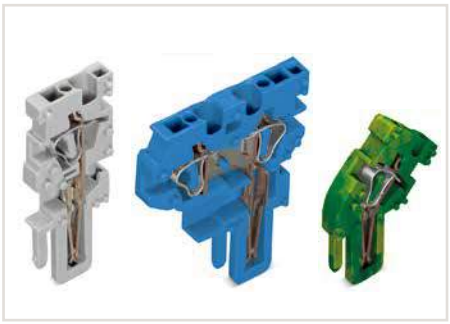
End module

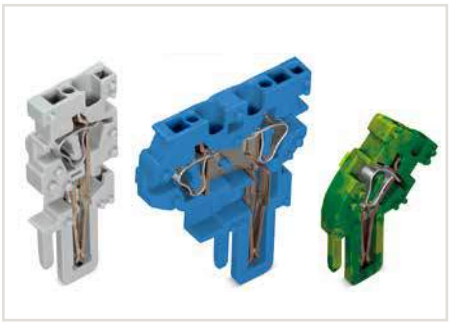
Center module


Base module

6

Example: 5-Pole, 1-Conductor Female Plug

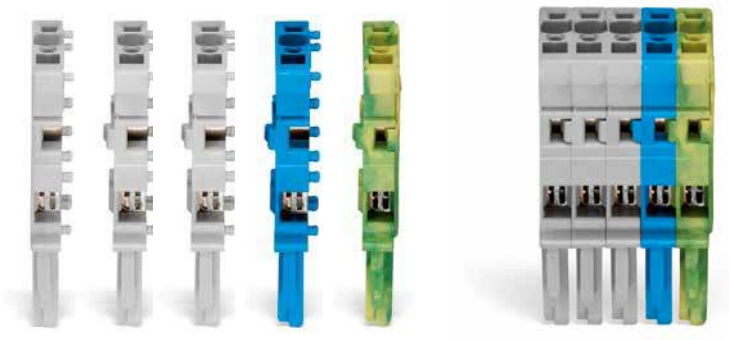

Base module with integrated end plate
769-501/000-016

Center module
769-502/000-006

Center modules
769-502

End module
769-503

CAGE CLAMP®

X-COM®-SYSTEM
Pre-Assembled Female Plugs
4 mm², 769 Series

0.08 ... 4 mm² | 28 ... 12 AWG 500 V/6 kV/3 ❶ I_N 32 A ❷ Module width 5 mm / 0.197 inch 8 ... 9 mm / 0.31 ... 0.35 inch	0.08 ... 4 mm² | 28 ... 12 AWG 500 V/6 kV/3 ❶ I_N 32 A ❷ Module width 5 mm / 0.197 inch 8 ... 9 mm / 0.31 ... 0.35 inch

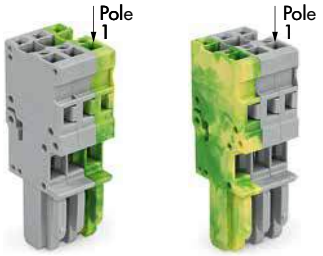

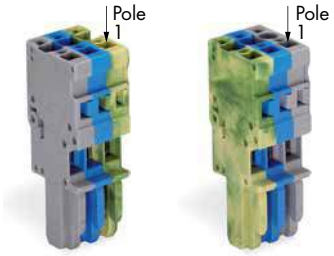

❶ 500 V = rated voltage
6 kV = rated surge voltage
3 = pollution degree
(see Section 14)

❷ Current-carrying capacity curves upon request

6

Pole No.	Item No.	Pack. Unit
1-conductor female plug, with ground base module (green-yellow), fits into carrier terminal blocks or male connectors, with coding fingers, can be commoned with miniature adjacent jumpers		
3	**769-103/000-036**	25
4	**769-104/000-036**	25
5	**769-105/000-036**	20
6	**769-106/000-036**	10
7	**769-107/000-036**	10
8	**769-108/000-036**	10
9	**769-109/000-036**	10
10	**769-110/000-036**	10
11	**769-111/000-036**	5
12	**769-112/000-036**	5
13	**769-113/000-036**	5
14	**769-114/000-036**	5
15	**769-115/000-036**	5
1-conductor female plug, with ground end module (green-yellow), fits into carrier terminal blocks or male connectors, with coding fingers, can be commoned with miniature adjacent jumpers		
3	**769-103/000-037**	25
4	**769-104/000-037**	25
5	**769-105/000-037**	20
6	**769-106/000-037**	10
7	**769-107/000-037**	10
8	**769-108/000-037**	10
9	**769-109/000-037**	10
10	**769-110/000-037**	10
11	**769-111/000-037**	5
12	**769-112/000-037**	5
13	**769-113/000-037**	5
14	**769-114/000-037**	5
15	**769-115/000-037**	5

Pole No.	Item No.	Pack. Unit
1-conductor female plug, with ground base module (green-yellow), fits into carrier terminal blocks or male connectors, with coding fingers, can be commoned with miniature adjacent jumpers		
3	**769-103/000-038**	25
4	**769-104/000-038**	25
5	**769-105/000-038**	20
6	**769-106/000-038**	10
7	**769-107/000-038**	10
8	**769-108/000-038**	10
9	**769-109/000-038**	10
10	**769-110/000-038**	10
11	**769-111/000-038**	5
12	**769-112/000-038**	5
13	**769-113/000-038**	5
14	**769-114/000-038**	5
15	**769-115/000-038**	5
1-conductor female plug, with ground end module (green-yellow), fits into carrier terminal blocks or male connectors, with coding fingers, can be commoned with miniature adjacent jumpers		
3	**769-103/000-039**	25
4	**769-104/000-039**	25
5	**769-105/000-039**	20
6	**769-106/000-039**	10
7	**769-107/000-039**	10
8	**769-108/000-039**	10
9	**769-109/000-039**	10
10	**769-110/000-039**	10
11	**769-111/000-039**	5
12	**769-112/000-039**	5
13	**769-113/000-039**	5
14	**769-114/000-039**	5
15	**769-115/000-039**	5

Accessories for 1-Conductor Female Plugs

Appropriate marking system:
Mini-WSB/Mini-WSB Inline (see Section 13)

Insulation stop, 5 pcs/strip, 0.08 ... 0.2 mm² "s" (0.14 mm² "f-st")



white **769-470** 200 (8x25)

Insulation stop, 5 pcs/strip, 0.25 ... 0.5 mm²



light gray **769-471** 200 (8x25)

Insulation stop, 5 pcs/strip, 0.75 ... 1 mm²



dark gray **769-472** 200 (8x25)

Miniature adjacent jumper, insulated, I_N 24 A



gray **769-402** 100 (4x25)

Accessories

Appropriate marking system:
Mini-WSB/Mini-WSB Inline (see Section 13)

Locking lever, for 1-pole female plugs



gray **769-428** 100 (4x25)
orange **769-429** 100 (4x25)

Locking lever, for female plugs with 2 poles and more



orange **769-431** 100 (4x25)
gray **769-430** 100 (4x25)

Test plug, with 500 mm cable, 2 mm Ø, max. 42 V



red **210-136** 50

Test plug, with 500 mm cable, 2.3 mm Ø, max. 42 V



yellow **210-137** 50

Protective warning marker, with black high-voltage symbol, for 5 terminal blocks



yellow **280-415** 100 (4x25)

Strain relief plate, gray



2- ... 3-pole **769-411** 100 (4x25)
4- ... 5-pole **769-412** 100 (4x25)

Strain relief plate, gray



6- ... 9-pole **769-413** 100 (4x25)
10- ... 15-pole **769-414** 100 (4x25)

Snap-on type relief housing, consisting of strain relief support/housing



3-pole **769-1603** 25

Snap-on type relief housing, consisting of strain relief support/housing

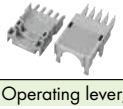

5-pole **769-1605** 25

Operating lever, loose, for male and female connectors with CAGE CLAMP® connection



769-434 2000 (20x100)

Mini-WSB Quick marking system, white, 10 strips with 10 markers per card, 5 mm wide markers



plain **248-501** 5

Overview of certification organizations, see page 654

X-COM®-SYSTEM – Snap-on Type Strain Relief Housings for Female Plugs and Male Connectors with CAGE CLAMP® Connection

769 Series

Snap-on type relief housing	Snap-on type relief housing

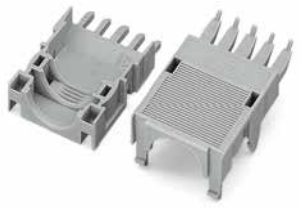

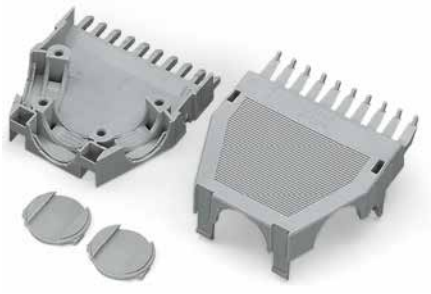

1 One cable outlet (rear side), 2- ... 5-pole only suitable for cable ties (Fa. Hellermann – not offered by WAGO) not for cable clamp
2 One cable outlet (rear side)
3 Two cable outlets and one cover
4 Three cable outlets and two covers

Pole No.	Item No.	Pack. Unit
Snap-on type strain relief housing, consists of strain relief support and housing, gray		
2	769-1602 1	25
3	769-1603 1	25
4	769-1604 1	25
5	769-1605 1	25

Pole No.	Item No.	Pack. Unit
Snap-on type strain relief housing, consists of strain relief support and housing, gray		
6	769-1606 2	25
7	769-1607 2	25
8	769-1608 3	25
9	769-1609 3	25
10	769-1610 4	25
11	769-1611 4	25
12	769-1612 4	25
13	769-1613 4	25
14	769-1614 4	25
15	769-1615 4	25

Item-Specific Accessories

WSB Quick marking system, white, 10 strips with 10 markers per card, for terminal widths 5 ... 17.5 mm



plain 209-501 5

Item-Specific Accessories

Cable clamp, for strain relief



for 6 or more poles 209-174 25

Mounting screw, for cable clamp



for 6 or more poles 209-173 50

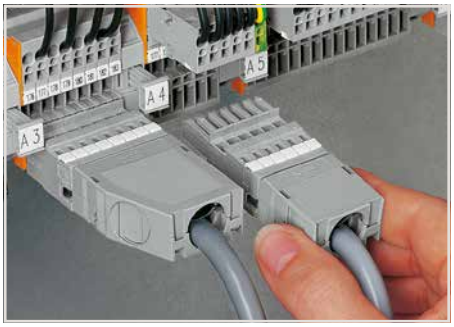

Application:
Snap-on type strain relief housings for 769 Series

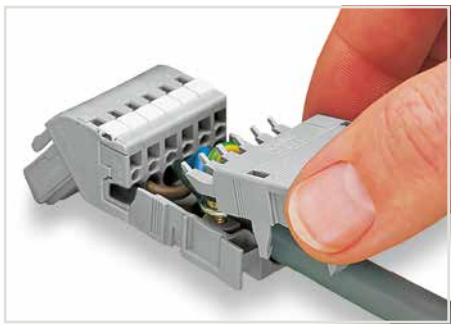

Snapping on a strain relief housing.

Dimensions for strain relief housings

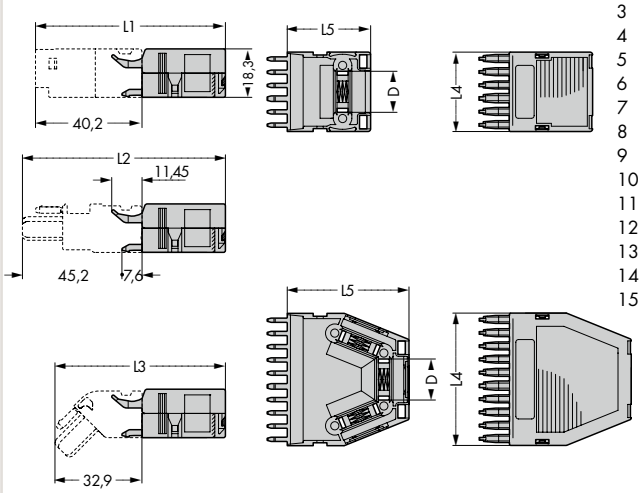

pole no.	L1	L2	L3	L4	L5	D
2	71.7	76.7	64.4	10	31.5	5
3	71.7	76.7	64.4	15	31.5	9.7
4	71.7	76.7	64.4	20	31.5	14
5	71.7	76.7	64.4	25	31.5	14
6	71.7	76.7	64.4	30	31.5	15.5
7	77.7	81.7	69.4	35	36.5	15.5
8	86.2	91.2	78.9	40	46	15.5
9	86.2	91.2	78.9	45	46	15.5
10	86.2	91.2	78.9	50	46	15.5
11	86.2	91.2	78.9	55	46	15.5
12	86.2	91.2	78.9	60	46	15.5
13	86.2	91.2	78.9	65	46	15.5
14	86.2	91.2	78.9	70	46	15.5
15	86.2	91.2	78.9	75	46	15.5

Dimensions (in mm):

CAGE CLAMP®

X-COM®-SYSTEM – 1-Conductor/1-Pin and 2-Pin Carrier Terminal Blocks and 1-Conductor Female Plugs

Current-Carrying Capacity Curves

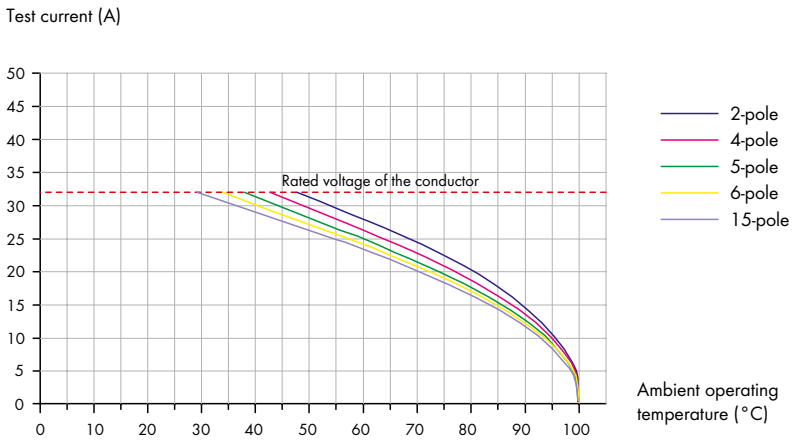



1-conductor/1-pin carrier terminal block (769-176)
Conductor cross-section: 4 mm²

1-conductor female plugs (769-102 to 769-115)
Conductor cross-section: 4 mm²
Conductor loop length: 1 m

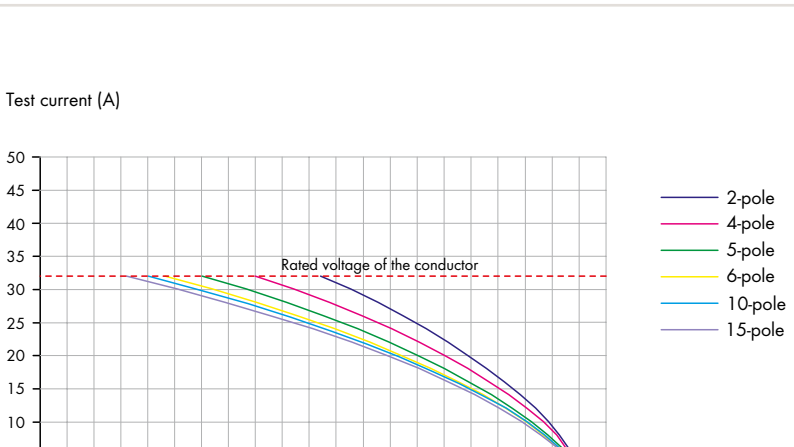



2-pin carrier terminal block (769-156)

1-conductor female plugs (769-102 to 769-115)
Conductor cross-section: 4 mm²
Conductor loop length: 1 m

CAGE CLAMP®

X-COM®-SYSTEM – 2-Conductor/2-Pin and 4-Pin Carrier Terminal Blocks and 1-Conductor Female Plugs

Current-Carrying Capacity Curves

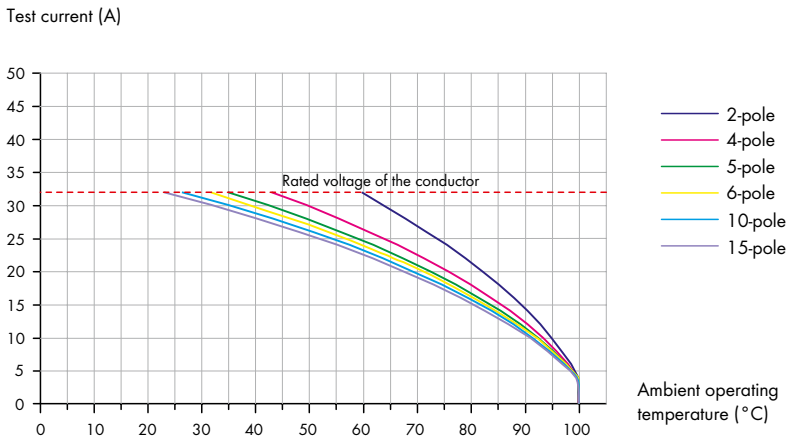

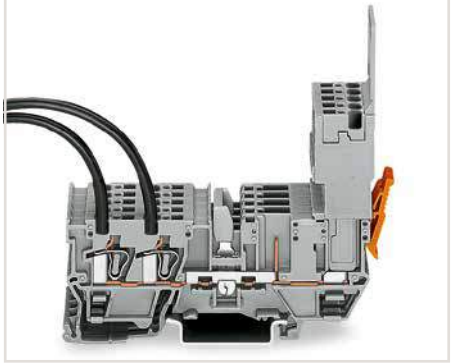

2-conductor/2-pin carrier terminal block (769-171)
Conductor cross-section: 4 mm²

1-conductor female plugs (769-102 to 769-115)
Conductor cross-section: 4 mm²
Conductor loop length: 1 m

6

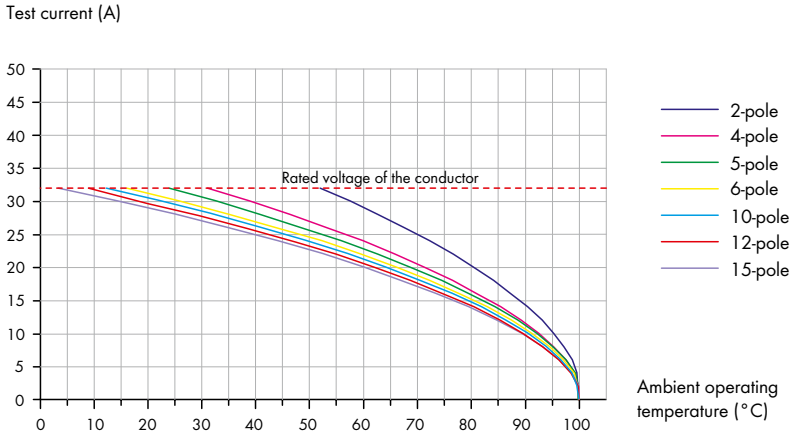



4-pin carrier terminal block (769-151)

1-conductor female plugs (769-102 to 769-115)
Conductor cross-section: 4 mm²
Conductor loop length: 1 m

CAGE CLAMP®

X-COM®-SYSTEM – Male Headers with Straight and Angled Solder Pins and 1-Conductor Female Plugs

Current-Carrying Capacity Curves

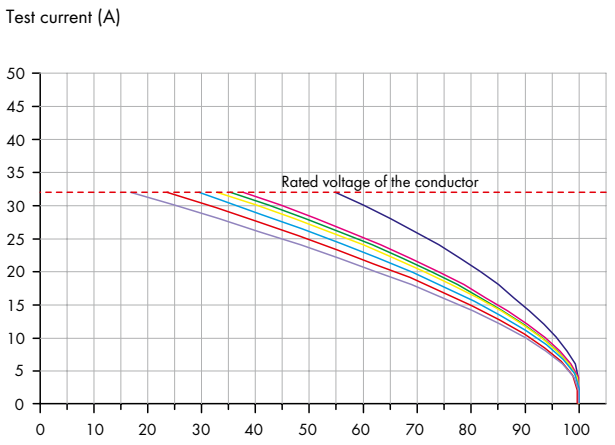

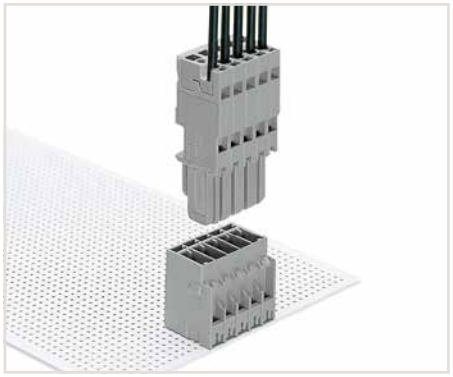

Male headers with straight solder pins (769-632 to 769-645)

1-conductor female plugs (769-102 to 769-115)
Conductor cross-section: 4 mm²
Conductor loop length: 1 m

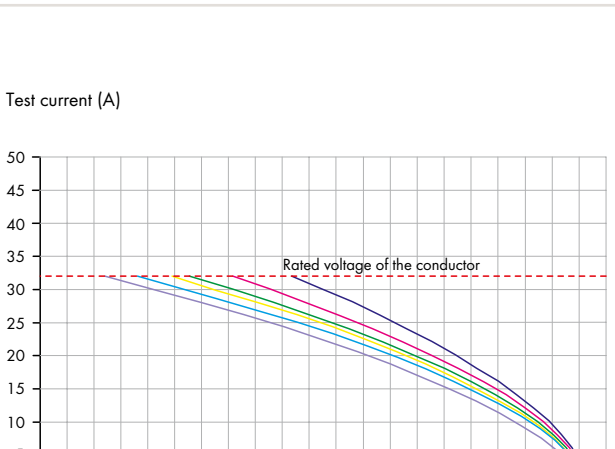

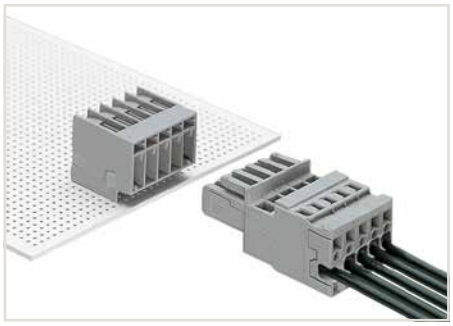

Male headers with angled solder pins (769-662 to 769-675)

1-conductor female plugs (769-102 to 769-115)
Conductor cross-section: 4 mm²
Conductor loop length: 1 m

CAGE CLAMP®

X-COM®-SYSTEM
Male Connectors with CAGE CLAMP® Connection and 1-Conductor Female Plugs

Current-Carrying Capacity Curves

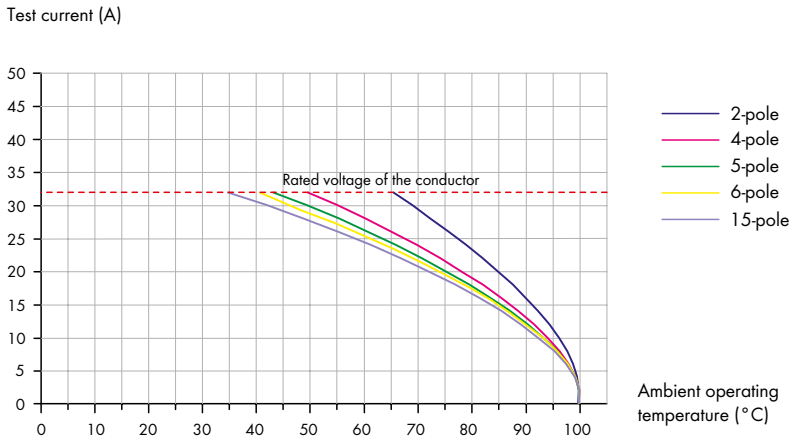



Male connectors with CAGE CLAMP® connection (769-602 to 769-615)
Conductor cross-section: 4 mm²

1-conductor female plugs (769-102 to 769-115)
Conductor cross-section: 4 mm²
Conductor loop length: 1 m

6

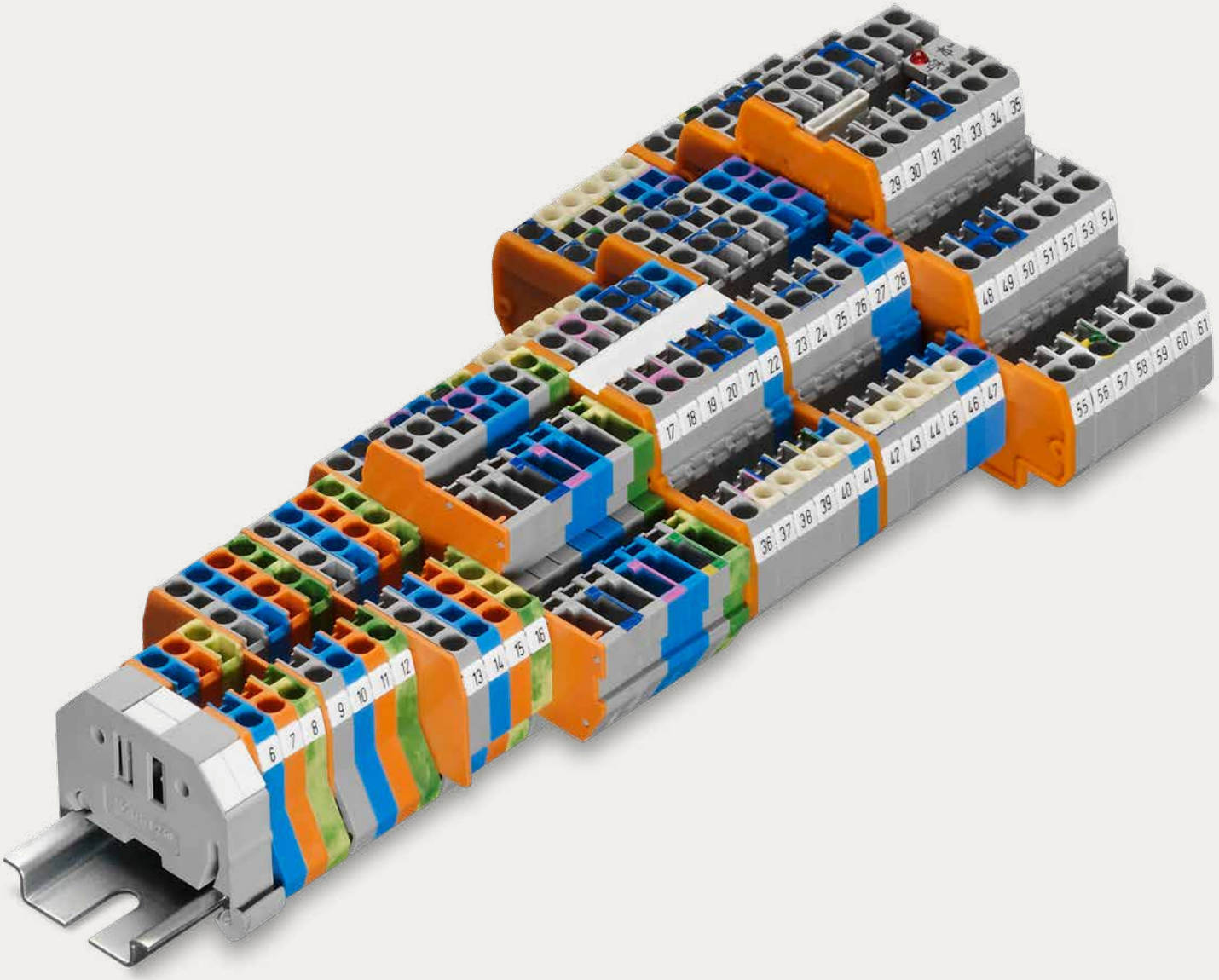

Rail-Mount Terminal Blocks, Miniature
Rail-Mount Terminal Blocks, Compact

Miniature and Compact Rail-Mount Terminal Blocks

Front-Entry Wiring

			Page
	**Through, Ground Conductor and Ex Terminal Blocks for DIN-35 and DIN-15 Rails** 0.08 … 2.5 mm² (28 … 12 AWG)	264 Series	408
	**Through, Ground Conductor and Ex Terminal Blocks for DIN-35 and DIN-15 Rails** 0.08 … 2.5 (4 “f-st”) mm² (28 … 12 AWG)	870 Series	412
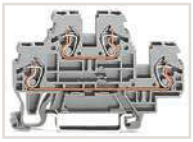	**Multilevel Rail-Mount Terminal Blocks** 0.08 … 2.5 (4 “f-st”) mm² (28 … 12 AWG)	870 Series	414
	**Multilevel Diode and LED Terminal Blocks** 0.08 … 2.5 (4 “f-st”) mm² (28 … 12 AWG)	870 Series	418
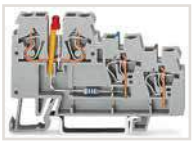	**Sensor and Actuator Terminal Blocks** 0.08 … 2.5 mm² (28 … 12 AWG)	270 Series	425
	**Accessories for Rail-Mount Terminal Blocks**	870 Series	423

Miniature Rail-Mount Terminal Blocks for DIN-35 and DIN-15 Rails, 264 Series

Description and Installation

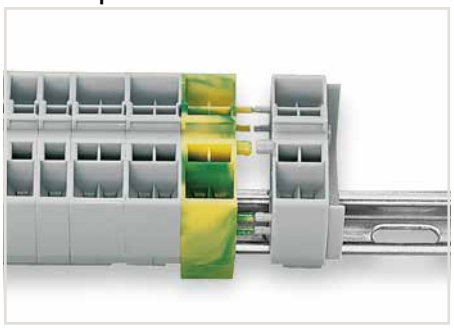

Quick assembly keys prevent reverse mounting.

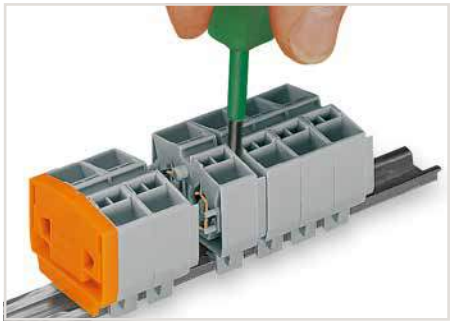

Separate terminal strip and slide individual terminal block laterally.



Remove terminal block from the carrier rail with a levering action.



Commoning with comb-style jumper bar.

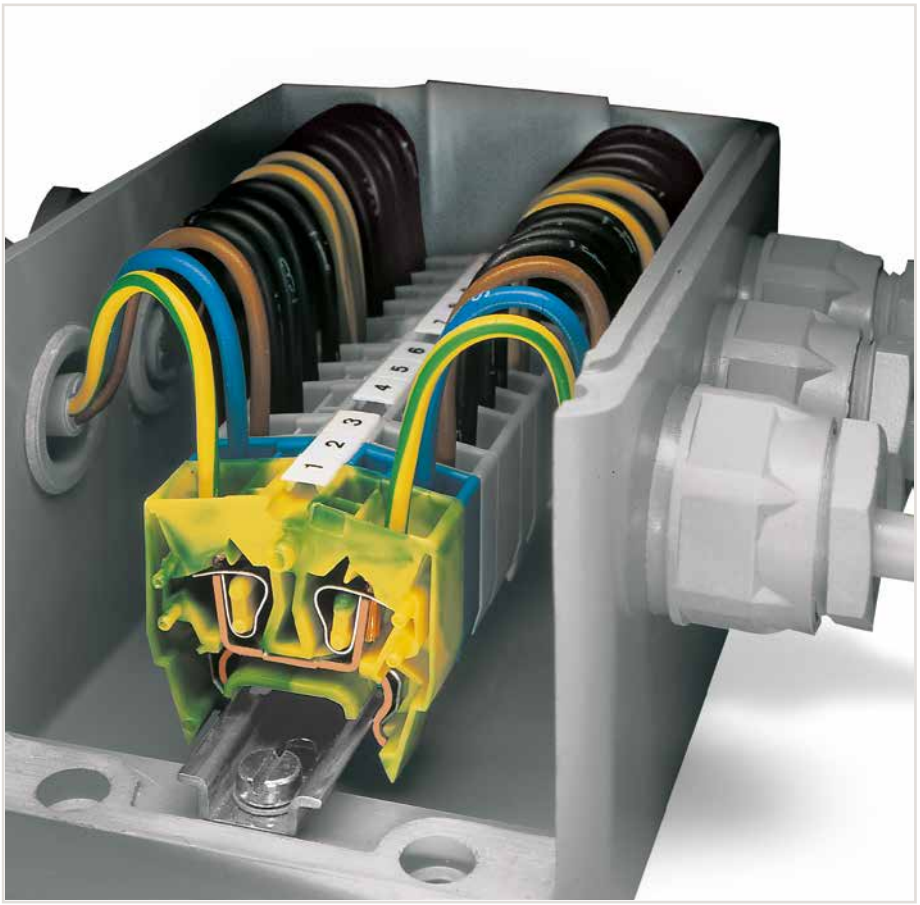

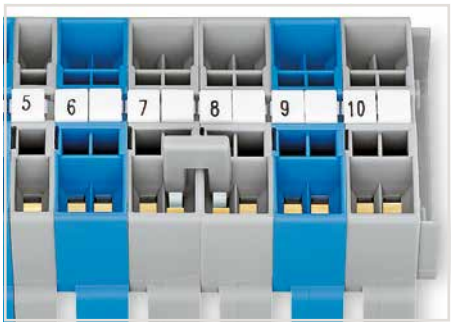

Commoning with comb-style jumper bar.

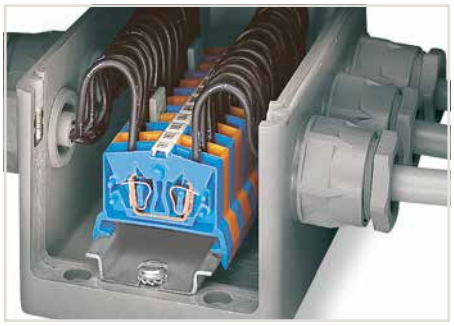

Easy-to-use miniature blocks that require minimal enclosure space.



Combining 2- and 4-conductor terminal blocks. Marking via Mini-WSB Quick markers.



CAGE CLAMP® terminates the following copper conductors:
solid



stranded



fine-stranded, also with tinned single strands

For aluminum conductors, see notes in Section 14.



CAGE CLAMP® connection
Inserting a conductor.
With ferruled conductors, it is necessary to use a terminal block one size smaller than the conductor's nominal cross section.

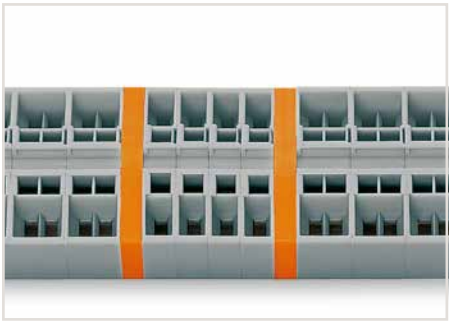

Separating groups via intermediate plates.

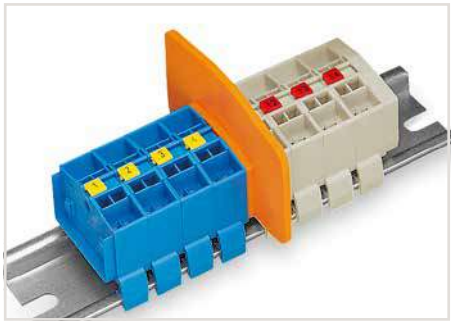

Separator for Ex e/Ex i applications for miniature rail-mount terminal blocks

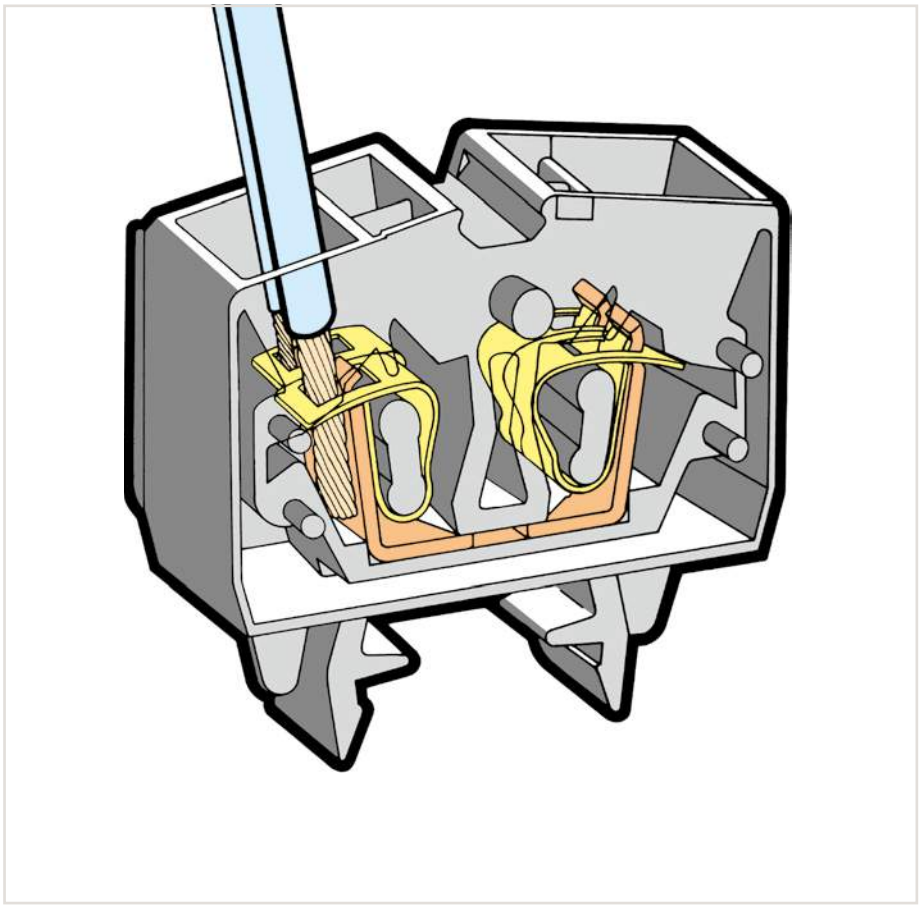



Testing by touch contact to the CAGE CLAMP® spring (limited to 0.5 A and 48 V test voltage) – test pins are not protected against accidental contact.

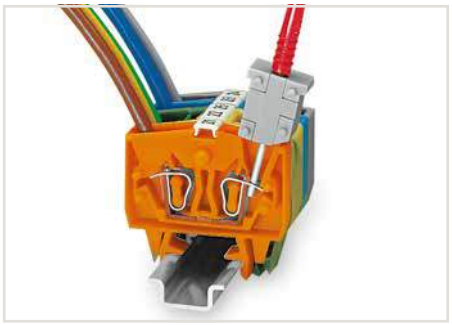

Testing via CAGE CLAMP® on the current bar (max. nominal current: 6 A).
CAGE CLAMP® clamps individual test contacts.
The maximum test voltage is 400 V.



Marking with T-marker tag (209-290).



fine-stranded,
tip-bonded



fine-stranded,
with ferrule
(gastight crimped)



fine-stranded,
with pin terminal
(gastight crimped)

Miniature Through/Ground Conductor and Ex Terminal Blocks for DIN-35 Rail

2.5 mm², 264 Series

0.08 … 2.5 mm²	28 … 12 AWG*
800 V/8 kV/3 ❶	300 V, 20 A
I_N 24 A	600 V, 20 A

Terminal block width 6 mm / 0.236 inch
8 … 9 mm / 0.31 … 0.35 inch

0.08 … 2.5 mm²	28 … 12 AWG*
800 V/8 kV/3 ❶	300 V, 20 A
I_N 24 A	600 V, 20 A

Terminal block width 10 mm / 0.394 inch
8 … 9 mm / 0.31 … 0.35 inch

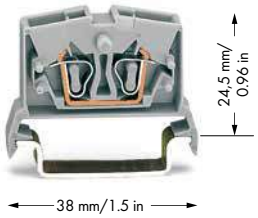

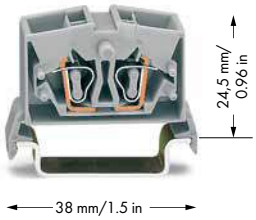

* 12 AWG: THHN, THWN

❶ 800 V = rated voltage
8 kV = rated surge voltage
3 = pollution degree
(see Section 14)

❷ Suitable for Ex i applications

❸ Suitable for Ex e II applications
0.5 … 2.5 mm² / 20 … 12 AWG*
690 V, 23 A
(see Section 14)

❹ See application notes for:
Alternate comb-style jumper bar, page 332
Test plug module, page 456

	Item No.	Pack. Unit
2-conductor miniature through terminal block, for DIN-35 rail		
gray	264-711	100
blue	264-714 ❷	100
orange	264-716	100
light gray	264-125 ❸	100

Item-Specific Accessories

Alternate comb-style jumper bar, insulated, I_N = I_N terminal block ❹			
	2-way	281-492	100 (4x25)
Test plug module, snaps together, 6 mm wide ❹			
	gray	249-136	100 (4x25)

	Item No.	Pack. Unit
4-conductor miniature through terminal block, for DIN-35 rail		
gray	264-731	100
blue	264-734 ❷	100
orange	264-736	100
light gray	264-225 ❸	100

Item-Specific Accessories

Alternate comb-style jumper bar, insulated, I_N = I_N terminal block ❹			
	2-way	280-492	200 (8x25)
Test plug module, snaps together, 10 mm wide ❹			
	gray	249-139	100 (4x25)

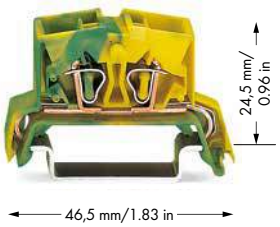

	Item No.	Pack. Unit
4-conductor miniature ground conductor terminal block, for DIN-35 rail		
green-yellow	264-737	100
green-yellow	264-737/999-950 ❸	100

Item-Specific Accessories

Alternate comb-style jumper bar, insulated, I_N = I_N terminal block ❹			
	2-way	280-492	200 (8x25)
Test plug module, snaps together, 10 mm wide ❹			
	gray	249-139	100 (4x25)

264 Series Accessories

Mini-WSB/Mini-WSB Inline
(see Section 13)

End and intermediate plate, 4 mm thick			
	orange	264-369	25
	gray	264-368	25
	light gray	264-370	25
Separator for Ex e/Ex i applications, orange, 4 mm thick			
	66 mm	264-367	25
Comb-style jumper bar, insulated, I_N 16 A, gray, reduces maximum conductor size to 1.5 mm² / 16 AWG			
	2-way	264-402	200 (8x25)
Operating tool, of insulating material			
	2-way	280-432	1
Test plug, with 500 mm cable, 2 mm Ø, max. 42 V			
	red	210-136	50
Test plug, with 500 mm cable, 2.3 mm Ø, max. 42 V			
	yellow	210-137	50
Mini-WSB Quick marking system, white, 10 strips with 10 markers per card, 5 mm wide markers			
	plain	248-501	5
Screwless end stop, for DIN-35 rail, 6 mm wide			
	gray	249-116	100 (4x25)
Screwless end stop, for DIN-35 rail, 10 mm wide			
	gray	249-117	50 (2x25)
Steel carrier rail, per EN 60715, 35 x 7.5 mm, 1 mm, 2 m long			
	slotted	210-112	10 (10x1)
Steel carrier rail, per EN 60715, 35 x 7.5 mm, 1 mm, 2 m long			
	unslotted	210-113	10
Aluminum carrier rail, similar to EN 60715, 35 x 8.2 mm, 1.6 mm, 2 m long			
	unslotted	210-196	10

Overview of certification organizations, see page 654

Miniature Through/Ground Conductor and Ex Terminal Blocks for DIN-15 Rail

2.5 mm², 264 Series

0.08 … 2.5 mm²	28 … 12 AWG*
800 V/8 kV/3 ❶	300 V, 20 A
I_N 24 A	600 V, 20 A
Terminal block width 6 mm / 0.236 inch	
8 … 9 mm / 0.31 … 0.35 inch	

0.08 … 2.5 mm²	28 … 12 AWG*
800 V/8 kV/3 ❶	300 V, 20 A
I_N 24 A	600 V, 20 A
Terminal block width 10 mm / 0.394 inch	
8 … 9 mm / 0.31 … 0.35 inch	

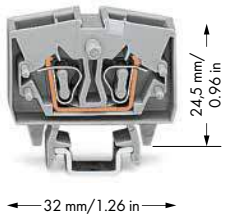

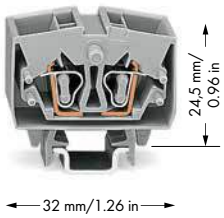

* 12 AWG: THHN, THWN

❶ 800 V = rated voltage
8 kV = rated surge voltage
3 = pollution degree
(see Section 14)

❷ Suitable for Ex i applications

❸ Suitable for Ex e II applications
0.5 … 2.5 mm² / 20 … 12 AWG*
690 V, 23 A
(see Section 14)

❹ See application notes for:
Alternate comb-style jumper bar, page 332
Test plug module, page 456

	Item No.	Pack. Unit
2-conductor miniature through terminal block, for DIN-15 rail		
gray	264-701	100
blue	264-704 ❷	100
orange	264-706	100
light gray	264-120 ❸	100

Item-Specific Accessories

Alternate comb-style jumper bar, insulated, I_N = I_N terminal block ❹			
2-way	281-492	100 (4x25)	
Test plug module, snaps together, 6 mm wide ❹			
gray	249-136	100 (4x25)	

	Item No.	Pack. Unit
4-conductor miniature through terminal block, for DIN-15 rail		
gray	264-721	100
blue	264-724 ❷	100
orange	264-726	100
light gray	264-220 ❸	100

Item-Specific Accessories

Alternate comb-style jumper bar, insulated, I_N = I_N terminal block ❹			
2-way	280-492	200 (8x25)	
Test plug module, snaps together, 10 mm wide ❹			
gray	249-139	100 (4x25)	

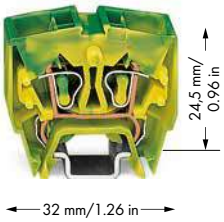

	Item No.	Pack. Unit
4-conductor miniature ground conductor terminal block, for DIN-15 rail		
green-yellow	264-727	100
green-yellow	264-727/999-950 ❸	100

Item-Specific Accessories

Alternate comb-style jumper bar, insulated, I_N = I_N terminal block ❹			
2-way	280-492	200 (8x25)	
Test plug module, snaps together, 10 mm wide ❹			
gray	249-139	100 (4x25)	

264 Series Accessories

Mini-WSB/Mini-WSB Inline
(see Section 13)

End and intermediate plate, 4 mm thick			
orange	264-369	25	
gray	264-368	25	
light gray	264-370	25	
Separator for Ex e/Ex i applications, orange, 4 mm thick			
66 mm	264-367	25	
Comb-style jumper bar, insulated, I_N 16 A, gray, reduces maximum conductor size to 1.5 mm² / 16 AWG			
2-way	264-402	200 (8x25)	
Operating tool, of insulating material			
2-way	280-432	1	
Test plug, with 500 mm cable, 2 mm Ø, max. 42 V			
red	210-136	50	
Test plug, with 500 mm cable, 2.3 mm Ø, max. 42 V			
yellow	210-137	50	
Mini-WSB Quick marking system, white, 10 strips with 10 markers per card, 5 mm wide markers			
plain	248-501	5	
Screwless end stop, for DIN-15 rail, 6 mm wide			
gray	249-101	25	
Steel carrier rail, per EN 60715, 15 x 5.5 mm, 1 mm, 2 m long			
slotted	210-111	1	
Steel carrier rail, per EN 60715, 15 x 5.5 mm, 1 mm, 2 m long			
unslotted	210-295	1	
Aluminum carrier rail, similar to EN 60715, 15 x 5.5 mm, 1 mm, 2 m long			
unslotted	210-296	10	
Operating tool, of insulating material			
1-way	209-130	1	

7

Compact Rail-Mount Terminal Blocks for DIN-35 and DIN-15 Rails, 870 Series

Description and Installation

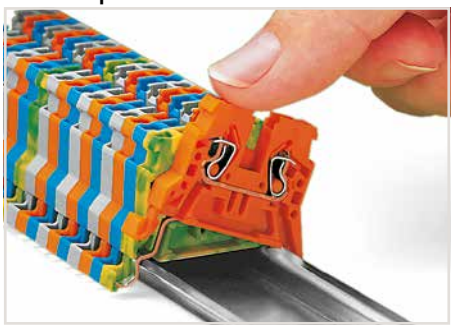

Snapping a rail-mount terminal block onto DIN-35 rail.

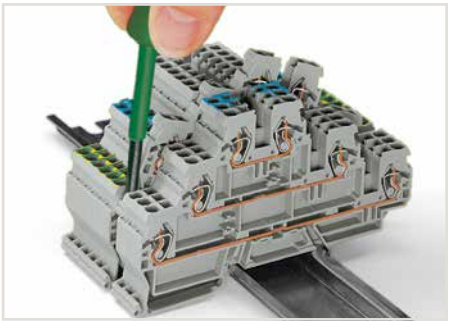

Removing a terminal block from the assembly.

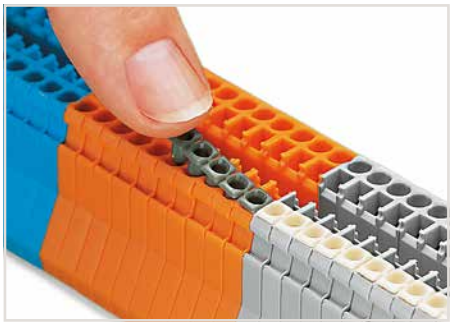

Inserting an insulation stop into conductor entry holes of terminal strip.



Push jumper bars down firmly until fully inserted. When using multipole bars, push alternately on the right and then left side, until installed.
Push-in type jumper bars 1 – 3 – 5 – 7 or 1 – – 4 – – 7 upon request



Commoning with push-in type jumper bars:
Two parallel jumper slots are accommodated in one terminal block.

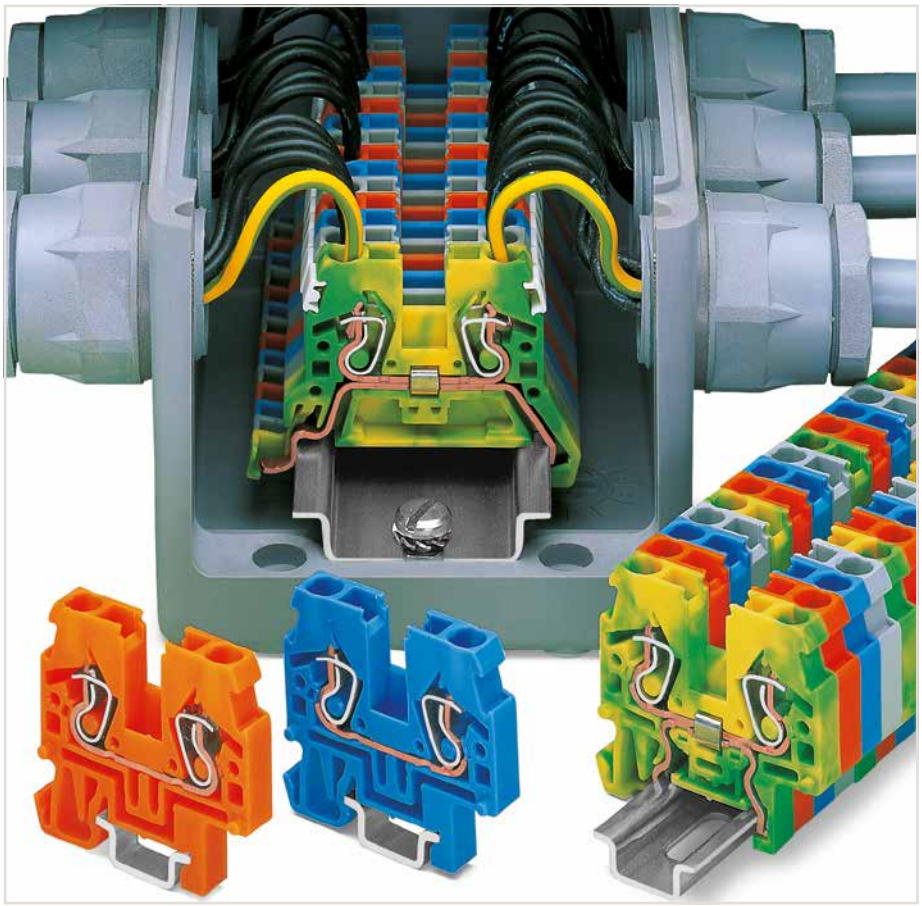



Commoning terminal blocks of different sizes via step-down jumpers.

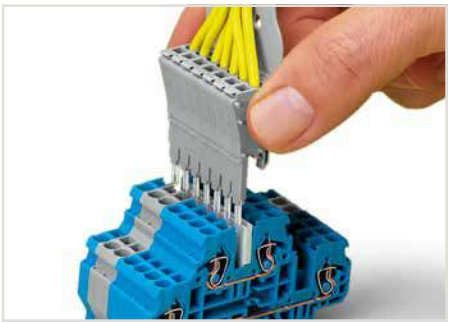

Testing:
Using a pre-wired module assembly, similar to test plugs.

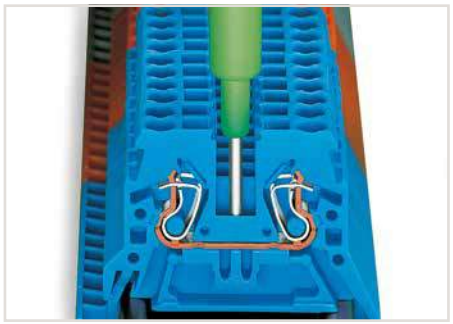

Testing with phase testing device, also possible with single-pole voltage tester.



CAGE CLAMP® terminates the following copper conductors:
solid



stranded



fine-stranded, also with tinned single strands

For aluminum conductors, see notes in Section 14.



CAGE CLAMP® connection
Inserting a conductor (0.08 … 4 mm² "f-st").
With ferruled conductors, it is necessary to use a terminal block one size smaller than the conductor's nominal cross section.

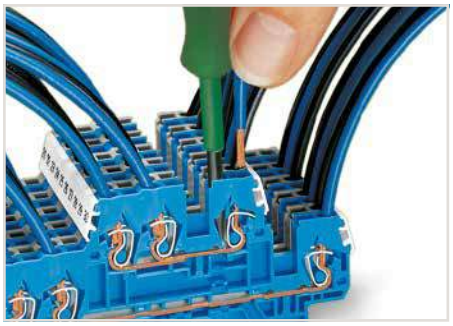

CAGE CLAMP® connection
Inserting a conductor(0.08 … 4 mm² "f-st").

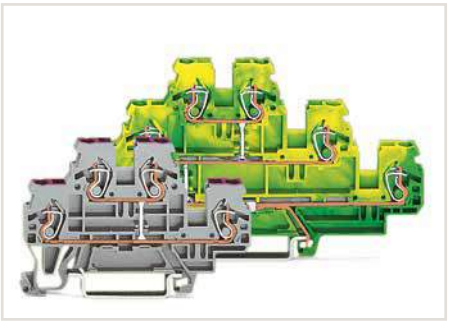

Multilevel terminal blocks
Double- and triple-deck terminal blocks with internal commoning acting as 4- and 6-conductor terminal blocks

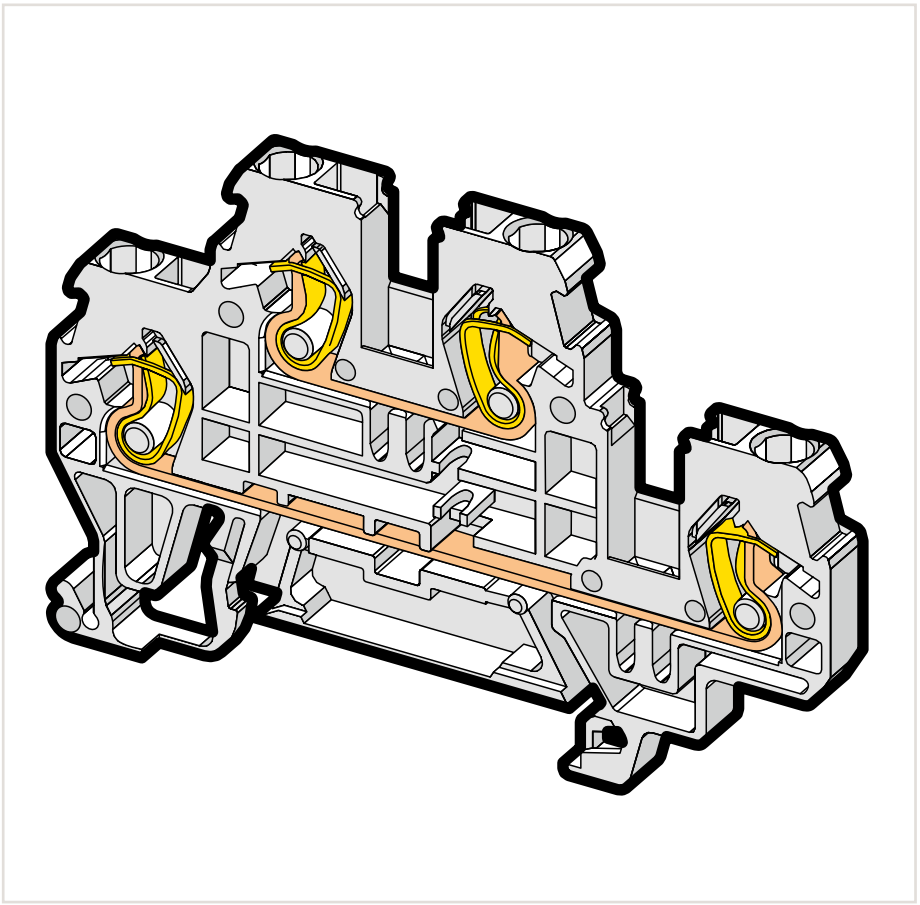

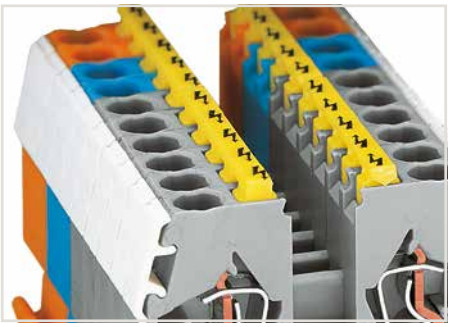

Protective warning markers (280-405), with a black high-voltage symbol

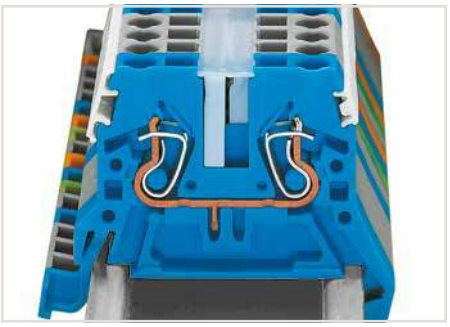

WMB markers in Mini-WSB marker slots
Marking strip, translucent
Mini-WSB markers

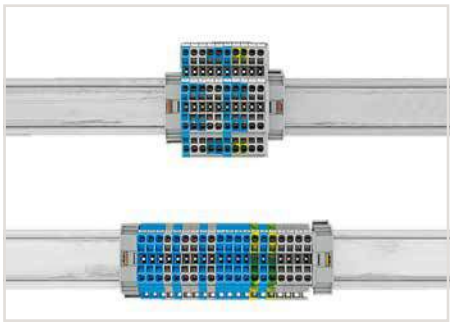

Use 50 % less rail space with double-deck terminal blocks.

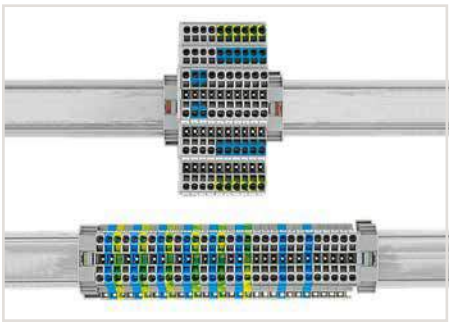

Use 67 % less rail space with triple-deck terminal blocks.



Translucent marking strip (709-196) – jumpers below may be visible.



fine-stranded,
tip-bonded



fine-stranded,
with ferrule
(gastight crimped)



fine-stranded,
with pin terminal
(gastight crimped)

Through/Ground Conductor and Ex Terminal Blocks for DIN-35 and DIN-15 Rails

2.5 (4 "f-st") mm², 870 Series

0.08 … 2.5 (4"f-st")mm² ❶ | 28 … 12 AWG 500 V/6 kV/3 ❷ | 300 V, 20 A I_N 24 A Terminal block width 5 mm / 0.197 inch 6 … 7 mm / 0.24 … 0.28 inch	0.08 … 2.5 (4"f-st")mm² ❶ | 28 … 12 AWG 500 V/6 kV/3 ❷ | 300 V, 20 A I_N 24 A Terminal block width 5 mm / 0.197 inch 6 … 7 mm / 0.24 … 0.28 inch	0.08 … 2.5 (4"f-st")mm² ❶ | 28 … 12 AWG 500 V/6 kV/3 ❷ | 300 V, 20 A I_N 24 A Terminal block width 5 mm / 0.197 inch 6 … 7 mm / 0.24 … 0.28 inch

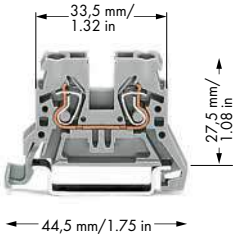

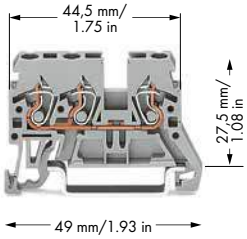

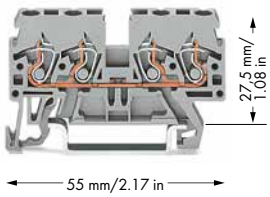

	Item No.	Pack. Unit
2-conductor through terminal block, for DIN-35 rail		
gray	**870-901**	100
blue	**870-904** ❸	100
orange	**870-902**	100
light gray	**870-909** ❹	100
2-conductor ground terminal block, for DIN-35 rail, Notice: This ground conductor terminal block cannot be commoned with push-in type jumper bars!		
green-yellow	**870-907**	100
green-yellow	**870-907/999-950** ❹	100

	Item No.	Pack. Unit
3-conductor through terminal block, for DIN-35 rail		
gray	**870-681**	100
blue	**870-684** ❸	100
orange	**870-682**	100
3-conductor ground terminal block, for DIN-35 rail, Notice: This ground conductor terminal block cannot be commoned with push-in type jumper bars!		
green-yellow	**870-687**	100

	Item No.	Pack. Unit
4-conductor through terminal block, for DIN-35 rail		
gray	**870-831**	100
blue	**870-834** ❸	100
orange	**870-832**	100
4-conductor ground terminal block, for DIN-35 rail, Notice: This ground conductor terminal block cannot be commoned with push-in type jumper bars!		
green-yellow	**870-837**	100
Other terminal blocks with the same profile:		
Double-potential	**870-826**	Page 413

Item-Specific Accessories

End and intermediate plate, 2 mm thick			
	orange	**870-924**	100 (4x25)
	gray	**870-923**	100 (4x25)
	light gray	**870-925**	100 (4x25)
Separator, oversized, 2 mm thick			
	orange	**870-929**	100 (4x25)
	gray	**870-928**	100 (4x25)
End and intermediate plate, 2 mm thick, for 2-conductor ground conductor Ex terminal blocks only			
	green-yellow	**870-926**	100 (4x25)
Separator for Ex e/Ex i applications, orange, 3 mm thick			
	90 mm	**209-190**	50 (2x25)
	120 mm	**209-191**	50 (2x25)

Item-Specific Accessories

End and intermediate plate, 1 mm thick			
	orange	**870-934**	100 (4x25)
	gray	**870-933**	100 (4x25)
Separator, oversized, 1 mm thick			
	orange	**870-947**	100 (4x25)
	gray	**870-946**	100 (4x25)

Item-Specific Accessories

End and intermediate plate, 1 mm thick			
	orange	**870-944**	100 (4x25)
	gray	**870-943**	100 (4x25)
Separator, oversized, 1 mm thick			
	orange	**870-949**	100 (4x25)
	gray	**870-948**	100 (4x25)

870 Series Accessories

Appropriate marking systems: WMB/WMB Inline/Mini-WSB/Mini-WSB Inline (see Section 13)

Insulation stop, 5 pcs/strip, 0.08 … 0.2 mm² "s" (0.14 mm² "f-st") ❺			
	white	**280-470**	200 (8x25)
Insulation stop, 5 pcs/strip, 0.25 … 0.5 mm² ❺			
	light gray	**280-471**	200 (8x25)
Insulation stop, 5 pcs/strip, 0.75 … 1 mm² ❺			
	dark gray	**280-472**	200 (8x25)

Push-in type jumper bar, insulated, I_N 18 A, light gray			
	2-way	**870-402**	200 (8x25)
	3-way	**870-403**	200 (8x25)
	4-way	**870-404**	100 (4x25)
	5-way	**870-405**	100 (4x25)
	6-way	**870-406**	100 (4x25)
	7-way	**870-407**	100 (4x25)
	8-way	**870-408**	100 (4x25)
	9-way	**870-409**	100 (4x25)
	10-way	**870-410**	50 (2x25)

Push-in type jumper bar, insulated, I_N 18 A, light gray			
	from 1 to 3	**870-433**	200 (8x25)
	from 1 to 4	**870-434**	200 (8x25)
	from 1 to 5	**870-435**	100 (4x25)
	from 1 to 6	**870-436**	100 (4x25)
	from 1 to 7	**870-437**	100 (4x25)
	from 1 to 8	**870-438**	100 (4x25)
	from 1 to 9	**870-439**	100 (4x25)
	from 1 to 10	**870-440**	50 (2x25)

0.08 ... 2.5 (4"f-st")mm² ❶ | **28 ... 12 AWG**
500 V/6 kV/3 ❷ | **300 V, 20 A**
I_N 24 A

Terminal block width 5 mm / 0.197 inch
6 ... 7 mm / 0.24 ... 0.28 inch



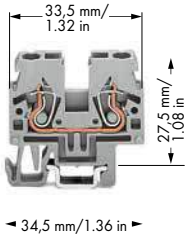

Mounting on DIN-15 rail:
Snap individual terminal blocks onto the DIN-15 rail and slide together.
Removal from DIN-15 rail:
Open assembly by laterally sliding terminal blocks with an operating tool and remove them from the rail.

❶ Max. insulation diameter: 4.4 mm

❷ 500 V = rated voltage
6 kV = rated surge voltage
3 = pollution degree
(see Section 14)

❹ Suitable for Ex i applications

❺ Suitable for Ex e II applications
0.2 ... 2.5 (4 "f-st") mm² / 24 ... 12 AWG
440 V, 22 A
Using 1 or more push-in type jumper bars, the maximum rated voltage is reduced to 275 V and the rated current to 13.5 A.
(see Section 14)

❻ See application notes for:
Insulation stop, page 331
Tap-off module, page 423

	Item No.	Pack. Unit
2-conductor through terminal block, for DIN-15 rail		
gray	**870-911**	100
blue	**870-914** ❸	100
orange	**870-912**	100
light gray	**870-919** ❹	100
2-conductor ground terminal block, for DIN-15 rail, Notice: This ground conductor terminal block cannot be commoned with push-in type jumper bars!		
green-yellow	**870-917**	100

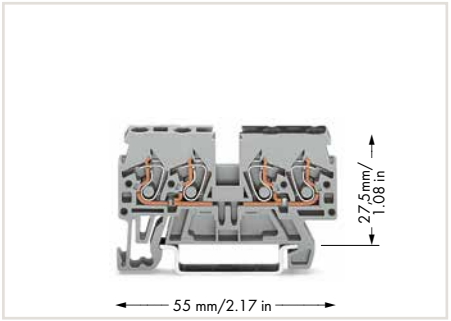

Double-potential terminal block, with integrated marking position
gray 870-826
Packing unit: 100 pcs

Notice: These double-potential terminal blocks cannot be commoned with push-in type jumper bars!
WAGO front-entry double-potential terminal blocks are space savers.
Two independent feedthrough circuits are placed in one insulated housing on one level in just 5 mm. This achieves a width of just 2.1 mm versus standard through terminal blocks for a total height of just 27.5 mm from the upper-edge of carrier rail.
Input and output of a circuit are placed on the same side of the terminal block. Both circuits can be individually marked according to input and output.

For technical data and accessories,
see www.wago.com



Terminal block marking directly on the terminal block either via Mini-WSB or WMB markers

Item-Specific Accessories

End and intermediate plate, 2 mm thick			
	orange	**870-924**	100 (4x25)
	gray	**870-923**	100 (4x25)
	light gray	**870-925**	100 (4x25)
Separator, oversized, 2 mm thick			
	orange	**870-929**	100 (4x25)
	gray	**870-928**	100 (4x25)

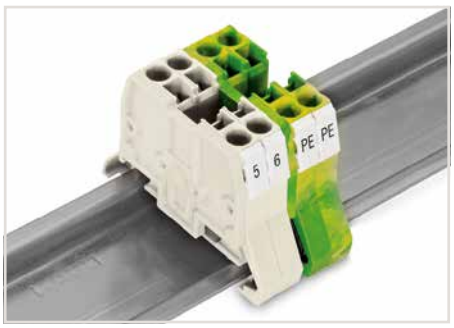

In order to meet creepage and clearance requirements for Ex e applications, it is necessary to insert an end or intermediate plate between a through and a ground conductor terminal block.
End plates 870-923 (gray), 870-924 (orange) and 870-925 (light gray), as well as separator plates 870-928 (gray) and 870-929 (orange) cannot be assembled to 2-conductor ground Ex terminal blocks (870-907/999-950).

Protective warning marker, with black high-voltage symbol, for 5 terminal blocks			
	yellow	**280-405**	100 (4x25)
Tap-off module, with anti-reverse mating protection, snaps together, 5 mm wide ❺			
	gray	**870-425**	100 (4x25)
Mini-WSB Quick marking system, white, 10 strips with 10 markers per card, 5 mm wide markers			
	plain	**248-501**	5

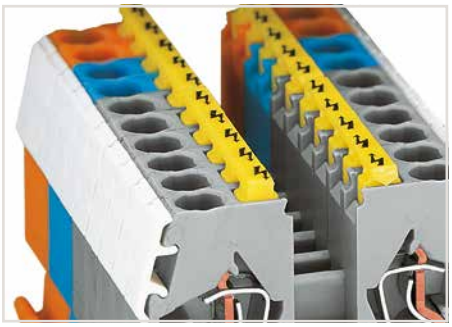

Protective warning markers (280-405), with a black high-voltage symbol

Double-Deck Terminal Blocks

2.5 (4 "f-st") mm², 870 Series

0.08 ... 2.5 (4"f-st")mm² ❶ | 28 ... 12 AWG 500 V/6 kV/3 ❷ | 300 V, 20 A I_N 24 A Terminal block width 5 mm / 0.197 inch 6 ... 7 mm / 0.24 ... 0.28 inch	0.08 ... 2.5 (4"f-st")mm² ❶ | 28 ... 12 AWG 500 V/6 kV/3 ❷ I_N 24 A Terminal block width 5 mm / 0.197 inch 6 ... 7 mm / 0.24 ... 0.28 inch

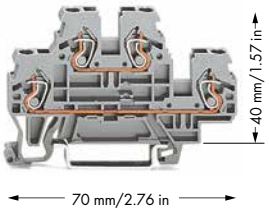

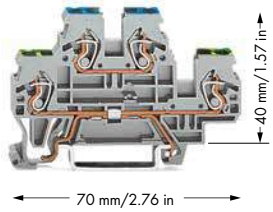

❶ Max. insulation diameter: 4.4 mm

❷ 500 V = rated voltage
6 kV = rated surge voltage
3 = pollution degree
(see Section 14)

❸ Suitable for Ex i applications

❹ Suitable for Ex e II applications
0.2 ... 2.5 (4 "f-st") mm² / 24 ... 12 AWG
440 V, 18 A
Using 1 or more push-in type jumper bars, the maximum rated voltage is reduced to 275 V and the rated current to 13.5 A.
(see Section 14)

❺ See application notes for:
Insulation stop, page 331

	Item No.	Pack. Unit
Double-deck terminal block, through/through terminal block, gray housing		
L/L	**870-501**	50
N/L	**870-502**	50
L/N	**870-503**	50
Double-deck terminal block, through/through terminal block, blue housing		
N/N	**870-504** ❸	50
Double-deck terminal block, through/through terminal block, light gray housing		
L/L Ex	**870-961** ❹	50
Other terminal blocks with the same profile:		
Diode	**870-540/281-410**	Page 418
LED	**870-543/281-434**	Page 418

	Item No.	Pack. Unit
Double-deck terminal block, ground conductor/through terminal block, gray housing		
PE/N	**870-517**	50
PE/L	**870-527**	50
Double-deck terminal block, ground conductor/through terminal block, light gray housing		
PE/L Ex	**870-967/999-950** ❹	50

Accessories

WMB/WMB Inline/Mini-WSB/Mini-WSB Inline (see Section 13)

End and intermediate plate, 2 mm thick			
	orange	**870-519**	100 (4x25)
	gray	**870-518**	100 (4x25)
Separator for Ex e/Ex i applications, orange, 3 mm thick			
	125.5 mm	**209-192**	50 (2x25)
Insulation stop, 5 pcs/strip, 0.08 ... 0.2 mm² "s"			
❺ 	(0.14 mm² "f-st")		
	white	**280-470**	200 (8x25)
❺ 	light gray	**280-471**	200 (8x25)
❺ 	dark gray	**280-472**	200 (8x25)
Push-in type jumper bar, insulated, I_N 18 A, light gray			
	2-way	**870-402**	200 (8x25)
	3-way	**870-403**	200 (8x25)
	4-way	**870-404**	100 (4x25)
	5-way	**870-405**	100 (4x25)
	6-way	**870-406**	100 (4x25)
	7-way	**870-407**	100 (4x25)
	8-way	**870-408**	100 (4x25)
	9-way	**870-409**	100 (4x25)
	10-way	**870-410**	50 (2x25)
Push-in type jumper bar, insulated, I_N 18 A, light gray			
	from 1 to 3	**870-433**	200 (8x25)
	from 1 to 4	**870-434**	200 (8x25)
	from 1 to 5	**870-435**	100 (4x25)
	from 1 to 6	**870-436**	100 (4x25)
	from 1 to 7	**870-437**	100 (4x25)
	from 1 to 8	**870-438**	100 (4x25)
	from 1 to 9	**870-439**	100 (4x25)
	from 1 to 10	**870-440**	50 (2x25)
Protective warning marker, with black high-voltage symbol, for 5 terminal blocks			
	yellow	**280-405**	100 (4x25)

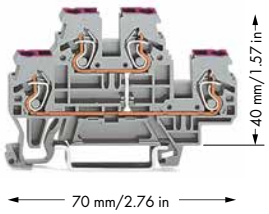

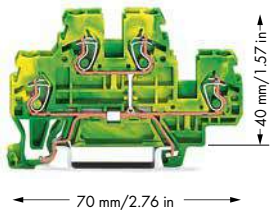

	Item No.	Pack. Unit
Double-deck terminal block, 4-conductor through terminal block, internally commoned, violet conductor entry, gray housing		
L	**870-508**	50
Double-deck terminal block, 4-conductor through terminal block, internally commoned, violet conductor entry, blue housing		
N	**870-509** ❸	50

	Item No.	Pack. Unit
Double-deck terminal block, 4-conductor ground terminal block, internally commoned, green-yellow housing		
PE	**870-507**	50

3-Conductor, Double-Deck Terminal Blocks

2.5 (4 "f-st") mm², 870 Series

0.08 ... 2.5 (4"f-st")mm² ❶ | 28 ... 12 AWG 500 V/6 kV/3 ❷ | 300 V, 20 A I_N 24 A Terminal block width 5 mm / 0.197 inch 6 ... 7 mm / 0.24 ... 0.28 inch	0.08 ... 2.5 (4"f-st")mm² ❶ | 28 ... 12 AWG 500 V/6 kV/3 ❷ I_N 24 A Terminal block width 5 mm / 0.197 inch 6 ... 7 mm / 0.24 ... 0.28 inch

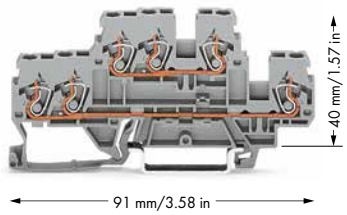

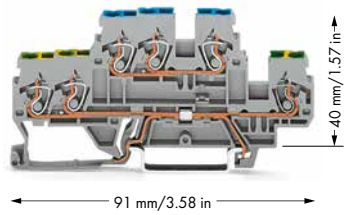

❶ Max. insulation diameter: 4.4 mm
❷ 500 V = rated voltage
6 kV = rated surge voltage
3 = pollution degree
(see Section 14)
❸ Suitable for Ex i applications
❹ See application notes for: Insulation stop, page 331

	Item No.	Pack. Unit
3-conductor, double-deck terminal block, through/through terminal block, gray housing		
L/L	870-531	50
N/L	870-532	50
L/N	870-533	50
3-conductor, double-deck terminal block, through/through terminal block, blue housing		
N/N	870-534 ❸	50

	Item No.	Pack. Unit
3-conductor, double-deck terminal block, ground conductor/through terminal block, gray housing		
PE/N	870-535	50
PE/L	870-536	50

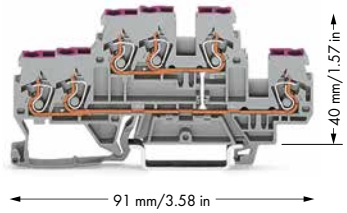

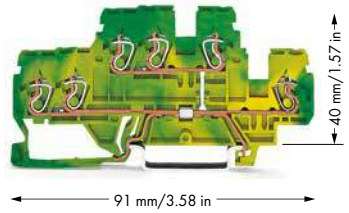

	Item No.	Pack. Unit
3-conductor, double-deck terminal block, 6-conductor through terminal block, internally commoned, violet conductor entry, gray housing		
L	870-538	50
3-conductor, double-deck terminal block, 6-conductor through terminal block, internally commoned, violet conductor entry, blue housing		
N	870-539 ❸	50

	Item No.	Pack. Unit
3-conductor, double-deck terminal block, 6-conductor ground terminal block, internally commoned, green-yellow housing		
PE	870-537	50

Accessories

WMB/WMB Inline/Mini-WSB/Mini-WSB Inline (see Section 13)

End and intermediate plate, 2 mm thick			
	orange	870-574	100 (4x25)
	gray	870-573	100 (4x25)
Insulation stop, 5 pcs/strip, 0.08 ... 0.2 mm² "s" (0.14 mm² "f-st") ❹			
	white	280-470	200 (8x25)
Insulation stop, 5 pcs/strip, 0.25 ... 0.5 mm² ❹			
	light gray	280-471	200 (8x25)
Insulation stop, 5 pcs/strip, 0.75 ... 1 mm² ❹			
	dark gray	280-472	200 (8x25)
Push-in type jumper bar, insulated, I_N 18 A, light gray			
	2-way	870-402	200 (8x25)
	3-way	870-403	200 (8x25)
	4-way	870-404	100 (4x25)
	5-way	870-405	100 (4x25)
	6-way	870-406	100 (4x25)
	7-way	870-407	100 (4x25)
	8-way	870-408	100 (4x25)
	9-way	870-409	100 (4x25)
	10-way	870-410	50 (2x25)
Push-in type jumper bar, insulated, I_N 18 A, light gray			
	from 1 to 3	870-433	200 (8x25)
	from 1 to 4	870-434	200 (8x25)
	from 1 to 5	870-435	100 (4x25)
	from 1 to 6	870-436	100 (4x25)
	from 1 to 7	870-437	100 (4x25)
	from 1 to 8	870-438	100 (4x25)
	from 1 to 9	870-439	100 (4x25)
	from 1 to 10	870-440	50 (2x25)
Protective warning marker, with black high-voltage symbol, for 5 terminal blocks			
	yellow	280-405	100 (4x25)
Marking strip, plain, 7.5 mm wide, 1 m long			
	translucent	709-196	1

Triple-Deck Terminal Blocks

2.5 (4 "f-st") mm², 870 Series

0.08 ... 2.5 (4"f-st")mm² ❶ | 28 ... 12 AWG 500 V/6 kV/3 ❷ | 300 V, 20 A I_N 24 A Terminal block width 5 mm / 0.197 inch 6 ... 7 mm / 0.24 ... 0.28 inch	0.08 ... 2.5 (4"f-st")mm² ❶ | 28 ... 12 AWG 500 V/6 kV/3 ❷ | 300 V, 20 A I_N 24 A Terminal block width 5 mm / 0.197 inch 6 ... 7 mm / 0.24 ... 0.28 inch

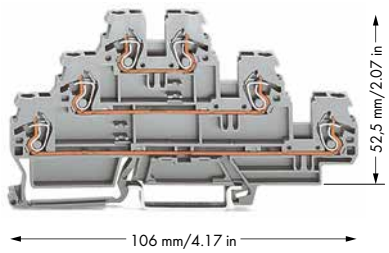

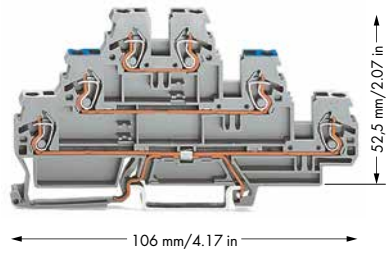

❶ Max. insulation diameter: 4.4 mm

❷ 500 V = rated voltage
6 kV = rated surge voltage
3 = pollution degree
(see Section 14)

❸ Suitable for Ex e II applications
0.2 ... 2.5 (4 "f-st") mm² / 24 ... 12 AWG
440 V, 18 A
Using 1 or more push-in type jumper bars, the maximum rated voltage is reduced to 275 V and the rated current to 13.5 A.
(see Section 14)

❹ See application notes for:
Insulation stop, page 331

	Item No.	Pack. Unit
Triple-deck terminal block, through/through/through terminal block, gray housing		
L/L/L	870-551	50
L/L/N	870-553	50
Triple-deck terminal block, through/through/through terminal block, light gray housing		
L/L/L Ex	870-951 ❸	50
Other terminal blocks with the same profile:		
Diode	870-590/281-410	Page 420
LED	870-593/281-434	Page 421

	Item No.	Pack. Unit
Triple-deck terminal block, shield conductor/through/through terminal block, gray housing		
Shield/N/L	870-558	50
Shield/L/L	870-559	50
Triple-deck terminal block, ground conductor/through/through terminal block, gray housing		
PE/N/L	870-567	50
PE/L/L	870-577	50
Triple-deck terminal block, ground conductor/through/through terminal block, light gray housing		
PE/L/L Ex	870-957/999-950 ❸	50

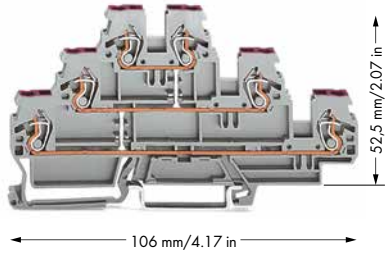

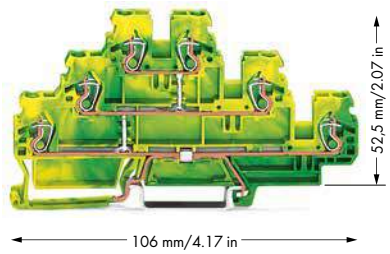

	Item No.	Pack. Unit
Triple-deck terminal block, 6-conductor through terminal block, internally commoned, violet conductor entry, gray housing		
L	870-556	50

	Item No.	Pack. Unit
Triple-deck terminal block, 6-conductor ground terminal block, internally commoned, green-yellow housing		
PE	870-557	50

Accessories

WMB/WMB Inline/Mini-WSB/Mini-WSB Inline (see Section 13)

End and intermediate plate, 2 mm thick



	Item No.	Pack. Unit
orange	870-569	50 (2x25)
gray	870-568	50 (2x25)

Insulation stop, 5 pcs/strip, 0.08 ... 0.2 mm² "s" (0.14 mm² "f-st") ❹



	Item No.	Pack. Unit
white	280-470	200 (8x25)

Insulation stop, 5 pcs/strip, 0.25 ... 0.5 mm² ❹



	Item No.	Pack. Unit
light gray	280-471	200 (8x25)

Insulation stop, 5 pcs/strip, 0.75 ... 1 mm² ❹



	Item No.	Pack. Unit
dark gray	280-472	200 (8x25)

Push-in type jumper bar, insulated, I_N 18 A, light gray



	Item No.	Pack. Unit
2-way	870-402	200 (8x25)
3-way	870-403	200 (8x25)
4-way	870-404	100 (4x25)
5-way	870-405	100 (4x25)
6-way	870-406	100 (4x25)
7-way	870-407	100 (4x25)
8-way	870-408	100 (4x25)
9-way	870-409	100 (4x25)
10-way	870-410	50 (2x25)

Push-in type jumper bar, insulated, I_N 18 A, light gray



	Item No.	Pack. Unit
from 1 to 3	870-433	200 (8x25)
from 1 to 4	870-434	200 (8x25)
from 1 to 5	870-435	100 (4x25)
from 1 to 6	870-436	100 (4x25)
from 1 to 7	870-437	100 (4x25)
from 1 to 8	870-438	100 (4x25)
from 1 to 9	870-439	100 (4x25)
from 1 to 10	870-440	50 (2x25)

Protective warning marker, with black high-voltage symbol, for 5 terminal blocks



	Item No.	Pack. Unit
yellow	280-405	100 (4x25)

Marking strip, plain, 7.5 mm wide, 1 m long

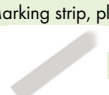

	Item No.	Pack. Unit
translucent	709-196	1

Group Marker Carriers

Group marker carrier



	Item No.	Pack. Unit
Group marker carrier, fits into terminal block jumper slots- Module width 5 mm		
gray	**870-184**	50 (2x25)
Group marker carrier, fits into terminal block jumper slots- Module width 10 mm		
gray	**870-183**	50 (2x25)
Group marker carrier, fits into terminal block jumper slots- Module width 15 mm		
gray	**870-182**	50 (2x25)



In addition to the plastic marker strips, group marker carriers are now available for the WMB and WSB marking systems. They can be mounted parallel to a push-in type jumper bar via open jumper contact slot. It assists with viewing marker slots on the side of the terminal block. Group marker carriers are available in 5 mm/0.197 inch, 10 mm/0.394 inch and 15 mm/0.591 inch widths.

Notice:
Marker carriers are not suitable for ground conductor terminal blocks and double-potential terminal blocks as they have no jumper contact slots.

Double-Deck Diode Terminal Blocks and LED Terminal Blocks

2.5 (4 "f-st") mm², 870 Series

0.08 ... 2.5 (4"f-st")mm² ❶ | 28 ... 12 AWG U_N 250 V, U_{RM} 1000 V 1N4007 - 0.5 A continuous current Terminal block width 5 mm / 0.197 inch 6 ... 7 mm / 0.24 ... 0.28 inch	0.08 ... 2.5 (4"f-st")mm² ❶ | 28 ... 12 AWG U_N 250 V, U_{RM} 1000 V 1N4007 - 0.5 A continuous current Terminal block width 5 mm / 0.197 inch 6 ... 7 mm / 0.24 ... 0.28 inch	0.08 ... 2.5 (4"f-st")mm² ❶ | 28 ... 12 AWG 24 VDC I_F 0.025 A max. Terminal block width 5 mm / 0.197 inch 6 ... 7 mm / 0.24 ... 0.28 inch

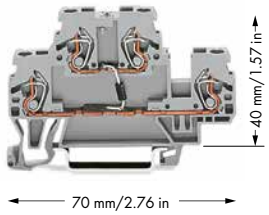

870-540/281-410 870-540/281-411

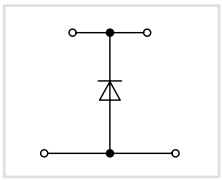

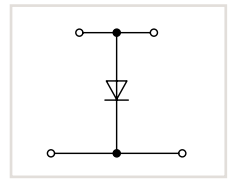

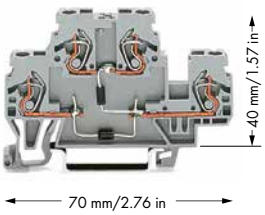

870-541/281-492 870-541/281-491

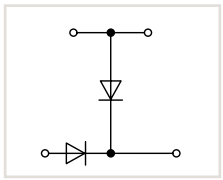

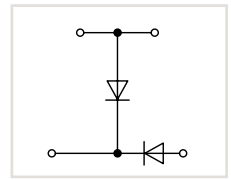

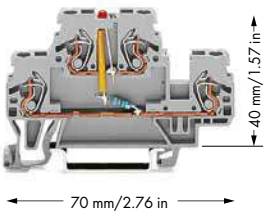

870-543/281-434 870-543/281-413

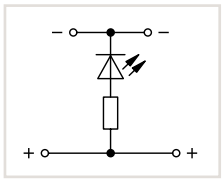

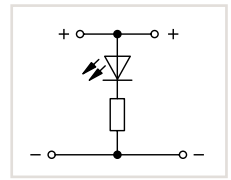

	Item No.	Pack. Unit
Double-deck diode terminal block, with 1N4007 diode		
gray	**870-540/281-410**	50
gray	**870-540/281-411**	50

	Item No.	Pack. Unit
Double-deck diode terminal block, with two 1N4007 diodes		
gray	**870-541/281-492**	50
gray	**870-541/281-491**	50

	Item No.	Pack. Unit
Double-deck LED terminal block, with red LED		
gray	**870-543/281-434**	50
gray	**870-543/281-413**	50

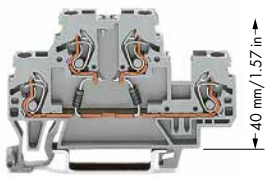

870-542/281-487 870-542/281-488

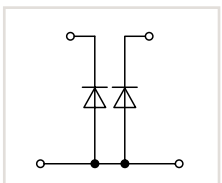

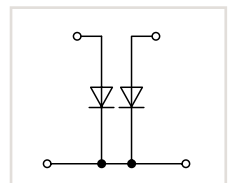

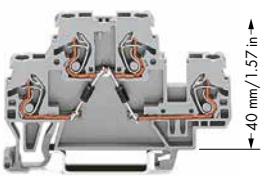

870-541/281-489 870-541/281-490

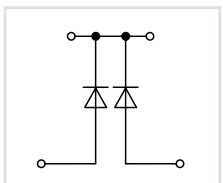

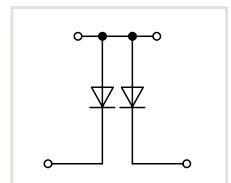

	Item No.	Pack. Unit
Double-deck diode terminal block, with two 1N4007 diodes		
gray	**870-542/281-487**	50
gray	**870-542/281-488**	50

	Item No.	Pack. Unit
Double-deck diode terminal block, with two 1N4007 diodes		
gray	**870-541/281-489**	50
gray	**870-541/281-490**	50

Through terminal blocks with same profile, see page 414

Double-Deck Diode Terminal Blocks and LED Terminal Blocks

Circuit Configuration Examples

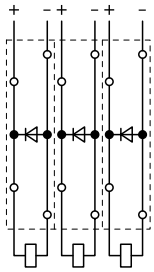

Recovery diodes can be created using the following terminal blocks:
870-540/281-410 or 870-540/281-411

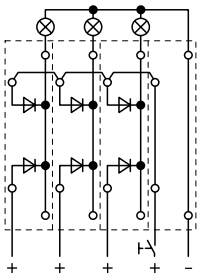

Lamp test circuits can be created using the following terminal blocks:
870-542/281-487 or 870-542/281-488

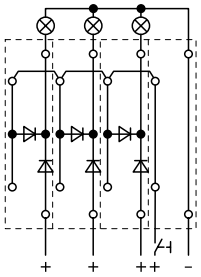

Lamp test circuits can be created using the following terminal blocks:
870-541/281-492 or 870-541/281-491

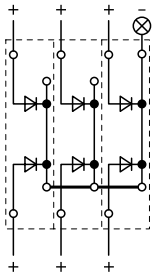

Collective fault signals can be created using the following terminal blocks:
870-541/281-489 or 870-541/281-490

Double-deck diode terminal blocks were specifically developed for custom diode circuits, such as lamp test and collective fault signal circuits.
Designing monitoring units via LED terminal blocks (e.g., for control and operating circuits).

These terminal blocks provide high-density wiring in a width of just 5 mm.

Push-in type jumper bars provide additional options for custom circuit design.

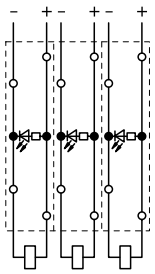

Circuit-related voltage indications can be created using the following terminal blocks:
870-543/281-434 or 870-543/281-413

❶ Max. insulation diameter: 4.4 mm

❷ See application notes for:
Insulation stop, page 331

870 Series Accessories

WMB/WMB Inline/Mini-WSB/Mini-WSB Inline (see Section 13)

End and intermediate plate, 2 mm thick			
	orange	**870-519**	100 (4x25)
	gray	**870-518**	100 (4x25)
Insulation stop, 5 pcs/strip, 0.08 ... 0.2 mm² "s" (0.14 mm² "f-st") ❷			
	white	**280-470**	200 (8x25)
Insulation stop, 5 pcs/strip, 0.25 ... 0.5 mm² ❷			
	light gray	**280-471**	200 (8x25)
Insulation stop, 5 pcs/strip, 0.75 ... 1 mm² ❷			
	dark gray	**280-472**	200 (8x25)
Push-in type jumper bar, insulated, I_N 18 A, light gray			
	2-way	**870-402**	200 (8x25)
	3-way	**870-403**	200 (8x25)
	4-way	**870-404**	100 (4x25)
	5-way	**870-405**	100 (4x25)
	6-way	**870-406**	100 (4x25)
	7-way	**870-407**	100 (4x25)
	8-way	**870-408**	100 (4x25)
	9-way	**870-409**	100 (4x25)
	10-way	**870-410**	50 (2x25)
Push-in type jumper bar, insulated, I_N 18 A, light gray			
	from 1 to 3	**870-433**	200 (8x25)
	from 1 to 4	**870-434**	200 (8x25)
	from 1 to 5	**870-435**	100 (4x25)
	from 1 to 6	**870-436**	100 (4x25)
	from 1 to 7	**870-437**	100 (4x25)
	from 1 to 8	**870-438**	100 (4x25)
	from 1 to 9	**870-439**	100 (4x25)
	from 1 to 10	**870-440**	50 (2x25)
Protective warning marker, with black high-voltage symbol, for 5 terminal blocks			
	yellow	**280-405**	100 (4x25)

7

Trible-Deck Diode Terminal Blocks and LED Terminal Blocks

2.5 (4 "f-st") mm², 870 Series

0.08 ... 2.5 (4"f-st")mm² ❶ | 28 ... 12 AWG **U_N 250 V, U_{RM} 1000 V** **1N4007 - 0.5 A continuous current** **Terminal block width 5 mm / 0.197 inch** **6 ... 7 mm / 0.24 ... 0.28 inch**	**0.08 ... 2.5 (4"f-st")mm² ❶ | 28 ... 12 AWG** **U_N 250 V, U_{RM} 1000 V** **1N4007 - 0.5 A continuous current** **Terminal block width 5 mm / 0.197 inch** **6 ... 7 mm / 0.24 ... 0.28 inch**	**0.08 ... 2.5 (4"f-st")mm² ❶ | 28 ... 12 AWG** **U_N 250 V, U_{RM} 1000 V** **1N4007 - 0.5 A continuous current** **Terminal block width 5 mm / 0.197 inch** **6 ... 7 mm / 0.24 ... 0.28 inch**

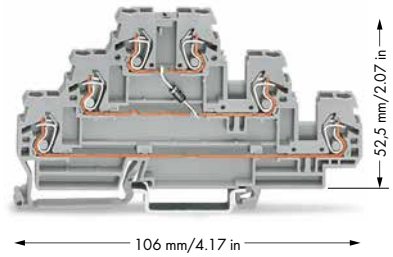

870-590/281-410 870-590/281-411

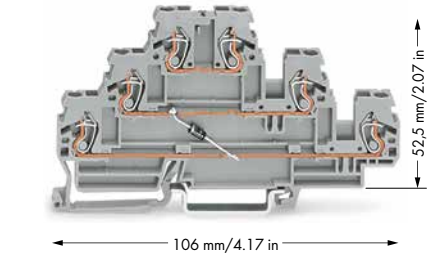

870-590/281-675 870-590/281-676

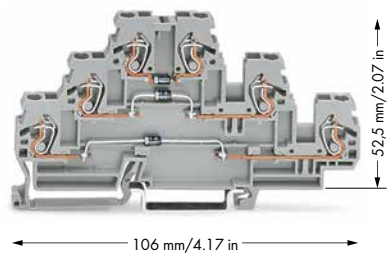

870-596/281-673 870-596/281-674

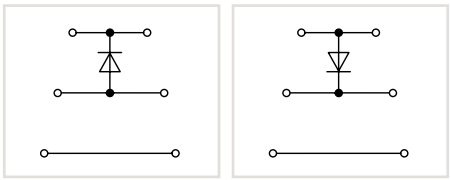

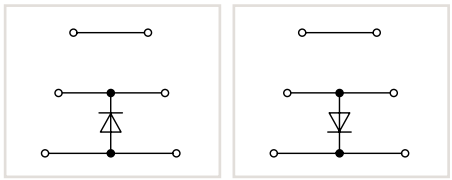

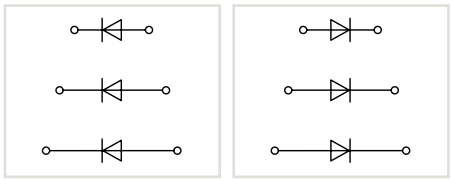

7

Item No.		Pack. Unit
Triple-deck diode terminal block, with 1N4007 diode		
gray	**870-590/281-410**	50
gray	**870-590/281-411**	50
Other terminal blocks with the same profile:		
Through	**870-551**	Page 416

Item No.		Pack. Unit
Triple-deck diode terminal block, with 1N4007 diode		
gray	**870-590/281-675**	50
gray	**870-590/281-676**	50

Item No.		Pack. Unit
Triple-deck diode terminal block, with three 1N4007 diodes		
gray	**870-596/281-673**	50
gray	**870-596/281-674**	50

870 Series Accessories

Appropriate marking systems: WMB/WMB Inline/Mini-WSB/Mini-WSB Inline (see Section 13)

End and intermediate plate, 2 mm thick			
	orange	**870-569**	50 (2x25)
	gray	**870-568**	50 (2x25)
Insulation stop, 5 pcs/strip, 0.08 ... 0.2 mm² "s" (0.14 mm² "f-st") ❷			
	white	**280-470**	200 (8x25)
Insulation stop, 5 pcs/strip, 0.25 ... 0.5 mm² ❷			
	light gray	**280-471**	200 (8x25)
Insulation stop, 5 pcs/strip, 0.75 ... 1 mm² ❷			
	dark gray	**280-472**	200 (8x25)
Push-in type jumper bar, insulated, I_N 18 A, light gray			
	2-way	**870-402**	200 (8x25)
	3-way	**870-403**	200 (8x25)
	4-way	**870-404**	100 (4x25)
	5-way	**870-405**	100 (4x25)
	6-way	**870-406**	100 (4x25)
	7-way	**870-407**	100 (4x25)
	8-way	**870-408**	100 (4x25)
	9-way	**870-409**	100 (4x25)
	10-way	**870-410**	50 (2x25)

Push-in type jumper bar, insulated, I_N 18 A, light gray			
	from 1 to 3	**870-433**	200 (8x25)
	from 1 to 4	**870-434**	200 (8x25)
	from 1 to 5	**870-435**	100 (4x25)
	from 1 to 6	**870-436**	100 (4x25)
	from 1 to 7	**870-437**	100 (4x25)
	from 1 to 8	**870-438**	100 (4x25)
	from 1 to 9	**870-439**	100 (4x25)
	from 1 to 10	**870-440**	50 (2x25)
Protective warning marker, with black high-voltage symbol, for 5 terminal blocks			
	yellow	**280-405**	100 (4x25)
Mini-WSB Quick marking system, white, 10 strips with 10 markers per card, 5 mm wide markers			
	plain	**248-501**	5
WMB Multi marking system, white, 10 strips with 10 markers per card, 5 ... 5.2 mm stretchable			
	plain	**793-5501**	5
WMB Multi marking system, white, 10 strips with 10 markers per card, for 5 ... 17.5 mm terminal block width			
	plain	**793-501**	5

Mini-WSB Quick marking system, plain, 10 strips with 10 markers per card, 5 mm wide markers		
	yellow	**248-501/000-002**
	red	**248-501/000-005**
	blue	**248-501/000-006**
	gray	**248-501/000-007**
	orange	**248-501/000-012**
	light green	**248-501/000-017**
	green	**248-501/000-023**
	violet	**248-501/000-024**
		5
WMB Multi marking system, plain, 10 strips with 10 markers per card, for 5 ... 17.5 mm terminal block width		
	yellow	**793-501/000-002**
	red	**793-501/000-005**
	blue	**793-501/000-006**
	gray	**793-501/000-007**
	orange	**793-501/000-012**
	light green	**793-501/000-017**
	green	**793-501/000-023**
	violet	**793-501/000-024**
		5

0.08 ... 2.5 (4"f-st")mm² ❶ | 28 ... 12 AWG
24 VDC
I_F 0.025 A max.

Terminal block width 5 mm / 0.197 inch
6 ... 7 mm / 0.24 ... 0.28 inch

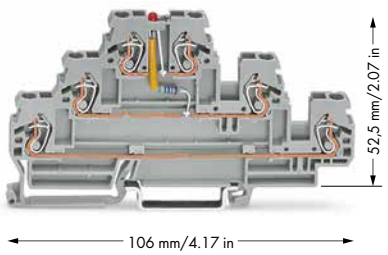

870-593/281-434

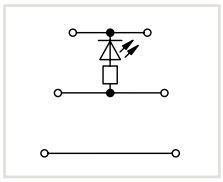

870-593/281-413

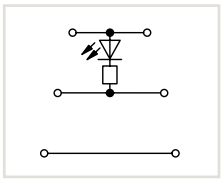

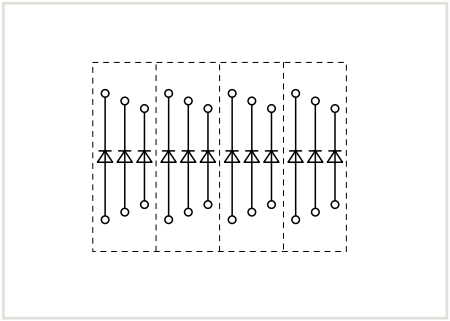

Triple-deck diode terminal blocks were specifically developed for custom diode circuits, such as lamp test and collective fault signal circuits.
Designing monitoring units via LED terminal blocks (e.g., for control and operating circuits).

These terminal blocks provide high-density wiring in a width of just 5 mm.

Push-in type jumper bars provide additional options for custom circuit design.

❶ Max. insulation diameter: 4.4 mm
❷ See application notes for: Insulation stop, page 331

	Item No.	Pack. Unit
Triple-deck LED terminal block, with red LED		
gray	**870-593/281-434**	50
gray	**870-593/281-413**	50

WMB Multi marking system, plain, 10 strips with 10 markers per card, 5 ... 5.2 mm stretchable



yellow	**793-5501/000-002**
red	**793-5501/000-005**
blue	**793-5501/000-006**
gray	**793-5501/000-007**
orange	**793-5501/000-012**
light green	**793-5501/000-017**
green	**793-5501/000-023**
violet	**793-5501/000-024**

5

Pluggable Tap-Off Modules, 870 Series

Description and Installation

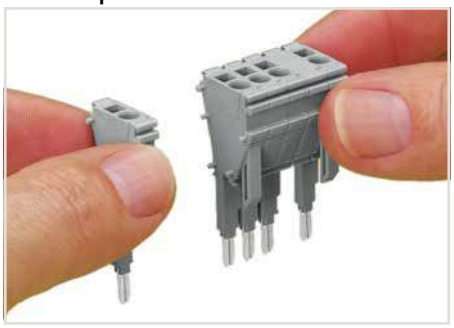

Snapping tap-off and spacer modules together to assemble a multipole tap-off module (max. 10 poles).



Module assembly with CAGE CLAMP® connections (0.25 … 2.5 mm²/24 … 14 AWG), including strain relief plate and marker slots for Mini-WSB or WMB markers.

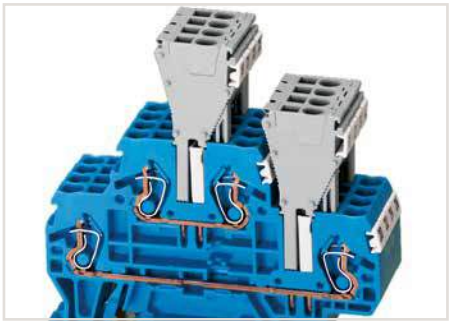

The tap-off module assembly can be directly plugged into the jumper contact slot of the current bar. The terminal blocks can also be commoned via push-in type jumper bars parallel to the jumper slots being used by the modules.

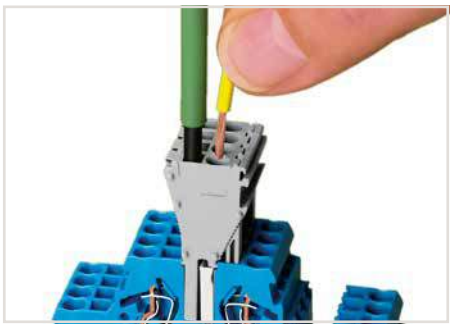

CAGE CLAMP® connection
Tap-off modules are used when additional or removable connections are required (can be used as a permanent connection or a test plug).
Wiring is possible whether the modules are plugged into the assembly or not.

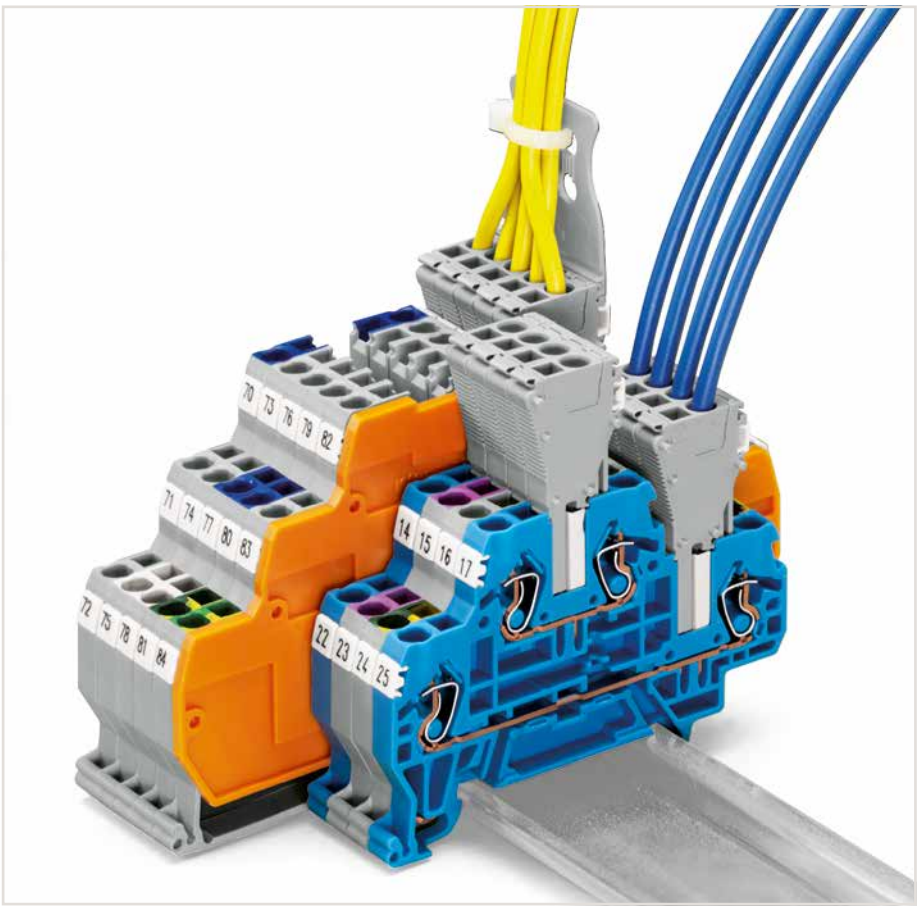

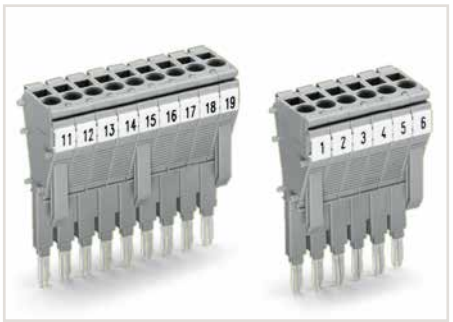

Using anti-reverse mating modules at both ends of a module assembly prevents reverse mating.



Three anti-reverse mating modules are necessary when snapping more than seven modules together.

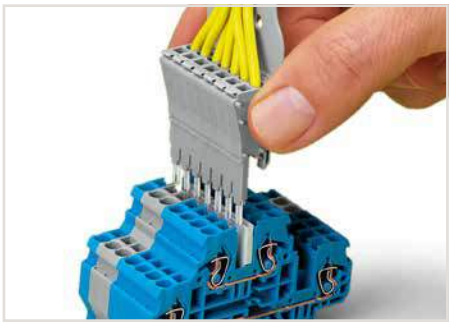

Testing is also possible using a pre-wired tap-off module assembly in the very same way as test plugs.



CAGE CLAMP® terminates the following copper conductors:
solid



stranded



fine-stranded, also with tinned single strands

Pluggable Tap-Off Modules

870 Series

0.25 … 2.5 mm² | 22 … 14 AWG 500 V/6 kV/3 ❶ I_N 18 A Module width 5 mm / 0.197 inch 10 mm / 0.38 inch	0.25 … 2.5 mm² | 22 … 14 AWG 500 V/6 kV/3 ❶ I_N 10 A Module width 5 mm / 0.197 inch 10 mm / 0.38 inch





❶ 500 V = rated voltage
6 kV = rated surge voltage
3 = pollution degree
(see Section 14)

	Item No.	Pack. Unit
Tap-off module, with anti-reverse mating protection, snaps together, for 870 Series rail-mount terminal blocks with jumper slots in the current bar		
gray	**870-425**	100 (4x25)

	Item No.	Pack. Unit
Tap-off module, snaps together, for 870 Series rail-mount terminal blocks with jumper slots in the current bar		
gray	**870-426**	100 (4x25)
Spacer module, snaps together, bridges terminal blocks		
gray	**870-427**	100 (4x25)

WAGO has developed modular, pluggable tap-off modules for additional wire connections, as well as serial testing on terminal block assemblies.
Multipole tap-off modules readily adapt to terminal block assemblies using spacer modules, if necessary (see left page).
The modules make direct contact to the jumper contact slots of the terminal blocks to be tested/tapped, even though a push-in type jumper bar is already being used.

Accessories

		Item No.	Pack. Unit
Mini-WSB Quick marking system, white, 10 strips with 10 markers per card, 5 mm wide markers			
	plain	**248-501**	5
WMB Multi marking system, white, 10 strips with 10 markers per card, 5 … 5.2 mm stretchable			
	plain	**793-5501**	5
WMB Multi marking system, white, 10 strips with 10 markers per card, for 5 … 17.5 mm terminal block width			
	plain	**793-501**	5
Strain relief plate, gray			
	35 mm wide	**734-326**	100 (4x25)
	6 mm wide	**734-327**	100 (4x25)
	12.5 mm wide	**734-328**	100 (4x25)
	25 mm wide	**734-329**	100 (4x25)

Sensor and Actuator Terminal Blocks, 270 Series

Description and Installation

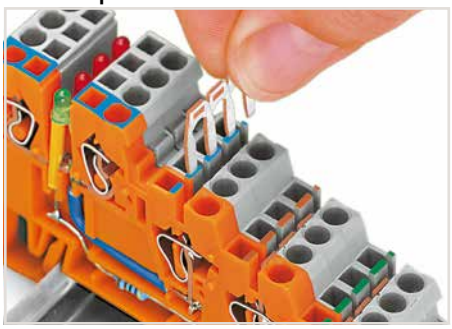

Inserting a jumper.

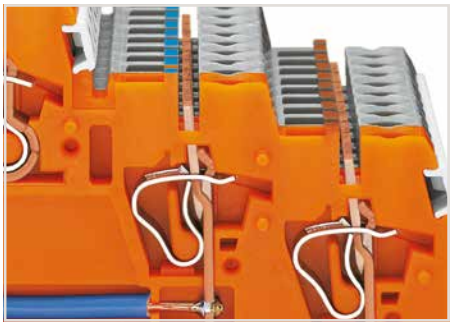

Commoning a supply voltage using uninsulated push-in type jumper bars, 2- to 9-way or 17-way (2 x 8 bits), depending on application.



Commoning signal level voltage via insulated push-in type jumper bars (870 Series) –
2- to 9-way, depending on application.
Sensor LED terminal blocks cannot be commoned!



Terminal block assembly:
Sensor terminal blocks

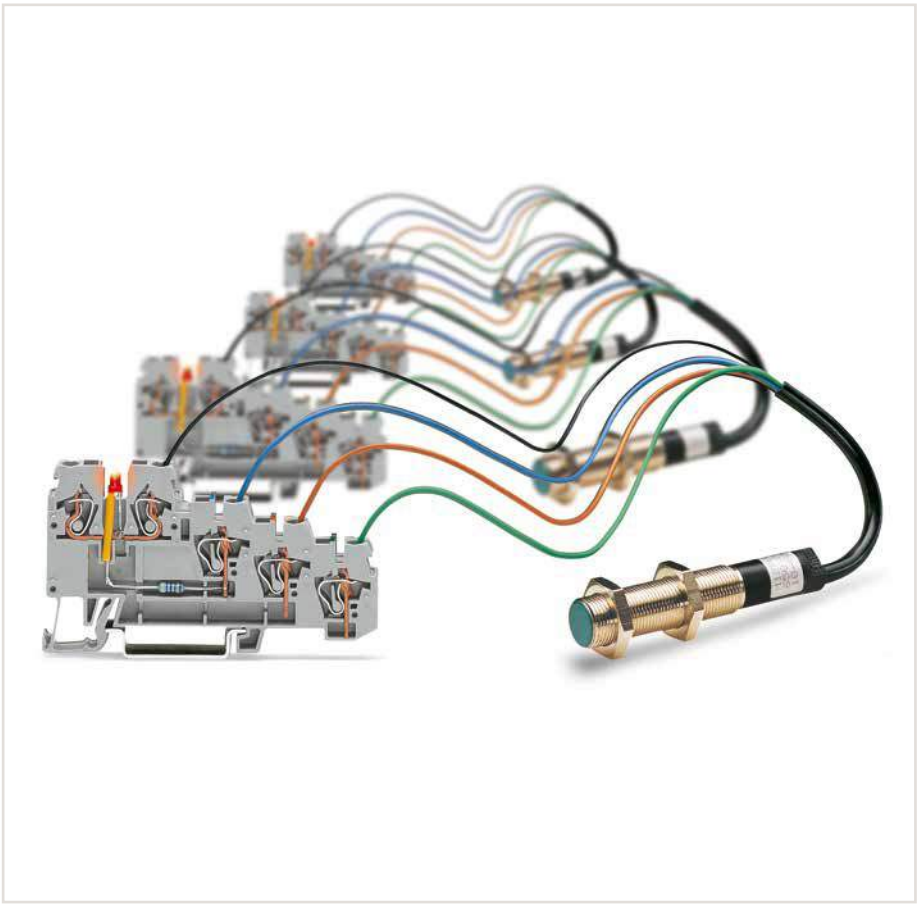



Terminal block assembly:
Sensor LED terminal blocks



Marking strip (Item No. 709-196)
Not suitable for LED terminal blocks!

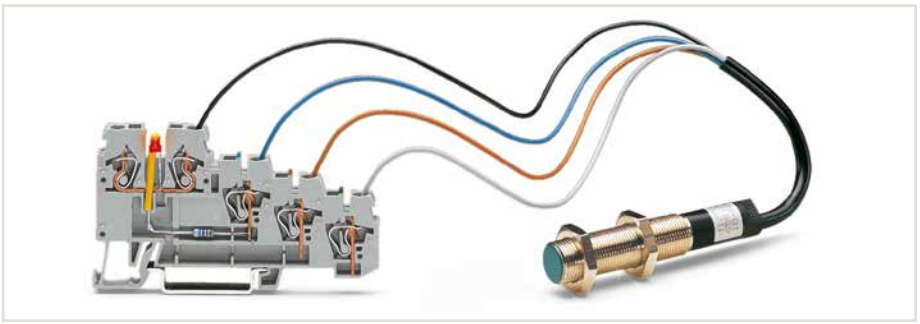

Sensor LED block

CAGE CLAMP® terminates the following copper conductors:					
solid	stranded	fine-stranded, also with tinned single strands	fine-stranded, tip-bonded	fine-stranded, with ferrule (gastight crimped)	fine-stranded, with pin terminal (gastight crimped)

For aluminum conductors, see notes in Section 14. When using ferrules, the max. conductor cross section accommodated is one size smaller than max. rating of terminal block.

4-Conductor Sensor Terminal Blocks and 4-Conductor Sensor LED Terminal Blocks

2.5 mm², 270 Series

0.08 … 2.5 mm² | 28 … 12 AWG*	0.08 … 2.5 mm² | 28 … 12 AWG*
250 V/4 kV/3 ❶ | 300 V, 20 A	24 VDC ❸
I_N 18 A ❷ | 300 V, 10 A	
Terminal block width 5 mm / 0.197 inch	Terminal block width 5 mm / 0.197 inch
6 … 7 mm / 0.24 … 0.28 inch	6 … 7 mm / 0.24 … 0.28 inch

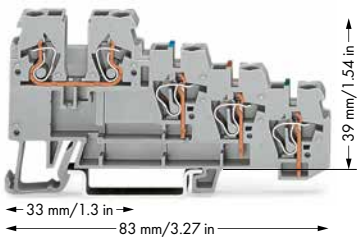

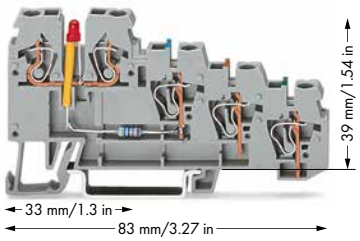

270-570/281-434

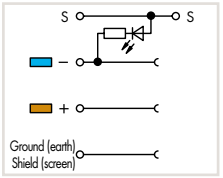

270-570/281-507

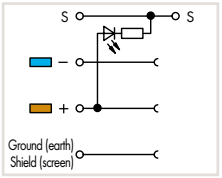

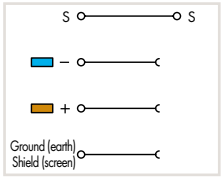

* 12 AWG: THHN, THWN

❶ 250 V = rated voltage
4 kV = rated surge voltage
3 = pollution degree
(see Section 14)

❷ Internal bridge: 9 A

❸ Other voltages are available upon request.
LED power consumption: 4.8 mA

❹ See application notes for:
Insulation stop, page 331

	Item No.	Pack. Unit
4-conductor sensor terminal block, for DIN-35 rail		
gray	**270-570**	50

	Item No.	Pack. Unit
4-conductor sensor LED terminal block, for DIN-35 rail, for PNP (high-side) switching sensors, red LED		
gray	**270-570/281-434**	50
4-conductor sensor LED terminal block, for DIN-35 rail, for NPN (low-side) switching sensors, yellow LED		
gray	**270-570/281-507**	50

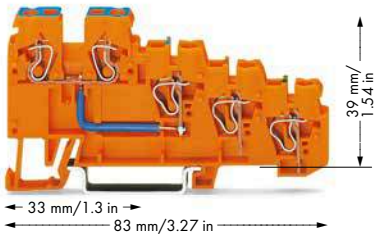

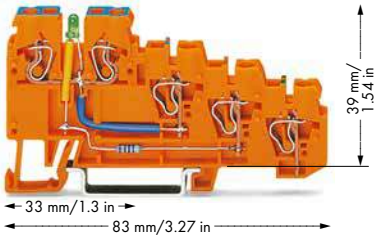

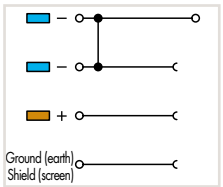

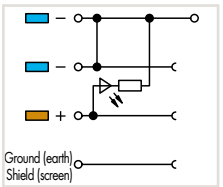

	Item No.	Pack. Unit
4-conductor sensor supply terminal block, for DIN-35 rail, internal bridge 9 A		
orange	**270-574**	10

	Item No.	Pack. Unit
4-conductor sensor LED supply terminal block, for DIN-35 rail, green LED		
orange	**270-574/281-483**	10

Accessories for 4-Conductor Terminal Blocks

WMB/WMB Inline/Mini-WSB/Mini-WSB Inline

End and intermediate plate, 1 mm thick, for quadruple-deck terminal blocks



orange	**270-322**	100 (4x25)
gray	**270-320**	100 (4x25)

Insulation stop, 5 pcs/strip, 0.08 … 0.2 mm² "s" (0.14 mm² "f-st") ❹



white	**280-470**	200 (8x25)

Insulation stop, 5 pcs/strip, 0.25 … 0.5 mm² ❹



light gray	**280-471**	200 (8x25)

Insulation stop, 5 pcs/strip, 0.75 … 1 mm² ❹



dark gray	**280-472**	200 (8x25)

Jumper, uninsulated, I_N 18 A Jumpers can be shortened using an electronic side cutter



9-way	**270-409**	100 (4x25)
17-way	**270-417**	100 (4x25)
80-way	**270-480**	10

Push-in type jumper bar, insulated, I_N 18 A, light gray



2-way	**870-402**	200 (8x25)
3-way	**870-403**	200 (8x25)
4-way	**870-404**	100 (4x25)
5-way	**870-405**	100 (4x25)
6-way	**870-406**	100 (4x25)
7-way	**870-407**	100 (4x25)
8-way	**870-408**	100 (4x25)
9-way	**870-409**	100 (4x25)

Operating tool with a partially insulated shaft, type 2, (3.5 x 0.5) mm blade



	210-720	1

Mini-WSB Quick marking system, white, 10 strips with 10 markers per card, 5 mm wide markers



plain	**248-501**	5

WMB Multi marking system, white, 10 strips with 10 markers per card, 5 … 5.2 mm stretchable

plain	**793-5501**	5

7

3-Conductor Sensor Terminal Blocks and 3-Conductor Sensor LED Terminal Blocks

2.5 mm², 270 Series

0.08 … 2.5 mm² | 28 … 12 AWG* 250 V/4 kV/3 ❶ | 300 V, 20 A I_N 18 A | 300 V, 10 A Terminal block width 5 mm / 0.197 inch 6 … 7 mm / 0.24 … 0.28 inch	0.08 … 2.5 mm² | 28 … 12 AWG* 24 VDC ❷ Terminal block width 5 mm / 0.197 inch 6 … 7 mm / 0.24 … 0.28 inch	0.08 … 2.5 mm² | 28 … 12 AWG* 24 VDC ❷ Terminal block width 5 mm / 0.197 inch 6 … 7 mm / 0.24 … 0.28 inch

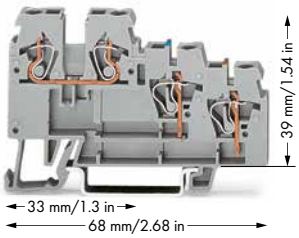

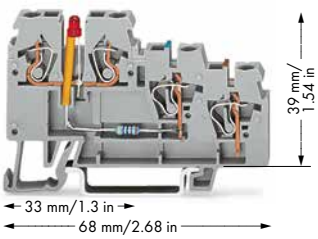

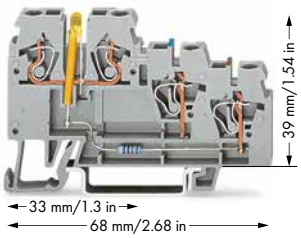



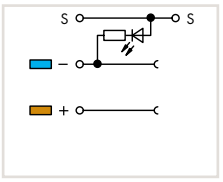

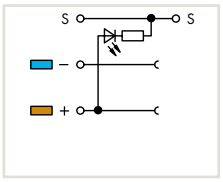

7

Item No.		Pack. Unit
3-conductor sensor terminal block, for DIN-35 rail		
gray	**270-560**	50

Item No.		Pack. Unit
3-conductor sensor LED terminal block, for DIN-35 rail, for PNP (high-side) switching sensors, red LED		
gray	**270-560/281-434**	50

Item No.		Pack. Unit
3-conductor sensor LED terminal block, for DIN-35 rail, for NPN (low-side) switching sensors, yellow LED		
gray	**270-560/281-507**	50

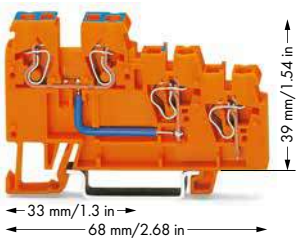

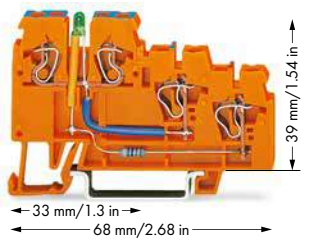

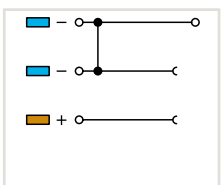

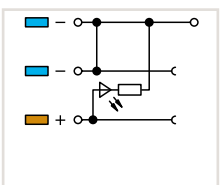

Item No.		Pack. Unit
3-conductor sensor supply terminal block, for DIN-35 rail, internal bridge 9 A		
orange	**270-564**	10

Item No.		Pack. Unit
3-conductor sensor LED supply terminal block, for DIN-35 rail, green LED		
orange	**270-564/281-483**	10

Tap-off modules (870-425, 870-426, 870-427) also suitable for signal level.

Overview of certification organizations, see page 654

CAGE CLAMP®

3-Conductor Actuator Terminal Blocks and 3-Conductor Actuator LED Terminal Blocks

2.5 mm², 270 Series

0.08 ... 2.5 mm² | 28 ... 12 AWG*	0.08 ... 2.5 mm² | 28 ... 12 AWG*
250 V/4 kV/3 ❶ | 300 V, 20 A	24 VDC ❷
I_N 18 A | 300 V, 10 A	
Terminal block width 5 mm / 0.197 inch	Terminal block width 5 mm / 0.197 inch
6 ... 7 mm / 0.24 ... 0.28 inch	6 ... 7 mm / 0.24 ... 0.28 inch

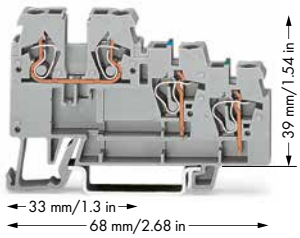

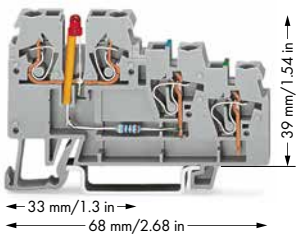

270-572 270-585

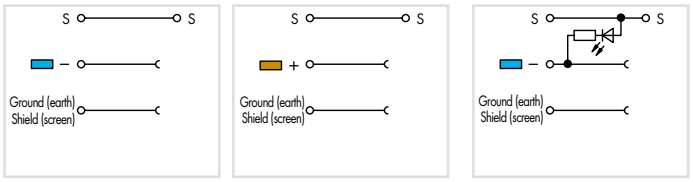

* 12 AWG: THHN, THWN

❶ 250 V = rated voltage
4 kV = rated surge voltage
3 = pollution degree
(see Section 14)

❷ Other voltages are available upon request.
LED power consumption: 4.8 mA

❸ See application notes for:
Insulation stop, page 331

Item No.	Pack. Unit	Item No.	Pack. Unit
3-conductor actuator terminal block, for DIN-35 rail		3-conductor actuator LED terminal block, for DIN-35 rail, for PNP (high-side) switching actuators, red LED	
gray **270-572**	50	gray **270-572/281-434**	50
3-conductor actuator terminal block, for DIN-35 rail			
gray **270-585**	50		

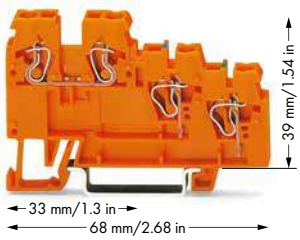

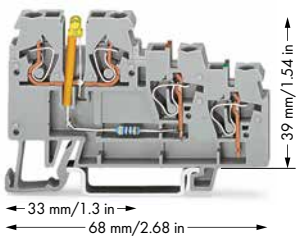

270-577 270-586

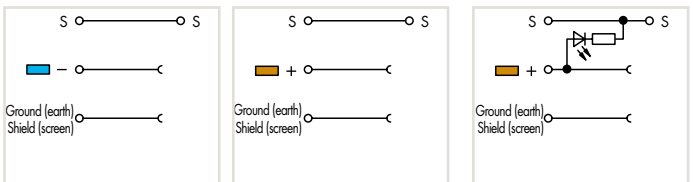

Item No.	Pack. Unit	Item No.	Pack. Unit
3-conductor actuator supply terminal block, for DIN-35 rail		3-conductor actuator LED terminal block, for DIN-35 rail, for NPN (low-side) switching actuators, yellow LED	
orange **270-577**	10	gray **270-585/281-507**	50
3-conductor actuator supply terminal block, for DIN-35 rail			
orange **270-586**	10		

Accessories for 3-Conductor Terminal Blocks

WMB/WMB Inline/Mini-WSB/Mini-WSB Inline

End and intermediate plate, 1 mm thick, for triple-deck terminal blocks			
	orange	**270-321**	100 (4x25)
	gray	**270-319**	100 (4x25)
Insulation stop, 5 pcs/strip, 0.08 ... 0.2 mm² "s" (0.14 mm² "f-st") ❸			
	white	**280-470**	200 (8x25)
Insulation stop, 5 pcs/strip, 0.25 ... 0.5 mm² ❸			
	light gray	**280-471**	200 (8x25)
Insulation stop, 5 pcs/strip, 0.75 ... 1 mm² ❸			
	dark gray	**280-472**	200 (8x25)
Jumper, uninsulated, I_N 18 A Jumpers can be shortened using an electronic side cutter			
	9-way	**270-409**	100 (4x25)
	17-way	**270-417**	100 (4x25)
	80-way	**270-480**	10
Push-in type jumper bar, insulated, I_N 18 A, light gray			
	2-way	**870-402**	200 (8x25)
	3-way	**870-403**	200 (8x25)
	4-way	**870-404**	100 (4x25)
	5-way	**870-405**	100 (4x25)
	6-way	**870-406**	100 (4x25)
	7-way	**870-407**	100 (4x25)
	8-way	**870-408**	100 (4x25)
	9-way	**870-409**	100 (4x25)
Operating tool with a partially insulated shaft, type 2, (3.5 x 0.5) mm blade		**210-720**	1
Mini-WSB Quick marking system, white, 10 strips with 10 markers per card, 5 mm wide markers			
	plain	**248-501**	5
WMB Multi marking system, white, 10 strips with 10 markers per card, 5 ... 5.2 mm stretchable			
	plain	**793-5501**	5

7

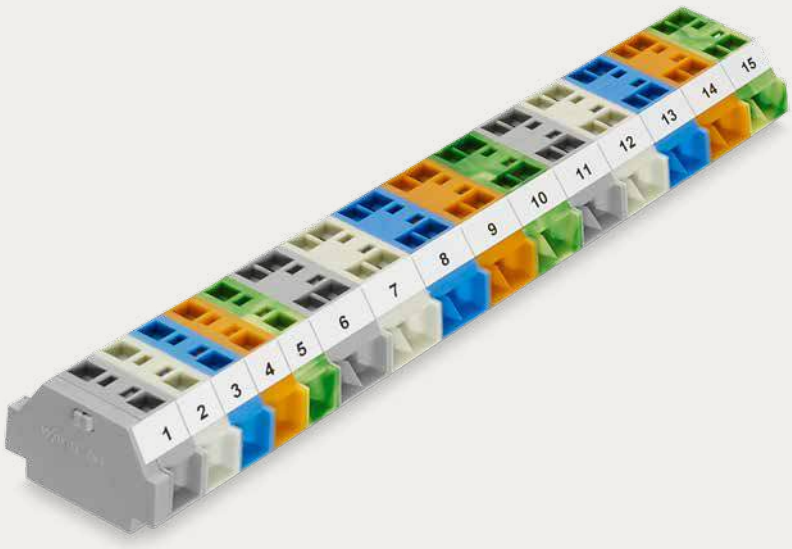

Modular Terminal Blocks and Terminal Strips

CAGE CLAMP®

Modular Terminal Blocks and Terminal Strips

Side-/Front-Entry Wiring

			Page
	**Modular Terminal Blocks and Terminal Strips with Mounting Flanges or Snap-In Mounting Feet, Front-Entry Wiring** 2.5 (4 "f-st") mm² (12 AWG)	869 Series	431
	**Modular Terminal Blocks and Terminal Strips with Mounting Flanges or Snap-In Mounting Feet, Front-Entry Wiring** 2.5 mm² (12 AWG)	264 Series	436
	**Modular Terminal Blocks and Terminal Strips with Mounting Flanges or Snap-In Mounting Feet, Side-Entry Wiring** 0.08 … 1.5 mm² (28 … 16 AWG) / 2.5 mm² / 4 mm² (14 AWG / 12 AWG)	260/261/262 Series	442
	**Modular Terminal Blocks and Terminal Strips with Push-Buttons on One or Both Sides** 0.08 … 1.5 mm² (28 … 16 AWG)	261 Series	446
	**Modular Terminal Blocks and Terminal Strips with Mini-WSB Marker Slot and Push-Buttons on One or Both Sides** 1.5 mm² (16 AWG)	261 Series	450
	**Accessories for Modular Terminal Blocks and Terminal Strips**	260/261/262 Series	456

8

Modular Terminal Blocks and Terminal Strips, 869 Series

Description and Installation

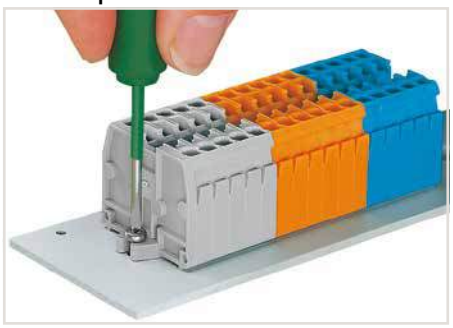

Mounting and securing a terminal strip directly to the plate via screw-type flanges.

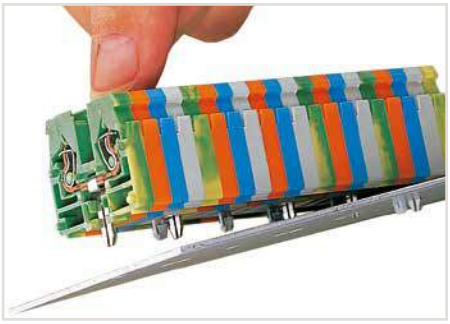

Mounting a terminal strip with snap-in feet into holes.

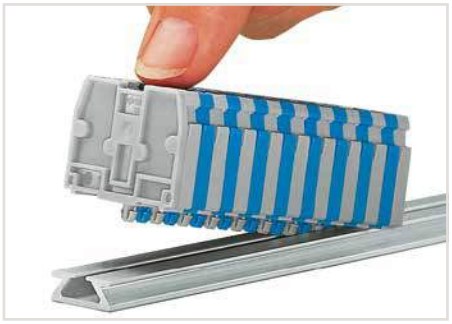

Mounting a terminal strip with snap-in feet onto aluminum rail.

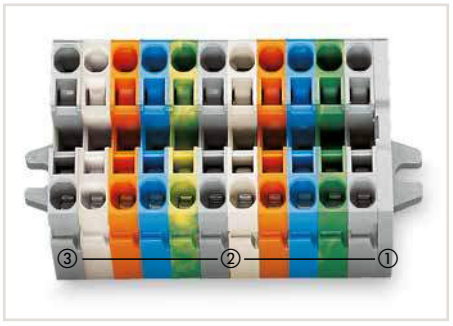

Terminal strip with mounting flanges:
- End plate with mounting flange ①
- Center terminal blocks ②
- End terminal block with mounting flange ③

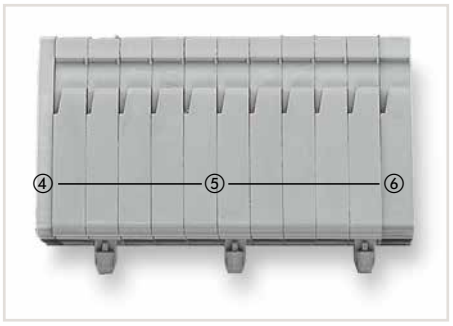

Terminal strip with snap-in mounting feet:
- End plate ④
- Center terminal blocks with/without snap-in mounting feet ⑤
- End terminal block with/without snap-in mounting foot ⑥



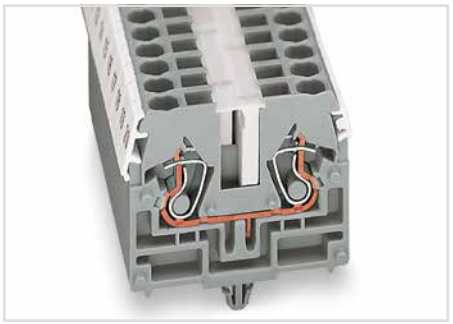

WMB markers in Mini-WSB marker slots
Marking strip, translucent
Mini-WSB markers



Push jumper bars down firmly until fully inserted. When using multipole bars, push alternately on the right and then left side until installed.
Push-in type jumper bars 1 – 3 – 5 – 7 or 1 – 4 – 7 are available upon request.

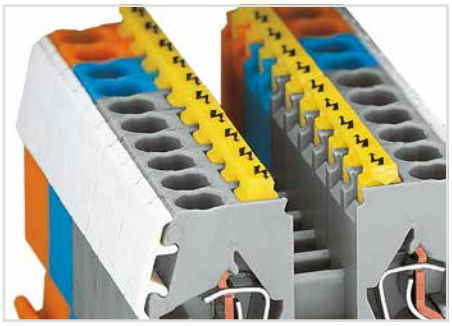

Protective warning markers (280-405), with a black high-voltage symbol

CAGE CLAMP®
terminates the following copper conductors:

solid	stranded	fine-stranded, also with tinned single strands	fine-stranded, tip-bonded	fine-stranded, with ferrule (gastight crimped)	fine-stranded, with pin terminal (gastight crimped)

For aluminum conductors, see notes in Section 14. When using ferrules, the max. conductor cross section accommodated is one size smaller than max. rating of terminal block.

Compact Terminal Strips with Mounting Flanges or Snap-in Mounting Feet

2.5 (4 “f-st”) mm², 870 Series

0.08 … 2.5 (4 “f-st”) mm² | 28 … 12 AWG 500 V/6 kV/3 | 300 V, 20 A I_N 24 A Pole width 5 mm / 0.197 inch 6 … 7 mm / 0.24 … 0.28 inch	0.08 … 2.5 (4 “f-st”) mm² | 28 … 12 AWG 500 V/6 kV/3 | 300 V, 20 A I_N 24 A Pole width 5 mm / 0.197 inch 6 … 7 mm / 0.24 … 0.28 inch	0.08 … 2.5 (4 “f-st”) mm² | 28 … 12 AWG 500 V/6 kV/3 | 300 V, 20 A I_N 24 A Pole width 5 mm / 0.197 inch 6 … 7 mm / 0.24 … 0.28 inch



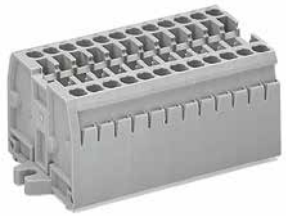



Pole No.	Item No.	Pack. Unit
Compact terminal strip, with M3 mounting flanges, for screw or similar mounting types, 3.2 mm mounting hole diameter, gray		
2	869-102	100
3	869-103	100
4	869-104	100
5	869-105	100
6	869-106	50
7	869-107	50
8	869-108	50
9	869-109	50
10	869-110	50
11	869-111	25
12 ❶	869-112	25
light gray		
2	869-132	100
3	869-133	100
4	869-134	100
5	869-135	100
6	869-136	50
7	869-137	50
8	869-138	50
9	869-139	50
10	869-140	25
11	869-141	25
12 ❶	869-142	25

Pole No.	Item No.	Pack. Unit
Compact terminal strip, with M4 mounting flanges, for screw or similar mounting types, 4.2 mm mounting hole diameter, gray		
2	869-202	100
3	869-203	100
4	869-204	100
5	869-205	100
6	869-206	50
7	869-207	50
8	869-208	50
9	869-209	50
10	869-210	25
11	869-211	25
12 ❶	869-212	25
light gray		
2	869-232	100
3	869-233	100
4	869-234	100
5	869-235	100
6	869-236	50
7	869-237	50
8	869-238	50
9	869-239	50
10	869-240	25
11	869-241	25
12 ❶	869-242	25

Pole No.	Item No.	Pack. Unit
Compact terminal strip, with snap-in mounting feet, for 0.6 … 1.2 mm plate thickness, 3.5 + 0.1 mm mounting hole diameter, gray		
2	869-152	100
3	869-153	100
4	869-154	100
5	869-155	100
6	869-156	50
7	869-157	50
8	869-158	50
9	869-159	50
10	869-160	25
11	869-161	25
12 ❶	869-162	25
light gray		
2	869-182	100
3	869-183	100
4	869-184	100
5	869-185	100
6	869-186	50
7	869-187	50
8	869-188	50
9	869-189	50
10	869-190	25
11	869-191	25
12 ❶	869-192	25

Dimensions in mm

Modular terminal blocks and terminal strips with mounting flanges
L = (pole no. x pole width) + 2.5 mm L_1 = L + 5.6 mm, with flange M4 6.6 mm

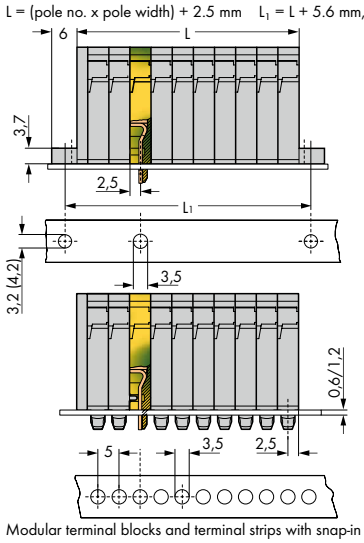

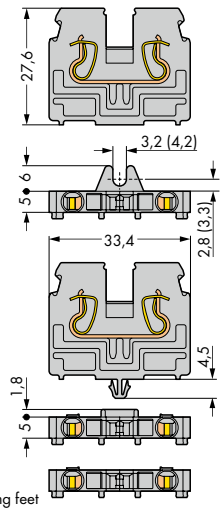

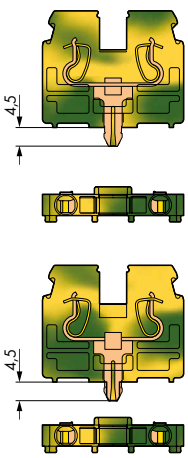

Modular terminal blocks and terminal strips with snap-in mounting feet
L = (pole no. x pole width) + 2.5 mm

❶ Longer strips and/or mixed-color assemblies are available upon request.

Item no. suffixes for gray terminal strips in:

blue	.../000-006 2
green-yellow	.../000-016
869-102 … 869-112	
869-202 … 869-212	
869-152 … 869-162	

❷ Terminal strips with a blue insulated housing are suitable for Ex i applications.

8

Modular Terminal Blocks with Mounting Flanges or Snap-in Mounting Feet

2.5 (4 "f-st") mm², 870 Series

0.08 ... 2.5 (4"f-st")mm² ❶ | 28 ... 12 AWG 500 V/6 kV/3 ❷ | 300 V, 20 A I_N 24 A Terminal block width 5 mm / 0.197 inch 6 ... 7 mm / 0.24 ... 0.28 inch	0.08 ... 2.5 (4"f-st")mm² ❶ | 28 ... 12 AWG 500 V/6 kV/3 ❷ | 300 V, 20 A I_N 24 A Terminal block width 5 mm / 0.197 inch 6 ... 7 mm / 0.24 ... 0.28 inch	0.08 ... 2.5 (4"f-st")mm² ❶ | 28 ... 12 AWG 500 V/6 kV/3 ❷ | 300 V, 20 A I_N 24 A Terminal block width 5 mm / 0.197 inch 6 ... 7 mm / 0.24 ... 0.28 inch

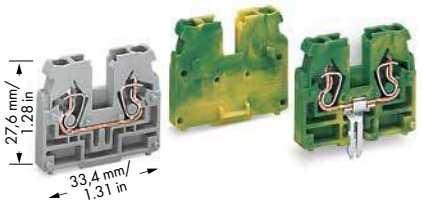





Color	Item No.	Pack. Unit
Center terminal block, without snap-in mounting foot, for 0.6 ... 1.2 mm plate thickness, required between end plate and end terminal block for terminal strips with mounting flanges		
gray	**869-321**	100
blue	**869-324** ❸	100
orange	**869-326**	100
green-yellow	**869-327**	100
light gray	**869-329**	100
Center terminal block, with direct ground contact, 3.5 + 0.1 mm drilled hole diameter, required between end plate and end terminal block for terminal strips with mounting flanges Notice: Terminal block cannot be commoned!		
green-yellow	**869-328**	100

Color	Item No.	Pack. Unit
End terminal block, with M3 mounting flange, for screw or similar mounting types, 3.2 mm mounting hole diameter		
gray	**869-301**	100
blue	**869-304** ❸	100
green-yellow	**869-307**	100
light gray	**869-309**	100
End terminal block, with M4 mounting flange, for screw or similar mounting types, 4.2 mm mounting hole diameter		
gray	**869-351**	100
blue	**869-354** ❸	100
green-yellow	**869-357**	100
light gray	**869-359**	100

Color	Item No.	Pack. Unit
End terminal block, with snap-in mounting foot, for 0.6 ... 1.2 mm plate thickness, 3.5 + 0.1 mm mounting hole diameter		
gray	**869-331**	100
blue	**869-334** ❸	100
green-yellow	**869-337**	100
light gray	**869-339**	100
End terminal block, without snap-in mounting foot, for 0.6 ... 1.2 mm plate thickness		
gray	**869-341**	100
blue	**869-344** ❸	100
green-yellow	**869-347**	100
light gray	**869-349**	100

Item-Specific Accessories

Aluminum carrier rail, 1000 mm long, 18 mm wide, 7 mm high



210-154 1

Plastic end stop, with WSB marker slot, for aluminum carrier rail (210-154), 6 mm wide



209-122 25

869 Series Accessories

Appropriate marking systems: WMB/WMB Inline/Mini-WSB/Mini-WSB Inline (see Section 13)

End plate, with M3 mounting flange, 2.5 mm thick



gray	**869-385**	100 (4x25)
blue	**869-388**	100 (4x25)
green-yellow	**869-389**	100 (4x25)
light gray	**869-387**	100 (4x25)

End plate, with M4 mounting flange, 2.5 mm thick



gray	**869-395**	100 (4x25)
blue	**869-398**	100 (4x25)
green-yellow	**869-399**	100 (4x25)
light gray	**869-397**	100 (4x25)

End plate, for terminal blocks with snap-in mounting foot, 2.5 mm thick



gray	**869-375**	100 (4x25)
blue	**869-378**	100 (4x25)
green-yellow	**869-379**	100 (4x25)
light gray	**869-377**	100 (4x25)

Insulation stop, 5 pcs/strip, 0.08 ... 0.2 mm² "s" (0.14 mm² "f-st") ❹



white	**280-470**	200 (8x25)

Insulation stop, 5 pcs/strip, 0.25 ... 0.5 mm² ❹



light gray	**280-471**	200 (8x25)

Insulation stop, 5 pcs/strip, 0.75 ... 1 mm² ❹



dark gray	**280-472**	200 (8x25)

Push-in type jumper bar, insulated, I_N 18 A, light gray



2-way	**870-402**	200 (8x25)
3-way	**870-403**	200 (8x25)
4-way	**870-404**	100 (4x25)
5-way	**870-405**	100 (4x25)
6-way	**870-406**	100 (4x25)
7-way	**870-407**	100 (4x25)
8-way	**870-408**	100 (4x25)
9-way	**870-409**	100 (4x25)
10-way	**870-410**	50 (2x25)

Push-in type jumper bar, insulated, I_N 18 A, light gray



from 1 to 3	**870-433**	200 (8x25)
from 1 to 4	**870-434**	200 (8x25)
from 1 to 5	**870-435**	100 (4x25)
from 1 to 6	**870-436**	100 (4x25)
from 1 to 7	**870-437**	100 (4x25)
from 1 to 8	**870-438**	100 (4x25)
from 1 to 9	**870-439**	100 (4x25)
from 1 to 10	**870-440**	50 (2x25)

Overview of certification organizations, see page 654

0.08 ... 2.5 (4"f-st")mm² ❶	28 ... 12 AWG
500 V/6 kV/3 ❷	300 V, 20 A
I_N 24 A	

Terminal block width 5 mm / 0.197 inch
6 ... 7 mm / 0.24 ... 0.28 inch



Terminal strips with M3 or M4 mounting flanges, for screw or similar mounting types,
mounting holes:
3.2 mm Ø, M3 flange
4.2 mm Ø, M4 flange



❶ Max. insulation diameter: 4.4 mm
❷ 500 V = rated voltage
6 kV = rated surge voltage
3 = pollution degree
(see Section 14)
❸ Suitable for Ex i applications
❹ See application notes for:
Insulation stop, page 331
Group marker carrier, page 377

Color	Item No.	Pack. Unit
Center terminal block, with snap-in mounting foot, for 0.6 ... 1.2 mm plate thickness, 3.5 + 0.1 mm mounting hole diameter		
gray	**869-311**	100
blue	**869-314** ❸	100
orange	**869-316**	100
green-yellow	**869-317**	100
light gray	**869-319**	100



Terminal strips with snap-in mounting feet,
for 0.6 ... 1.2 mm plate thickness,
mounting holes: $3.5^{+0.1}$ mm Ø

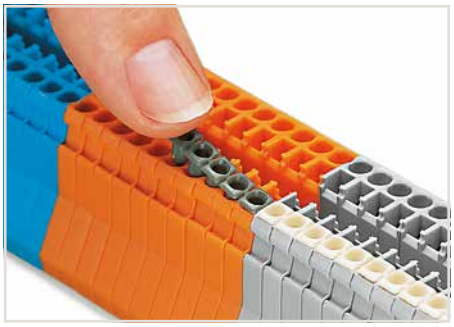

Inserting an insulation stop into conductor entry holes of terminal strip.

8

Item-Specific Accessories

Aluminum carrier rail, 1000 mm long, 18 mm wide, 7 mm high			
		210-154	1
Plastic end stop, with WSB marker slot, for aluminum carrier rail (210-154), 6 mm wide			
		209-122	25
Marking strip, plain, 7.5 mm wide, 1 m long			
	translucent	**709-196**	1
Protective warning marker, with black high-voltage symbol, for 5 terminal blocks			
	yellow	**280-405**	100 (4x25)
Group marker carrier, fits into terminal block jumper slot ❹			
	gray	**870-184**	50 (2x25)
Test plug, with 500 mm cable, 2 mm Ø, max. 42 V			
	red	**210-136**	50

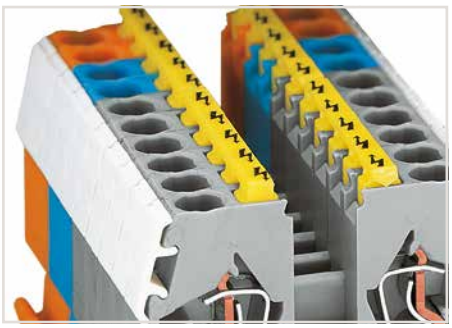

Protective warning markers (280-405), with a black high-voltage symbol

Wiring programmable logic controllers and microprocessor-operated control circuits often relies on very small cross sections of fine-stranded conductors. These small conductors are highly flexible, and they deform when pushed against the conductor stop in terminal blocks. As a result, the conductor insulation – not the copper conductor – may be clamped, causing intermittent contact or no contact at all. Common to all terminal block types currently offered, this problem creates unnecessary downtime for troubleshooting.

The solution: an insulation stop for compact terminal blocks. Insulation stops automatically bundle the cores of fine-stranded conductors when inserted into the clamping unit, preventing splaying. This also limits the conductor entry to a defined cross sectional area – ensuring the actual conductor, not the insulation, will enter the clamping unit.

The insulation stop is available as dividable 5-pole strip for the 869 Series terminal strips.

Insulation stop usage will not affect the conductor strip lengths for the aforementioned terminal strips.

Modular Terminal Blocks and Terminal Strips, 264 Series

Description and Installation

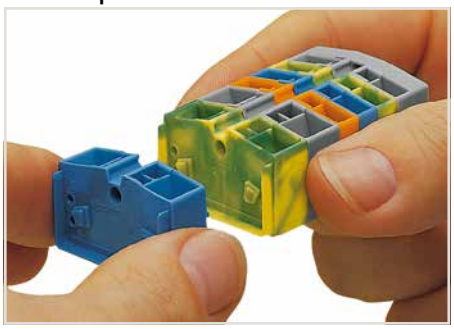

Assembling modular terminal blocks into terminal strips.

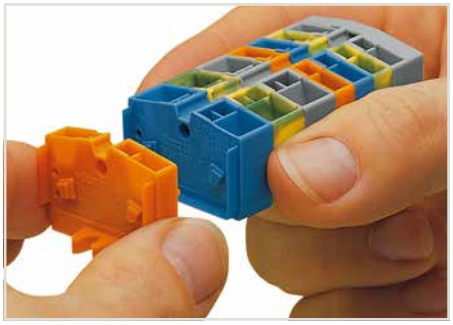

Mounting an "end terminal block" with mounting flange.

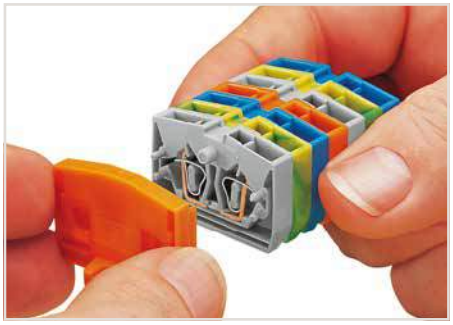

Mounting an end plate.



CAGE CLAMP® connection
Inserting a conductor via screwdriver.
With ferruled conductors, it is necessary to use a terminal block one size smaller than the conductor's nominal cross section.

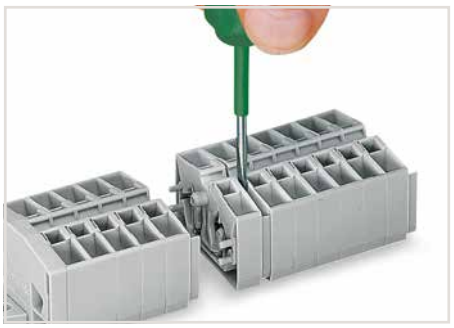

Removing a terminal block.

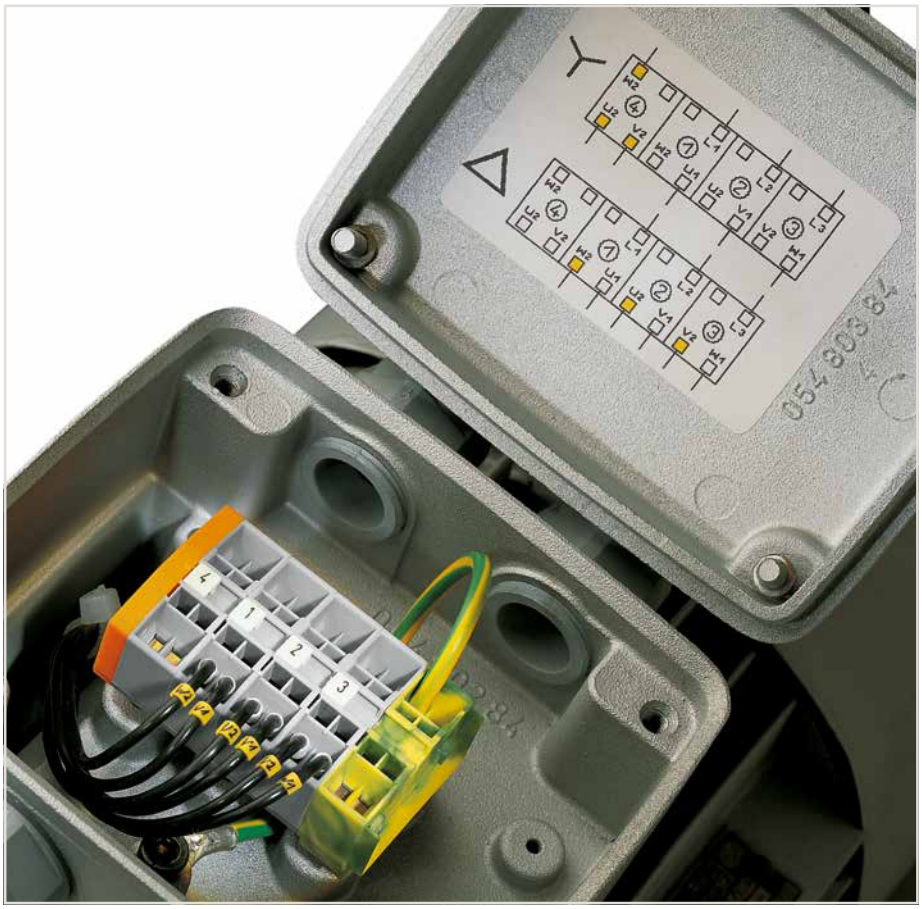

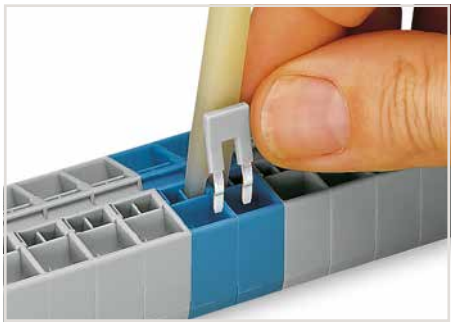

Commoning with comb-style jumper bar.



Marking with T-marker tag (209-290).



Combining 2- and 4-conductor terminal blocks.
Marking via Mini-WSB Quick markers.



CAGE CLAMP® terminates the following copper conductors:
solid



stranded



fine-stranded, also with tinned single strands

For aluminum conductors, see notes in Section 14.

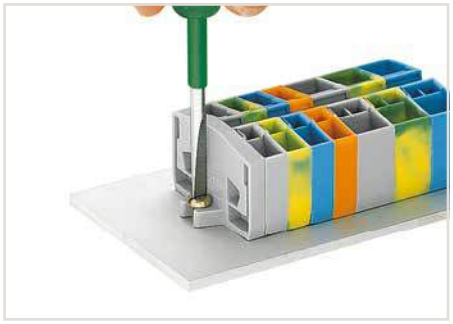

Mounting and securing a terminal strip directly to the plate via screw-type flanges.

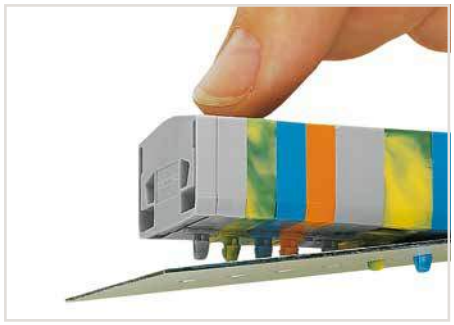

Mounting a terminal strip with snap-in feet into holes.

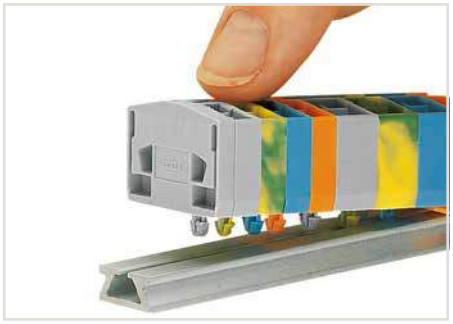

Mounting a terminal strip with snap-in feet onto aluminum rail.

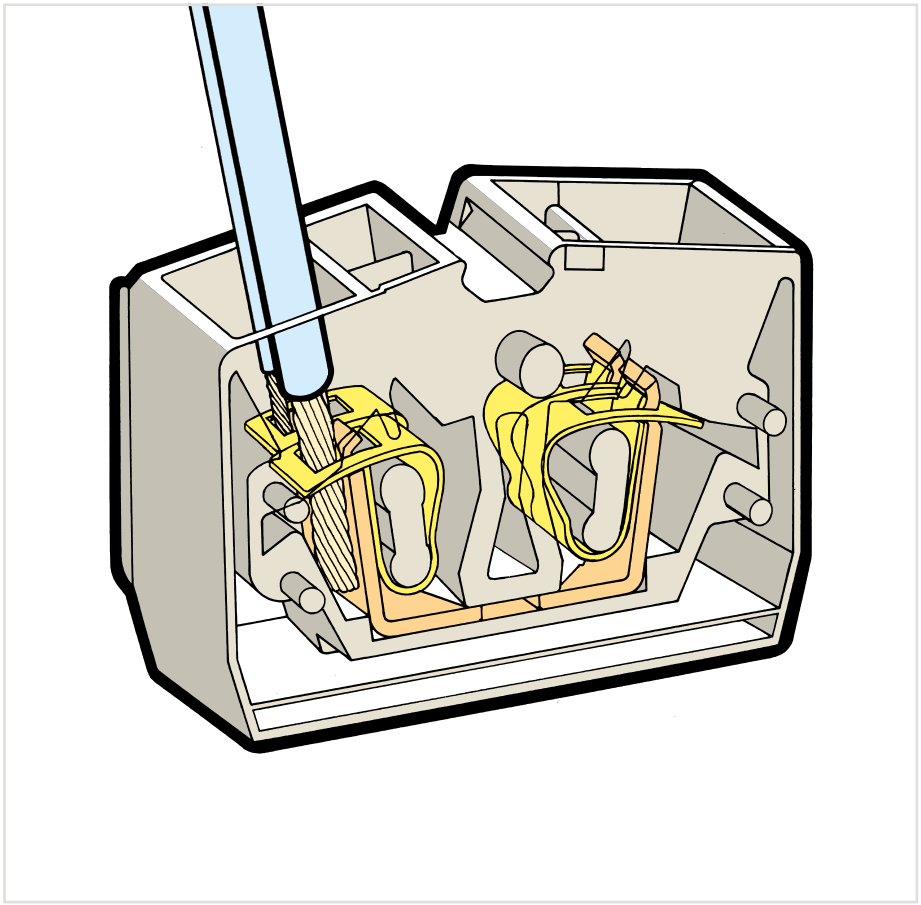

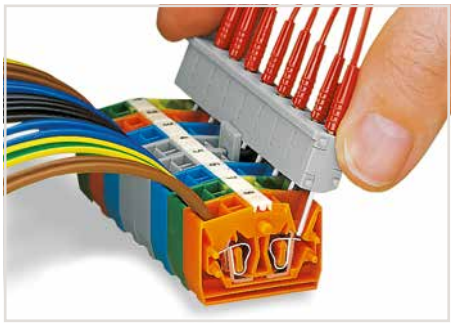

Testing by touch contact to the CAGE CLAMP® spring (limited to 0.5 A and 48 V test voltage) – test pins are not protected against accidental contact.



Testing via CAGE CLAMP® on the current bar (max. nominal current: 6 A).
CAGE CLAMP® clamps individual test contacts.
The maximum test voltage is 400 V.



Terminal strip with mounting flanges, for screw or similar mounting types, fixing hole 3.2 mm Ø.



Terminal strip with snap-in mounting feet, for plate thickness 0.6 mm ... 1.2 mm, fixing hole 3.5 mm Ø.



fine-stranded, tip-bonded



fine-stranded, with ferrule (gastight crimped)



fine-stranded, with pin terminal (gastight crimped)

Modular Terminal Blocks with Mounting Flange

2.5 mm², 264 Series

0.08 … 2.5 mm² / 800 V/8 kV/3 ❶ / I_N 24 A	28 … 12 AWG*	0.08 … 2.5 mm² / 800 V/8 kV/3 ❶ / I_N 24 A	28 … 12 AWG*
Terminal block width 6 mm / 0.236 inch 8 … 9 mm / 0.31 … 0.35 inch		Terminal block width 10 mm / 0.394 inch 8 … 9 mm / 0.31 … 0.35 inch	





* 12 AWG: THHN, THWN

❶ 800 V = rated voltage
8 kV = rated surge voltage
3 = pollution degree
(see Section 14)

❷ Suitable for Ex i applications

❸ Suitable for Ex e II applications
0.5 … 2.5 mm² / 20 … 12 AWG*
690 V, 23 A
(see Section 14)

❹ See application notes for:
Alternate comb-style jumper bar, page 332
Test plug module, page 456
Mini-WSB, page 580

Color	Item No.	Pack. Unit
2-conductor center terminal block, required between end plate and end terminal block for terminal strips with mounting flanges		
gray	**264-321**	100
blue	**264-324** ❷	100
orange	**264-326**	100
green-yellow	**264-327**	100
light gray	**264-131** ❸	100
2-conductor end terminal block, with mounting flange, for screw or similar mounting types, 3.2 mm mounting hole diameter		
gray	**264-301**	100
blue	**264-304** ❷	100
orange	**264-306**	100
green-yellow	**264-307**	100
light gray	**264-130** ❸	100

Color	Item No.	Pack. Unit
4-conductor center terminal block, required between end plate and end terminal block for terminal strips with mounting flanges		
gray	**264-351**	100
blue	**264-354** ❷	100
orange	**264-356**	100
green-yellow	**264-357**	100
light gray	**264-231** ❸	100
4-conductor end terminal block, with mounting flange, for screw or similar mounting types, 3.2 mm mounting hole diameter		
gray	**264-331**	100
blue	**264-334** ❷	100
orange	**264-336**	100
green-yellow	**264-337**	100
light gray	**264-230** ❸	100



Terminal strip with mounting flanges, consisting of:
- End plate with mounting flange
- Center terminal blocks
- End terminal block with mounting flange

Item-Specific Accessories

Alternate comb-style jumper bar, insulated, I_N = I_N terminal block ❹			
2-way	**281-492**	100 (4x25)	
Test plug module, without locking latches, snaps together, 6 mm wide ❹			
gray	**249-136**	100 (4x25)	
Mini-WSB Quick marking system, white, 10 strips with 10 markers per card, 5 mm wide markers ❹			
plain	**248-501**	5	

Item-Specific Accessories

Alternate comb-style jumper bar, insulated, I_N = I_N terminal block ❹			
2-way	**280-492**	200 (8x25)	
Test plug module, without locking latches, snaps together, 10 mm wide ❹			
gray	**249-139**	100 (4x25)	
Mini-WSB Quick marking system, white, 10 strips with 10 markers per card, 5 mm wide markers ❹			
	264-900	5	

264 Series Accessories

Appropriate marking systems: Mini-WSB/Mini-WSB Inline/T-marker tag (see Section 13)

End plate, with mounting flange, 4 mm thick			
gray	**264-361**	25	
orange	**264-364**	25	
light gray	**264-363**	25	
Comb-style jumper bar, insulated, I_N 16 A, gray, reduces maximum conductor size to 1.5 mm² / 16 AWG			
2-way	**264-402**	200 (8x25)	
Operating tool, of insulating material			
2-way	**280-432**	1	

Test plug, with 500 mm cable, 2 mm Ø, max. 42 V			
red	**210-136**	50	
Test plug, with 500 mm cable, 2.3 mm Ø, max. 42 V			
yellow	**210-137**	50	
T marker tag, 30 markers each tag, up to 6 characters per marker, 5 … 6 mm stretchable			
plain	**209-290**	50	

Modular Terminal Blocks with Snap-in Mounting Foot

2.5 mm², 264 Series

0.08 ... 2.5 mm² / 28 ... 12 AWG*	0.08 ... 2.5 mm² / 28 ... 12 AWG*
800 V/8 kV/3 ❶	800 V/8 kV/3 ❶
I_N 24 A	I_N 24 A
Terminal block width 6 mm / 0.236 inch	Terminal block width 10 mm / 0.394 inch
8 ... 9 mm / 0.31 ... 0.35 inch	8 ... 9 mm / 0.31 ... 0.35 inch

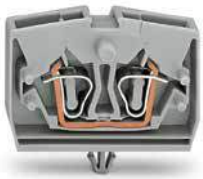



* 12 AWG: THHN, THWN

❶ 800 V = rated voltage
8 kV = rated surge voltage
3 = pollution degree
(see Section 14)

❷ Suitable for Ex i applications

❸ Suitable for Ex e II applications
0.5 ... 2.5 mm² / 20 ... 12 AWG*
690 V, 23 A
(see Section 14)

❹ See application notes for:
Alternate comb-style jumper bar, page 332
Test plug module, page 456
Mini-WSB, page 580

Color	Item No.	Pack. Unit
2-conductor terminal block, with snap-in mounting foot, for 0.6 ... 1.2 mm plate thickness, 3.5 mm mounting hole diameter		
gray	**264-311**	100
blue	**264-314** ❷	100
orange	**264-316**	100
green-yellow	**264-317**	100
light gray	**264-180** ❸	100

Color	Item No.	Pack. Unit
4-conductor terminal block, with snap-in mounting foot, for 0.6 ... 1.2 mm plate thickness, 3.5 mm mounting hole diameter		
gray	**264-341**	100
blue	**264-344** ❷	100
orange	**264-346**	100
green-yellow	**264-347**	100
light gray	**264-280** ❸	100

Item-Specific Accessories

❹	Alternate comb-style jumper bar, insulated, I_N = I_N terminal block		
	2-way	**281-492**	100 (4x25)
❹	Test plug module, without locking latches, snaps together, 6 mm wide		
	gray	**249-136**	100 (4x25)
❹	Mini-WSB Quick marking system, white, 10 strips with 10 markers per card, 5 mm wide markers		
	plain	**248-501**	5

Item-Specific Accessories

❹	Alternate comb-style jumper bar, insulated, I_N = I_N terminal block		
	2-way	**280-492**	200 (8x25)
❹	Test plug module, without locking latches, snaps together, 10 mm wide		
	gray	**249-139**	100 (4x25)
❹	Mini-WSB Quick marking system, white, 10 strips with 10 markers per card, 5 mm wide markers		
		264-900	5

264 Series Accessories

Appropriate marking systems: Mini-WSB/Mini-WSB Inline/T-marker tag (see Section 13)

End plate, for terminal blocks with snap-in mounting foot			
	gray	**264-371**	25
	orange	**264-374**	25
	light gray	**264-373**	25
Comb-style jumper bar, insulated, I_N 16 A, gray, reduces maximum conductor size to 1.5 mm² / 16 AWG			
	2-way	**264-402**	200 (8x25)
Operating tool, of insulating material			
	2-way	**280-432**	1
Test plug, with 500 mm cable, 2 mm Ø, max. 42 V			
	red	**210-136**	50
Test plug, with 500 mm cable, 2.3 mm Ø, max. 42 V			
	yellow	**210-137**	50
Aluminum carrier rail, 1000 mm long, 18 mm wide, 7 mm high			
		210-154	1

Plastic end stop, with WSB marker slot, for aluminum carrier rail (210-154), 6 mm wide			
		209-122	25
T marker tag, 30 markers each tag, up to 6 characters per marker, 5 ... 6 mm stretchable			
	plain	**209-290**	50
Operating tool with a partially insulated shaft, type 2, (3.5 x 0.5) mm blade			
		210-720	1



Terminal strip with snap-in mounting feet, consisting of:
- End plate
- 4-conductor term. block with snap-in mounting foot[1)]
- Center terminal blocks
- 2-conductor term. block with snap-in mounting foot[1)]

[1)] at every 4th or 5th terminal block on the strip

8

Terminal Strips with Mounting Flanges or Snap-in Mounting Feet

2.5 mm², 264 Series

0.08 ... 2.5 mm²	28 ... 12 AWG*	0.08 ... 2.5 mm²	28 ... 12 AWG*	0.5 ... 2.5 mm²	20 ... 12 AWG*
800 V/8 kV/3 ❶	300 V, 20 A	800 V/8 kV/3 ❶	300 V, 20 A	690 V ❷	300 V, 20 A
I_N 24 A	600 V, 20 A	I_N 24 A	600 V, 20 A	I_N 23 A	600 V, 20 A
Pole width 6 mm / 0.236 inch		Pole width 10 mm / 0.394 inch		Pole width 6 mm / 0.236 inch	
8 ... 9 mm / 0.31 ... 0.35 inch		8 ... 9 mm / 0.31 ... 0.35 inch		8 ... 9 mm / 0.31 ... 0.35 inch	







Pole No.	Item No.	Pack. Unit
2-conductor terminal strip, with mounting flanges, for screw or similar mounting types, 3.2 mm mounting hole diameter, gray		
2	264-102	100
3	264-103	100
4	264-104	100
5	264-105	100
6	264-106	100
7	264-107	100
8	264-108	100
9	264-109	50
10	264-110	50
11	264-111	50
12 ❸	264-112	25
2-conductor terminal strip, with snap-in mounting feet, for 0.6 ... 1.2 mm plate thickness, 3.5 mm mounting hole diameter, gray		
2	264-152	100
3	264-153	100
4	264-154	100
5	264-155	100
6	264-156	50
7	264-157	50
8	264-158	50
9	264-159	50
10	264-160	25
11	264-161	25
12 ❸	264-162	25

Pole No.	Item No.	Pack. Unit
4-conductor terminal strip, with mounting flanges, for screw or similar mounting types, 3.2 mm mounting hole diameter, gray		
2	264-202	100
3	264-203	100
4	264-204	100
5	264-205	100
6	264-206	100
7	264-207	100
8	264-208	100
9	264-209	50
10	264-210	50
11	264-211	25
12 ❸	264-212	25
4-conductor terminal strip, with snap-in mounting feet, for 0.6 ... 1.2 mm plate thickness, 3.5 mm mounting hole diameter, gray		
2	264-252	100
3	264-253	100
4	264-254	100
5	264-255	100
6	264-256	50
7	264-257	50
8	264-258	50
9	264-259	50
10	264-260	25
11	264-261	25
12 ❸	264-262	25

Pole No.	Item No.	Pack. Unit
2-conductor Ex e II terminal strip, with mounting flanges, for screw or similar mounting types, 3.2 mm mounting hole diameter, light gray		
2	264-132	100
3	264-133	100
4	264-134	100
5	264-135	100
6	264-136	100
7	264-137	100
8	264-138	100
9	264-139	50
10	264-140	50
11	264-141	25
12 ❸	264-142	25
2-conductor Ex e II terminal strip, with snap-in mounting feet, for 0.6 ... 1.2 mm plate thickness, 3.5 mm mounting hole diameter, light gray		
2	264-182	100
3	264-183	100
4	264-184	100
5	264-185	100
6	264-186	50
7	264-187	50
8	264-188	50
9	264-189	50
10	264-190	25
11	264-191	25
12 ❸	264-192	25

Modular terminal blocks and terminal strips with mounting flanges

L = pole no. x pole width L_1 = L + 9.6 mm L_2 = L + 16 mm

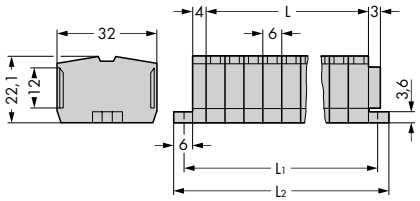

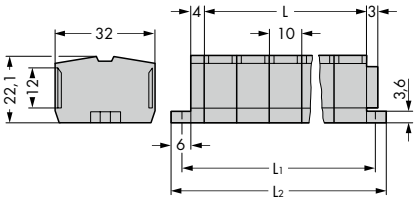

Modular terminal blocks and terminal strips with snap-in mounting feet

L = (pole no. x pole width) + 7 mm

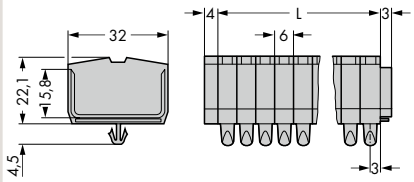

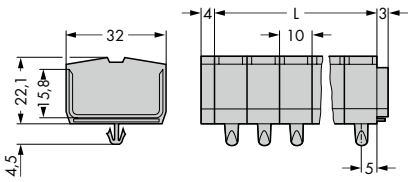

Dimensions in mm



Terminal strip with mounting flanges, for screw or similar mounting types, fixing hole 3.2 mm Ø.

Overview of certification organizations, see page 654

0.5 ... 2.5 mm²	20 ... 12 AWG*
690 V ❷	300 V, 20 A
I_N 23 A	600 V, 20 A

Pole width 10 mm / 0.394 inch
8 ... 9 mm / 0.31 ... 0.35 inch

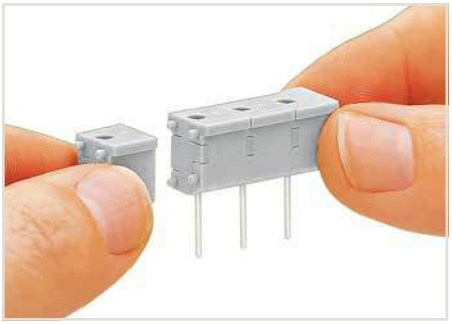

Snapping individual modules together to assemble a multi-pole test plug module.



* 12 AWG: THHN, THWN

❶ 800 V = rated voltage
8 kV = rated surge voltage
3 = pollution degree
(see Section 14)

❷ Suitable for Ex e II applications
(see Section 14)

❸ Longer strips and/or mixed-color assemblies are available upon request.

Pole No.	Item No.	Pack. Unit
4-conductor Ex e II terminal strip, with mounting flanges, for screw or similar mounting types, 3.2 mm mounting hole diameter, light gray		
2	**264-232**	100
3	**264-233**	100
4	**264-234**	100
5	**264-235**	100
6	**264-236**	100
7	**264-237**	100
8	**264-238**	100
9	**264-239**	50
10	**264-240**	50
11	**264-241**	100
12 ❸	**264-242**	25
4-conductor Ex e II terminal strip, with snap-in mounting feet, for 0.6 ... 1.2 mm plate thickness, 3.5 mm mounting hole diameter, light gray		
2	**264-282**	100
3	**264-283**	100
4	**264-284**	100
5	**264-285**	100
6	**264-286**	100
7	**264-287**	50
8	**264-288**	50
9	**264-289**	50
10	**264-290**	25
11	**264-291**	25
12 ❸	**264-292**	25



Item no. suffixes for gray terminal strips with mounting flanges:
264-102 to 264-112
264-202 to 264-212

blue .../000-006
Terminal strips with a blue insulated housing are suitable for Ex i applications.



Item no. suffixes for gray terminal strips with snap-in mounting feet:
264-152 to 264-162
264-252 to 264-262

blue .../000-006
Terminal strips with a blue insulated housing are suitable for Ex i applications.

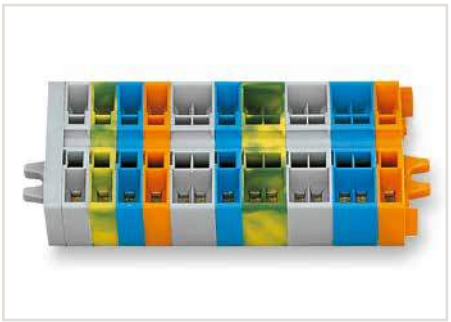

Terminal strip with mounting flanges, consisting of:
- End plate with mounting flange
- Center terminal blocks
- End terminal block with mounting flange



Terminal strip with snap-in mounting feet, consisting of:
- End plate
- 4-conductor term. block with snap-in mounting foot[1)]
- Center terminal blocks
- 2-conductor term. block with snap-in mounting foot[1)]

[1)] at every 4th or 5th terminal block on the strip



Terminal strip with snap-in mounting feet, for plate thickness 0.6 mm ... 1.2 mm, fixing hole 3.5 mm Ø.

8

Modular Terminal Blocks and Terminal Strips, 260 to 262 Series

Description and Installation

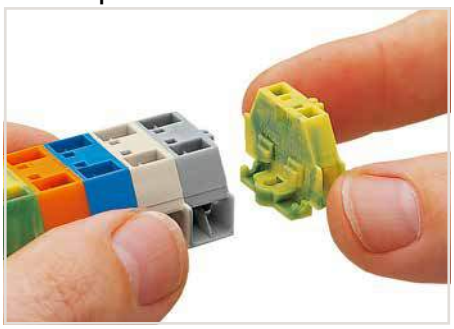

Assembling modular terminal blocks into terminal strips.

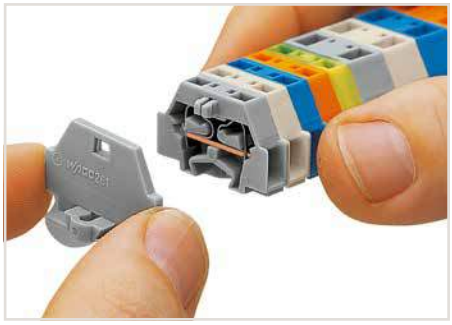

Mounting an end plate.

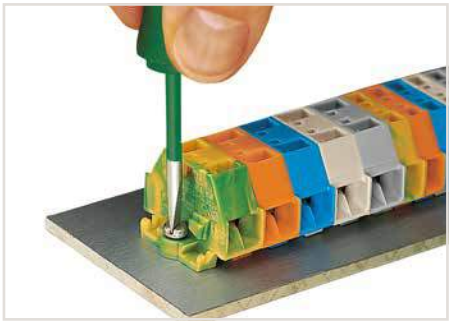

Mounting and securing a terminal strip directly to the plate via screw-type flanges.

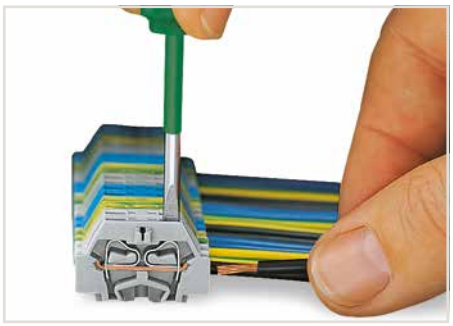

CAGE CLAMP® connection
Inserting a conductor via screwdriver.
With ferruled conductors, it is necessary to use a terminal block one size larger than the conductor's nominal cross-section.

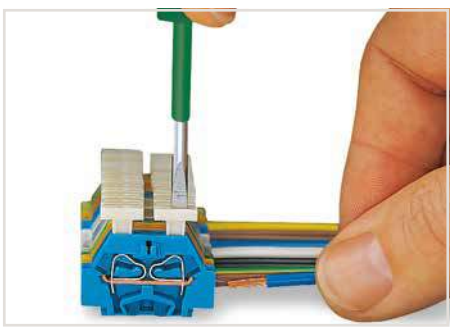

CAGE CLAMP® connection
Inserting a conductor via push-button.

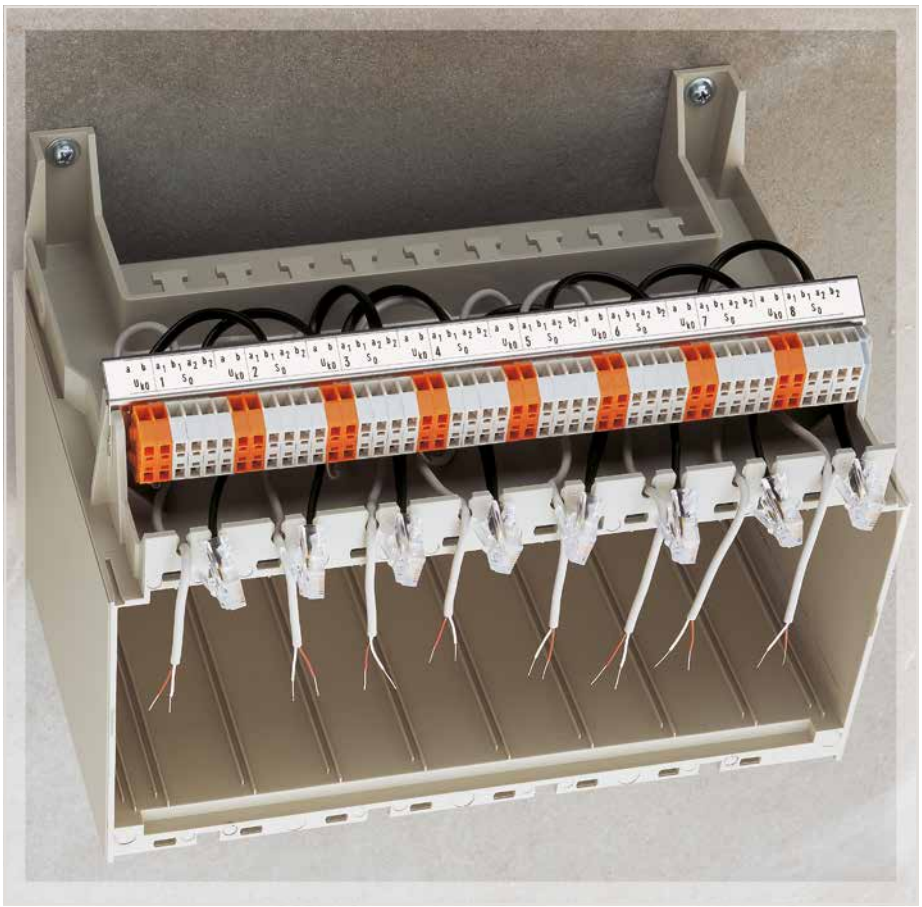

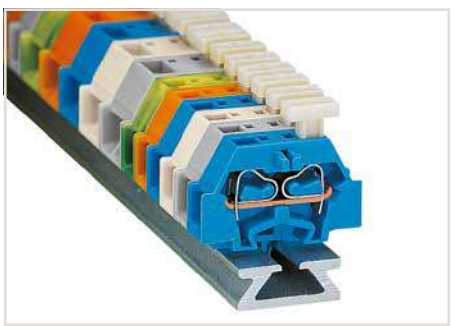

Terminal strip with push-buttons on one side

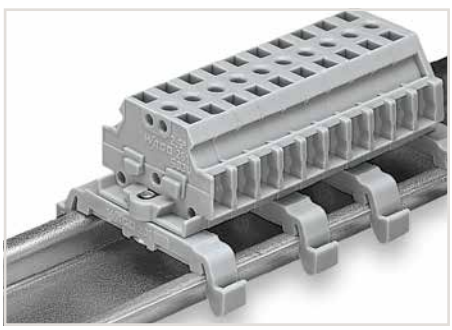

Terminal strip with marker slot for Mini-WSB Quick Marking System

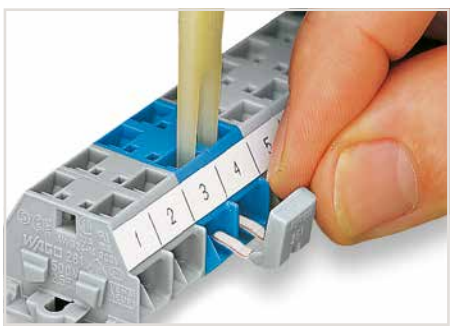

Commoning with comb-style jumper bar.



CAGE CLAMP® terminates the following copper conductors:
solid



stranded



fine-stranded, also with tinned single strands

For aluminum conductors, see notes in Section 14.



Mounting a terminal strip with snap-in feet into holes.



Mounting a terminal strip with snap-in feet onto aluminum rail.

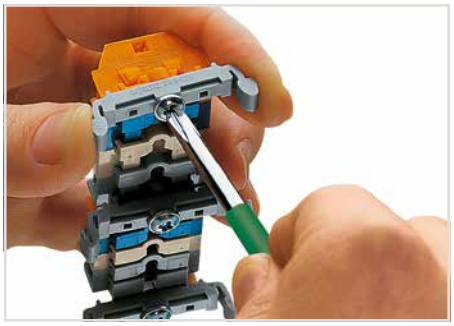

Terminal strip with mounting flanges – screwing a 209-123 Mounting Foot
(distance between mounting feet: approx. 20 ... 25 mm)

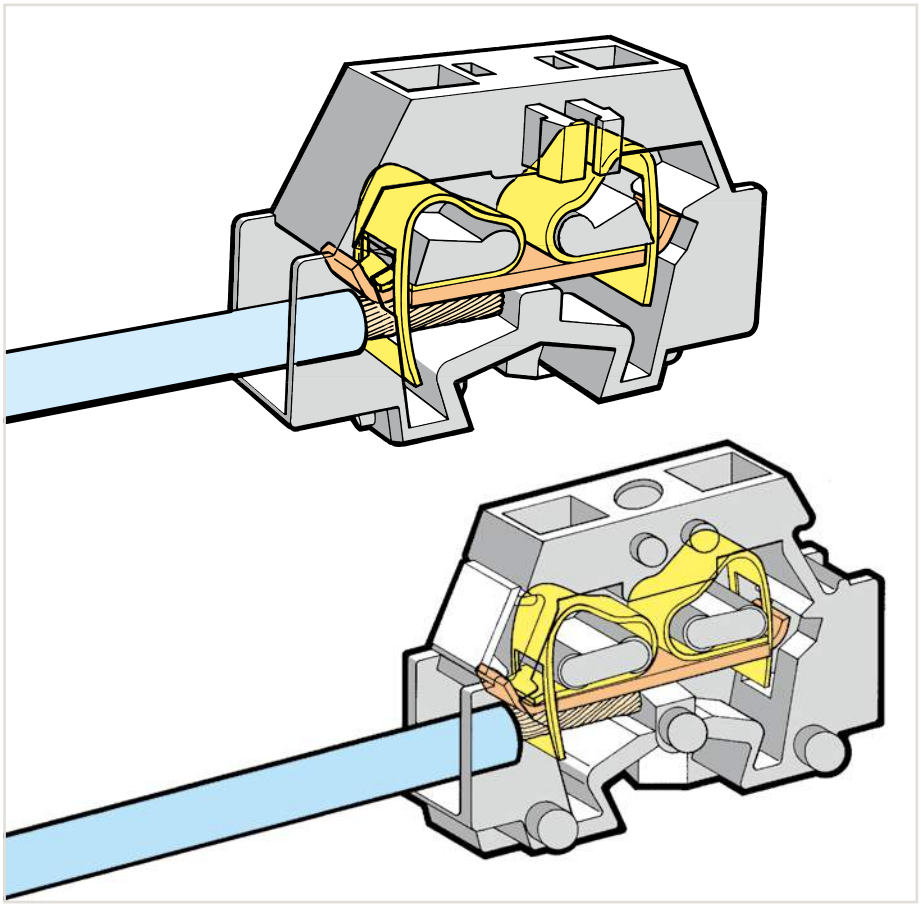

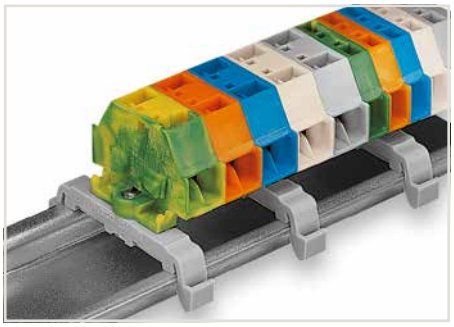

Terminal strip with mounting flanges on DIN-35 rail

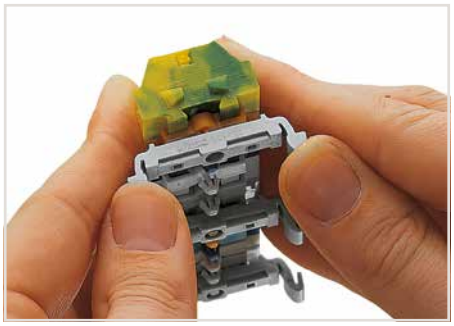

Terminal strip with snap-in mounting feet – snapping a 209-123 Mounting Foot
(distance between mounting feet: approx. 20 ... 25 mm)



Marking with self-adhesive marking strips.



Marking by direct printing (upon request).

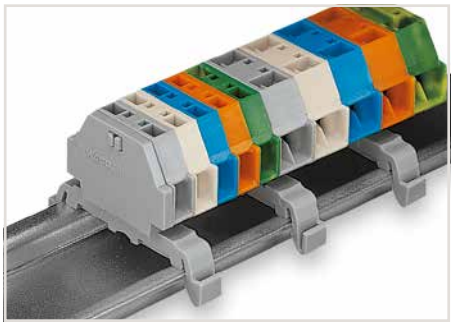

Terminal strip with snap-in mounting feet on DIN-35 rail



fine-stranded,
tip-bonded



fine-stranded,
with ferrule
(gastight crimped)



fine-stranded,
with pin terminal
(gastight crimped)

Modular Terminal Blocks with Mounting Flange or Snap-In Mounting Foot

1.5 mm², 260 Series

0.08 … 1.5 mm²	28 … 16 AWG
400 V/6 kV/3 ❶	300 V, 10 A
I_N 18 A	300 V, 15 A
Terminal block width 5 mm / 0.197 inch	
8 … 9 mm / 0.31 … 0.35 inch	

0.08 … 1.5 mm²	28 … 16 AWG
400 V/6 kV/3 ❶	300 V, 10 A
I_N 18 A	300 V, 15 A
Terminal block width 8 mm / 0.315 inch	
8 … 9 mm / 0.31 … 0.35 inch	





❶ 400 V = rated voltage
6 kV = rated surge voltage
3 = pollution degree
(see Section 14)

❷ See application notes for:
Test plug module, page 456

Color	Item No.	Pack. Unit
2-conductor terminal block, with mounting flange, for screw or similar mounting types, 3.2 mm mounting hole diameter, with mounting foot (209-123) also for DIN-35 rail		
gray	**260-301**	300 (6x50)
light gray	**260-303**	300 (6x50)
blue	**260-304**	300 (6x50)
orange	**260-306**	300 (6x50)
green-yellow	**260-307**	300 (6x50)
2-conductor terminal block, with snap-in mounting foot, for 0.6 … 1.2 mm plate thickness, 3.5 mm mounting hole diameter, also for aluminum rail (210-154) or with mounting foot (209-120) for DIN-35 rail		
gray	**260-311**	300 (6x50)
light gray	**260-313**	300 (6x50)
blue	**260-314**	300 (6x50)
orange	**260-316**	300 (6x50)
green-yellow	**260-317**	300 (6x50)
Space-saving, 2-conductor end terminal block, without protruding snap-in mounting foot, for terminal strips with snap-in mounting feet		
gray	**260-321**	300 (6x50)
light gray	**260-323**	300 (6x50)
blue	**260-324**	300 (6x50)
orange	**260-326**	300 (6x50)
green-yellow	**260-327**	300 (6x50)

Item-Specific Accessories

Test plug module, without locking latches, snaps together, 5 mm wide ❷
gray **249-135** 100 (4x25)

Test plug module, with locking latches, snaps together, 5 mm wide ❷
gray **260-404** 100 (4x25)

260 Series Accessories

For marking accessories, see Section 13

End plate, with mounting flange
gray **260-361** 300 (6x50)

End plate, with snap-in mounting foot
gray **260-371** 300 (6x50)

Color	Item No.	Pack. Unit
4-conductor terminal block, with mounting flange, for screw or similar mounting types, 3.2 mm mounting hole diameter, with mounting foot (209-123) also for DIN-35 rail		
gray	**260-331**	300 (6x50)
light gray	**260-333**	300 (6x50)
blue	**260-334**	300 (6x50)
orange	**260-336**	300 (6x50)
green-yellow	**260-337**	300 (6x50)
4-conductor terminal block, with snap-in mounting foot, for 0.6 … 1.2 mm plate thickness, 3.5 mm mounting hole diameter, also for aluminum rail (210-154) or with mounting foot (209-120) for DIN-35 rail		
gray	**260-341**	300 (6x50)
light gray	**260-343**	300 (6x50)
blue	**260-344**	300 (6x50)
orange	**260-346**	300 (6x50)
green-yellow	**260-347**	300 (6x50)
Space-saving, 4-conductor end terminal block, without protruding snap-in mounting foot, for terminal strips with snap-in mounting feet		
gray	**260-351**	300 (6x50)
light gray	**260-353**	300 (6x50)
blue	**260-354**	300 (6x50)
orange	**260-356**	300 (6x50)
green-yellow	**260-357**	300 (6x50)

Item-Specific Accessories

Test plug module, without locking latches, snaps together, 8 mm wide ❷
gray **249-138** 100 (4x25)

Test plug module, with locking latches, snaps together, 8 mm wide ❷
gray **260-405** 100 (4x25)

Comb-style jumper bar, insulated, I_N 10 A, gray, reduces maximum conductor size to 1 mm²/16 AWG
2-way **260-402** 25

Operating tool, of insulating material, for inserting comb-style jumper bars
2-way **209-132** 1

260 Series Accessories

Marking accessories, see Section 13

Aluminum carrier rail, 1000 mm long, 18 mm wide, 7 mm high
210-154 1

Plastic end stop, with WSB marker slot, for aluminum carrier rail (210-154), 6 mm wide
209-122 25

Mounting foot, for DIN-35 rail, snaps onto terminal blocks with snap-in mounting foot, 6.4 mm wide
gray **209-120** 25

Mounting foot with screw, for DIN-35 rail, can be screwed on terminal blocks with mounting flange, 6.4 mm wide
gray **209-123** 25

Mounting adapter, for DIN-35 rail, can be used as end plate, 6.5 mm wide
gray **209-137** 25

Test plug, with 500 mm cable, 2 mm Ø, max. 42 V
red **210-136** 50

Test plug, with 500 mm cable, 2.3 mm Ø, max. 42 V
yellow **210-137** 50

Operating tool with a partially insulated shaft, type 2, (3.5 x 0.5) mm blade
210-720 1

Terminal Strips with Mounting Flanges or Snap-in Mounting Feet

1.5 mm², 260 Series

0.08 … 1.5 mm²	28 … 16 AWG
400 V/6 kV/3 ❶	300 V, 10 A
I_N 18 A	300 V, 15 A
Pole width 5 mm / 0.197 inch	
8 … 9 mm / 0.31 … 0.35 inch	

0.08 … 1.5 mm²	28 … 16 AWG
400 V/6 kV/3 ❶	300 V, 10 A
I_N 18 A	300 V, 15 A
Pole width 8 mm / 0.315 inch	
8 … 9 mm / 0.31 … 0.35 inch	





❶ 400 V = rated voltage
6 kV = rated surge voltage
3 = pollution degree
(see Section 14)

❷ Longer strips and/or mixed-color assemblies are available upon request.

Pole No.	Item No.	Pack. Unit
2-conductor terminal strip, with mounting flanges, gray		
2	**260-102**	100
3	**260-103**	100
4	**260-104**	100
5	**260-105**	100
6	**260-106**	50
7	**260-107**	50
8	**260-108**	50
9	**260-109**	50
10	**260-110**	25
11	**260-111**	25
12 ❷	**260-112**	25
2-conductor terminal strip, with snap-in mounting feet, gray		
2	**260-152**	100
3	**260-153**	100
4	**260-154**	100
5	**260-155**	100
6	**260-156**	50
7	**260-157**	50
8	**260-158**	50
9	**260-159**	50
10	**260-160**	25
11	**260-161**	25
12 ❷	**260-162**	25

Pole No.	Item No.	Pack. Unit
4-conductor terminal strip, with mounting flanges, gray		
2	**260-202**	100
3	**260-203**	100
4	**260-204**	100
5	**260-205**	100
6	**260-206**	50
7	**260-207**	50
8	**260-208**	50
9	**260-209**	50
10	**260-210**	25
11	**260-211**	25
12 ❷	**260-212**	25
4-conductor terminal strip, with snap-in mounting feet, gray		
2	**260-252**	100
3	**260-253**	100
4	**260-254**	100
5	**260-255**	100
6	**260-256**	50
7	**260-257**	50
8	**260-258**	50
9	**260-259**	50
10	**260-260**	25
11	**260-261**	25
12 ❷	**260-262**	25



Terminal strip, with mounting flanges, for screw or similar mounting types, 3.2 mm mounting hole diameter (with 209-123 Mounting Foot for DIN-35 rail)



Terminal strip with snap-in mounting feet, for 0.6 … 1.2 mm plate thickness, 3.5 mm mounting hole diameter (also for 210-154 Aluminum Rail or with 209-120 Mounting Foot for DIN-35 rail)

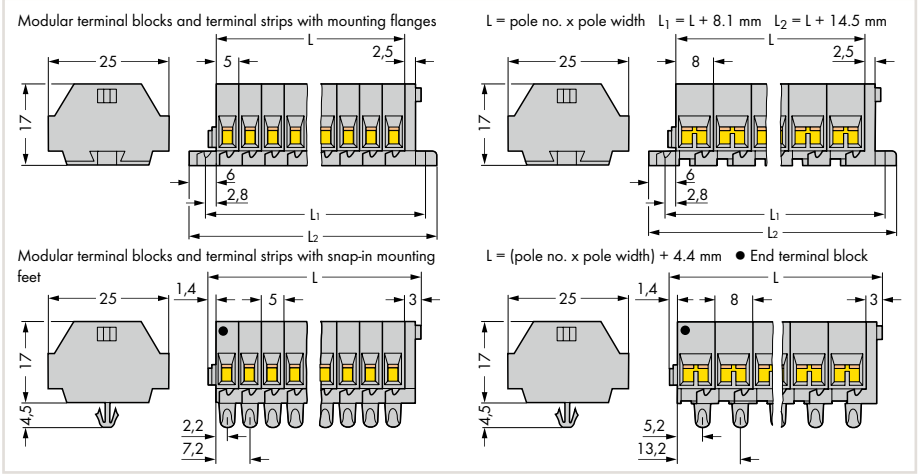

Dimensions in mm

Modular Terminal Blocks with Mounting Flange or Snap-In Mounting Foot

2.5 mm², 261 Series

0.08 … 2.5 mm²	28 … 14 AWG
500 V/6 kV/3 ❶	300 V, 15 A
I_N 24 A	300 V, 20 A
Terminal block width 6 mm / 0.236 inch	
8 … 9 mm / 0.31 … 0.35 inch	

0.08 … 2.5 mm²	28 … 14 AWG
500 V/6 kV/3 ❶	300 V, 15 A
I_N 24 A	300 V, 20 A
Terminal block width 10 mm / 0.394 inch	
8 … 9 mm / 0.31 … 0.35 inch	





❶ 500 V = rated voltage
6 kV = rated surge voltage
3 = pollution degree
(see Section 14)

❷ Suitable for Ex i applications

❸ See application notes for:
Test plug module, page 456

Color	Item No.	Pack. Unit
2-conductor terminal block, with mounting flange, for screw or similar mounting types, 3.2 mm mounting hole diameter, with mounting foot (209-123) also for DIN-35 rail		
gray	**261-301**	200 (4x50)
light gray	**261-303**	200 (4x50)
blue	**261-304** ❷	200 (4x50)
orange	**261-306**	200 (4x50)
green-yellow	**261-307**	200 (4x50)
2-conductor terminal block, with snap-in mounting foot, for 0.6 … 1.2 mm plate thickness, 3.5 mm mounting hole diameter, also for aluminum rail (210-154) or with mounting foot (209-120) for DIN-35 rail		
gray	**261-311**	200 (4x50)
light gray	**261-313**	200 (4x50)
blue	**261-314** ❷	200 (4x50)
orange	**261-316**	200 (4x50)
green-yellow	**261-317**	200 (4x50)
Space-saving, 2-conductor end terminal block, without protruding snap-in mounting foot, for terminal strips with snap-in mounting feet		
gray	**261-321**	200 (4x50)
light gray	**261-323**	200 (4x50)
blue	**261-324** ❷	200 (4x50)
orange	**261-326**	200 (4x50)
green-yellow	**261-327**	200 (4x50)

Item-Specific Accessories

Test plug module, without locking latches, snaps together, 6 mm wide ❸
gray **249-136** 100 (4x25)

Test plug module, with locking latches, snaps together, 6 mm wide ❸
gray **261-404** 100 (4x25)

261 Series Accessories

For marking accessories, see Section 13

End plate, with mounting flange
gray **261-361** 300 (6x50)

End plate, with snap-in mounting foot
gray **261-371** 300 (6x50)

Color	Item No.	Pack. Unit
4-conductor terminal block, with mounting flange, for screw or similar mounting types, 3.2 mm mounting hole diameter, with mounting foot (209-123) also for DIN-35 rail		
gray	**261-331**	200 (4x50)
light gray	**261-333**	200 (4x50)
blue	**261-334** ❷	200 (4x50)
orange	**261-336**	200 (4x50)
green-yellow	**261-337**	200 (4x50)
4-conductor terminal block, with snap-in mounting foot, for 0.6 … 1.2 mm plate thickness, 3.5 mm mounting hole diameter, also for aluminum rail (210-154) or with mounting foot (209-120) for DIN-35 rail		
gray	**261-341**	200 (4x50)
light gray	**261-343**	200 (4x50)
blue	**261-344** ❷	200 (4x50)
orange	**261-346**	200 (4x50)
green-yellow	**261-347**	200 (4x50)
Space-saving, 4-conductor end terminal block, without protruding snap-in mounting foot, for terminal strips with snap-in mounting feet		
gray	**261-351**	200 (4x50)
light gray	**261-353**	200 (4x50)
blue	**261-354** ❷	200 (4x50)
orange	**261-356**	200 (4x50)
green-yellow	**261-357**	200 (4x50)

Item-Specific Accessories

Test plug module, without locking latches, snaps together, 10 mm wide ❸
gray **249-139** 100 (4x25)

Test plug module, with locking latches, snaps together, 10 mm wide ❸
gray **261-405** 100 (4x25)

Comb-style jumper bar, insulated, I_N 16 A, gray, reduces maximum conductor size to 1.5 mm²/16 AWG
2-way **261-402** 25

Operating tool, of insulating material, for inserting comb-style jumper bars
2-way **209-132** 1

261 Series Accessories

Marking accessories, see Section 13

Aluminum carrier rail, 1000 mm long, 18 mm wide, 7 mm high
210-154 1

Plastic end stop, with WSB marker slot, for aluminum carrier rail (210-154), 6 mm wide
209-122 25

Mounting foot, for DIN-35 rail, snaps onto terminal blocks with snap-in mounting foot, 6.4 mm wide
gray **209-120** 25

Mounting foot with screw, for DIN-35 rail, can be screwed on terminal blocks with mounting flange, 6.4 mm wide
gray **209-123** 25

Mounting adapter, for DIN-35 rail, can be used as end plate, 6.5 mm wide
gray **209-137** 25

Test plug, with 500 mm cable, 2 mm Ø, max. 42 V
red **210-136** 50

Test plug, with 500 mm cable, 2.3 mm Ø, max. 42 V
yellow **210-137** 50

Operating tool with a partially insulated shaft, type 2, (3.5 x 0.5) mm blade
210-720 1

Terminal Strips with Mounting Flanges or Snap-in Mounting Feet

2.5 mm², 261 Series

0.08 … 2.5 mm²	28 … 14 AWG
500 V/6 kV/3 ❶	300 V, 15 A
I_N 24 A	300 V, 20 A
Pole width 6 mm / 0.236 inch	
8 … 9 mm / 0.31 … 0.35 inch	

0.08 … 2.5 mm²	28 … 14 AWG
500 V/6 kV/3 ❶	300 V, 15 A
I_N 24 A	300 V, 20 A
Pole width 10 mm / 0.394 inch	
8 … 9 mm / 0.31 … 0.35 inch	

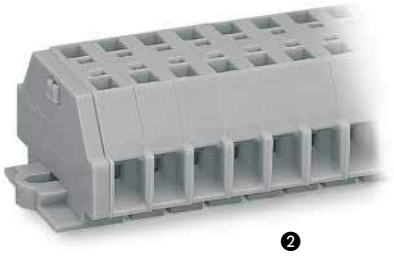

❷

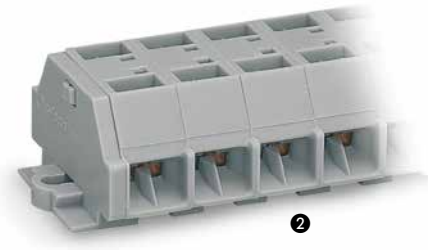

❷

❶ 500 V = rated voltage
6 kV = rated surge voltage
3 = pollution degree
(see Section 14)

❷ Terminal strips with a blue insulated housing are suitable for Ex i applications.
Item no. suffix **.../000-006** (upon request)

❸ Longer strips and/or mixed-color assemblies are available upon request.

Pole No.	Item No.	Pack. Unit
2-conductor terminal strip, with mounting flanges, gray		
2	**261-102**	100
3	**261-103**	100
4	**261-104**	100
5	**261-105**	200
6	**261-106**	50
7	**261-107**	50
8	**261-108**	50
9	**261-109**	50
10	**261-110**	25
11	**261-111**	25
12 ❸	**261-112**	25
2-conductor terminal strip, with snap-in mounting feet, gray		
2	**261-152**	100
3	**261-153**	100
4	**261-154**	100
5	**261-155**	100
6	**261-156**	50
7	**261-157**	50
8	**261-158**	50
9	**261-159**	50
10	**261-160**	25
11	**261-161**	25
12 ❸	**261-162**	25

Pole No.	Item No.	Pack. Unit
4-conductor terminal strip, with mounting flanges, gray		
2	**261-202**	100
3	**261-203**	100
4	**261-204**	100
5	**261-205**	100
6	**261-206**	50
7	**261-207**	50
8	**261-208**	50
9	**261-209**	50
10	**261-210**	25
11	**261-211**	25
12 ❸	**261-212**	25
4-conductor terminal strip, with snap-in mounting feet, gray		
2	**261-252**	100
3	**261-253**	100
4	**261-254**	100
5	**261-255**	100
6	**261-256**	50
7	**261-257**	50
8	**261-258**	50
9	**261-259**	50
10	**261-260**	25
11	**261-261**	25
12 ❸	**261-262**	25



Terminal strip, with mounting flanges, for screw or similar mounting types, 3.2 mm mounting hole diameter (with 209-123 Mounting Foot for DIN-35 rail)



Terminal strip with snap-in mounting feet, for 0.6 … 1.2 mm plate thickness, 3.5 mm mounting hole diameter (also for 210-154 Aluminum Rail or with 209-120 Mounting Foot for DIN-35 rail)

Modular terminal blocks and terminal strips with mounting flanges

L = pole no. x pole width L_1 = L + 8.1 mm L_2 = L + 14.5 mm

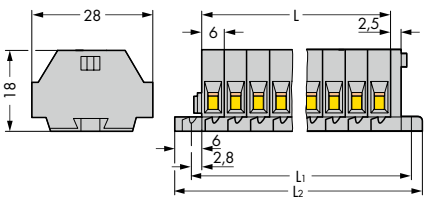

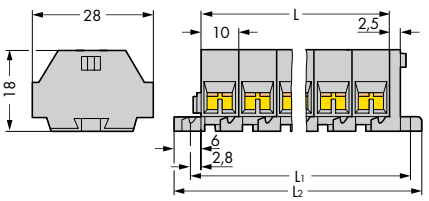

Modular terminal blocks and terminal strips with snap-in mounting feet

L = (pole no. x pole width) + 4.4 mm ● End terminal block

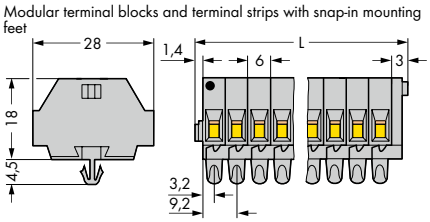

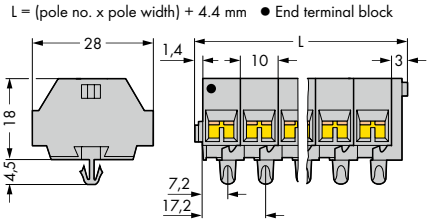

Dimensions in mm

CAGE CLAMP®

Modular Terminal Blocks with Push-Buttons on One Side, Mounting Flange or Snap-In Mounting Foot

2.5 mm², 261 Series

0.08 ... 2.5 mm²	28 ... 14 AWG
500 V/6 kV/3 ❶	300 V, 15 A
I_N 24 A	300 V, 20 A

Terminal block width 6 mm / 0.236 inch
8 ... 9 mm / 0.31 ... 0.35 inch

0.08 ... 2.5 mm²	28 ... 14 AWG
500 V/6 kV/3 ❶	300 V, 15 A
I_N 24 A	300 V, 20 A

Terminal block width 10 mm / 0.394 inch
8 ... 9 mm / 0.31 ... 0.35 inch





❶ 500 V = rated voltage
6 kV = rated surge voltage
3 = pollution degree
(see Section 14)

❷ Suitable for Ex i applications

Color	Item No.	Pack. Unit
2-conductor terminal block, with push-button on one side, with mounting flange, for screw or similar mounting types, 3.2 mm mounting hole diameter, with mounting foot (209-123) also for DIN-35 rail		
gray	**261-301/331-000**	200 (4x50)
light gray	**261-303/331-000**	200 (4x50)
blue	**261-304/331-000** ❷	200 (4x50)
orange	**261-306/331-000**	200 (4x50)
green-yellow	**261-307/331-000**	200 (4x50)
2-conductor terminal block, with push-button on one side, with snap-in mounting foot, for 0.6 ... 1.2 mm plate thickness, 3.5 mm mounting hole diameter, also for aluminum rail (210-154) or with mounting foot (209-120) for DIN-35 rail		
gray	**261-311/331-000**	200 (4x50)
light gray	**261-313/331-000**	200 (4x50)
blue	**261-314/331-000** ❷	200 (4x50)
orange	**261-316/331-000**	200 (4x50)
green-yellow	**261-317/331-000**	200 (4x50)
Space-saving, 2-conductor end terminal block, with push-button on one side, without protruding snap-in mounting foot, for terminal strips with snap-in mounting feet		
gray	**261-321/331-000**	200 (4x50)
light gray	**261-323/331-000**	200 (4x50)
blue	**261-324/331-000** ❷	200 (4x50)
orange	**261-326/331-000**	200 (4x50)
green-yellow	**261-327/331-000**	200 (4x50)

Color	Item No.	Pack. Unit
4-conductor terminal block, with push-buttons on one side, with mounting flange, for screw or similar mounting types, 3.2 mm mounting hole diameter, with mounting foot (209-123) also for DIN-35 rail		
gray	**261-331/332-000**	200 (4x50)
light gray	**261-333/332-000**	200 (4x50)
blue	**261-334/332-000** ❷	200 (4x50)
orange	**261-336/332-000**	200 (4x50)
green-yellow	**261-337/332-000**	200 (4x50)
4-conductor terminal block, with push-buttons on one side, with snap-in mounting foot, for 0.6 ... 1.2 mm plate thickness, 3.5 mm mounting hole diameter, also for aluminum rail (210-154) or with mounting foot (209-120) for DIN-35 rail		
gray	**261-341/332-000**	200 (4x50)
light gray	**261-343/332-000**	200 (4x50)
blue	**261-344/332-000** ❷	200 (4x50)
orange	**261-346/332-000**	200 (4x50)
green-yellow	**261-347/332-000**	200 (4x50)
Space-saving, 4-conductor end terminal block, with push-buttons on one side, without protruding snap-in mounting foot, for terminal strips with snap-in mounting feet		
gray	**261-351/332-000**	200 (4x50)
light gray	**261-353/332-000**	200 (4x50)
blue	**261-354/332-000** ❷	200 (4x50)
orange	**261-356/332-000**	200 (4x50)
green-yellow	**261-357/332-000**	200 (4x50)

261 Series Accessories

For marking accessories, see Section 13

End plate, with mounting flange

gray **261-361** 300 (6x50)

End plate, with snap-in mounting foot

gray **261-371** 300 (6x50)

Comb-style jumper bar, insulated, I_N 16 A, gray, reduces maximum conductor size to 1.5 mm²/16 AWG

2-way **261-402** 25

Operating tool, of insulating material, for inserting comb-style jumper bars

2-way **209-132** 1

Aluminum carrier rail, 1000 mm long, 18 mm wide, 7 mm high

210-154 1

Plastic end stop, with WSB marker slot, for aluminum carrier rail (210-154), 6 mm wide

209-122 25

Mounting foot, for DIN-35 rail, snaps onto terminal blocks with snap-in mounting foot, 6.4 mm wide

gray **209-120** 25

Mounting foot with screw, for DIN-35 rail, can be screwed on terminal blocks with mounting flange, 6.4 mm wide

gray **209-123** 25

261 Series Accessories

Marking accessories, see Section 13

Mounting adapter, for DIN-35 rail, can be used as end plate, 6.5 mm wide

gray **209-137** 25

Operating tool with a partially insulated shaft, type 2, (3.5 x 0.5) mm blade

210-720 1

8

Overview of certification organizations, see page 654

CAGE CLAMP®

Terminal Strips with Push-Buttons on One Side, Mounting Flanges or Snap-In Mounting Feet

2.5 mm², 261 Series

0.08 ... 2.5 mm² | 28 ... 14 AWG 500 V/6 kV/3 ❶ I_N 24 A Pole width 6 mm / 0.236 inch 8 ... 9 mm / 0.31 ... 0.35 inch	0.08 ... 2.5 mm² | 28 ... 14 AWG 500 V/6 kV/3 ❶ I_N 24 A Pole width 10 mm / 0.394 inch 8 ... 9 mm / 0.31 ... 0.35 inch

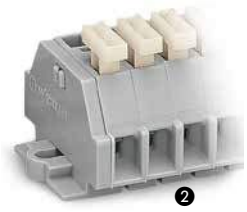
❷


❷

❶ 500 V = rated voltage
6 kV = rated surge voltage
3 = pollution degree
(see Section 14)

❷ Terminal strips with a blue insulated housing are suitable for Ex i applications.
Item no. suffix **.../000-006 (upon request)**

❸ Longer strips and/or mixed-color assemblies are available upon request.

Pole No.	Item No.	Pack. Unit
2-conductor terminal strip, with push-buttons on one side, with mounting flanges, gray		
2	**261-102/331-000**	100
3	**261-103/331-000**	100
4	**261-104/331-000**	100
5	**261-105/331-000**	200
6	**261-106/331-000**	50
7	**261-107/331-000**	50
8	**261-108/331-000**	50
9	**261-109/331-000**	50
10	**261-110/331-000**	25
11	**261-111/331-000**	25
12 ❸	**261-112/331-000**	25
2-conductor terminal strip, with push-buttons on one side, with snap-in mounting feet, gray		
2	**261-152/331-000**	100
3	**261-153/331-000**	100
4	**261-154/331-000**	100
5	**261-155/331-000**	100
6	**261-156/331-000**	50
7	**261-157/331-000**	50
8	**261-158/331-000**	50
9	**261-159/331-000**	50
10	**261-160/331-000**	25
11	**261-161/331-000**	25
12 ❸	**261-162/331-000**	25

Pole No.	Item No.	Pack. Unit
4-conductor terminal strip, with push-buttons on one side, with mounting flanges, gray		
2	**261-202/332-000**	100
3	**261-203/332-000**	100
4	**261-204/332-000**	100
5	**261-205/332-000**	100
6	**261-206/332-000**	50
7	**261-207/332-000**	50
8	**261-208/332-000**	50
9	**261-209/332-000**	50
10	**261-210/332-000**	50
11	**261-211/332-000**	25
12 ❸	**261-212/332-000**	25
4-conductor terminal strip, with push-buttons on one side, with snap-in mounting feet, gray		
2	**261-252/332-000**	100
3	**261-253/332-000**	100
4	**261-254/332-000**	100
5	**261-255/332-000**	100
6	**261-256/332-000**	50
7	**261-257/332-000**	50
8	**261-258/332-000**	50
9	**261-259/332-000**	50
10	**261-260/332-000**	25
11	**261-261/332-000**	100
12 ❸	**261-262/332-000**	25

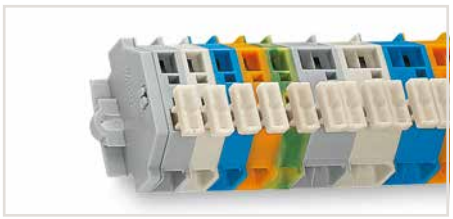

Terminal strip, with mounting flanges, for screw or similar mounting types, 3.2 mm mounting hole diameter (with 209-123 Mounting Foot for DIN-35 rail)

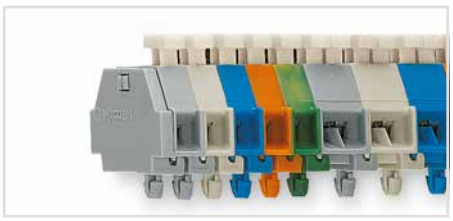

Terminal strip with snap-in mounting feet, for 0.6 ... 1.2 mm plate thickness, 3.5 mm mounting hole diameter (also for 210-154 Aluminum Rail or with 209-120 Mounting Foot for DIN-35 rail)

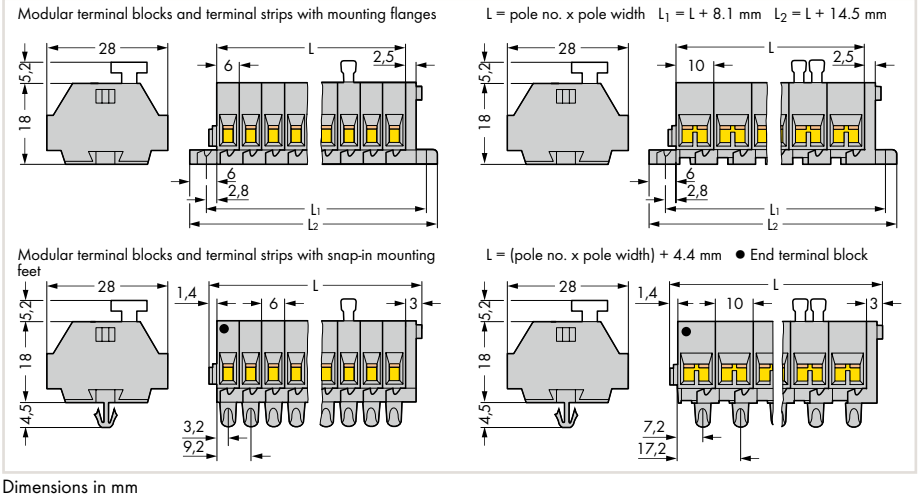

Dimensions in mm

CAGE CLAMP®

Modular Terminal Blocks with Push-Buttons on Both Sides, Mounting Flange or Snap-In Mounting Foot

2.5 mm², 261 Series

0.08 … 2.5 mm² / 28 … 14 AWG 500 V/6 kV/3 ❶ I_N 24 A	0.08 … 2.5 mm² / 28 … 14 AWG 500 V/6 kV/3 ❶ I_N 24 A
Terminal block width 6 mm / 0.236 inch 8 … 9 mm / 0.31 … 0.35 inch	Terminal block width 10 mm / 0.394 inch 8 … 9 mm / 0.31 … 0.35 inch





❶ 500 V = rated voltage
6 kV = rated surge voltage
3 = pollution degree
(see Section 14)

❷ Suitable for Ex i applications

Color	Item No.	Pack. Unit
2-conductor terminal block, with push-buttons on both sides, with mounting flange, for screw or similar mounting types, 3.2 mm mounting hole diameter, with mounting foot (209-123) also for DIN-35 rail		
gray	**261-301/341-000**	200 (4x50)
light gray	**261-303/341-000**	200 (4x50)
blue	**261-304/341-000** ❷	200 (4x50)
orange	**261-306/341-000**	200 (4x50)
green-yellow	**261-307/341-000**	200 (4x50)
2-conductor terminal block, with push-buttons on both sides, with snap-in mounting foot, for 0.6 … 1.2 mm plate thickness, 3.5 mm mounting hole diameter, also for aluminum rail (210-154) or with mounting foot (209-120) for DIN-35 rail		
gray	**261-311/341-000**	200 (4x50)
light gray	**261-313/341-000**	200 (4x50)
blue	**261-314/341-000** ❷	200 (4x50)
orange	**261-316/341-000**	200 (4x50)
green-yellow	**261-317/341-000**	200 (4x50)
Space-saving, 2-conductor end terminal block, with push-buttons on both sides, without protruding snap-in mounting foot, for terminal strips with snap-in mounting feet		
gray	**261-321/341-000**	200 (4x50)
light gray	**261-323/341-000**	200 (4x50)
blue	**261-324/341-000** ❷	200 (4x50)
orange	**261-326/341-000**	200 (4x50)
green-yellow	**261-327/341-000**	200 (4x50)

Color	Item No.	Pack. Unit
4-conductor terminal block, with push-buttons on both sides, with mounting flange, for screw or similar mounting types, 3.2 mm mounting hole diameter, with mounting foot (209-123) also for DIN-35 rail		
gray	**261-331/342-000**	200 (4x50)
light gray	**261-333/342-000**	200 (4x50)
blue	**261-334/342-000** ❷	200 (4x50)
orange	**261-336/342-000**	200 (4x50)
green-yellow	**261-337/342-000**	200 (4x50)
4-conductor terminal block, with push-buttons on both sides, with snap-in mounting foot, for 0.6 … 1.2 mm plate thickness, 3.5 mm mounting hole diameter, also for aluminum rail (210-154) or with mounting foot (209-120) for DIN-35 rail		
gray	**261-341/342-000**	200 (4x50)
light gray	**261-343/342-000**	200 (4x50)
blue	**261-344/342-000** ❷	200 (4x50)
orange	**261-346/342-000**	200 (4x50)
green-yellow	**261-347/342-000**	200 (4x50)
Space-saving, 4-conductor end terminal block, with push-buttons on both sides, without protruding snap-in mounting foot, for terminal strips with snap-in mounting feet		
gray	**261-351/342-000**	200 (4x50)
light gray	**261-353/342-000**	200 (4x50)
blue	**261-354/342-000**	200 (4x50)
orange	**261-356/342-000**	200 (4x50)
green-yellow	**261-357/342-000**	200 (4x50)

261 Series Accessories

Marking accessories, see Section 13

Mounting adapter, for DIN-35 rail, can be used as end plate, 6.5 mm wide



gray **209-137** 25

Operating tool with a partially insulated shaft, type 2, (3.5 x 0.5) mm blade



210-720 1

261 Series Accessories

For marking accessories, see Section 13

End plate, with mounting flange



gray **261-361** 300 (6x50)

End plate, with snap-in mounting foot



gray **261-371** 300 (6x50)

Comb-style jumper bar, insulated, I_N 16 A, gray, reduces maximum conductor size to 1.5 mm²/16 AWG



2-way **261-402** 25

Operating tool, of insulating material, for inserting comb-style jumper bars



2-way **209-132** 1

Aluminum carrier rail, 1000 mm long, 18 mm wide, 7 mm high



210-154 1

Plastic end stop, with WSB marker slot, for aluminum carrier rail (210-154), 6 mm wide



209-122 25

Mounting foot, for DIN-35 rail, snaps onto terminal blocks with snap-in mounting foot, 6.4 mm wide



gray **209-120** 25

Mounting foot with screw, for DIN-35 rail, can be screwed on terminal blocks with mounting flange, 6.4 mm wide



gray **209-123** 25

CAGE CLAMP®

Terminal Strips with Push-Buttons on Both Sides, Mounting Flanges or Snap-In Mounting Feet

2.5 mm², 261 Series

0.08 ... 2.5 mm² | 28 ... 14 AWG 500 V/6 kV/3 ❶ I_N 24 A Pole width 6 mm / 0.236 inch 8 ... 9 mm / 0.31 ... 0.35 inch	0.08 ... 2.5 mm² | 28 ... 14 AWG 500 V/6 kV/3 ❶ I_N 24 A Pole width 10 mm / 0.394 inch 8 ... 9 mm / 0.31 ... 0.35 inch

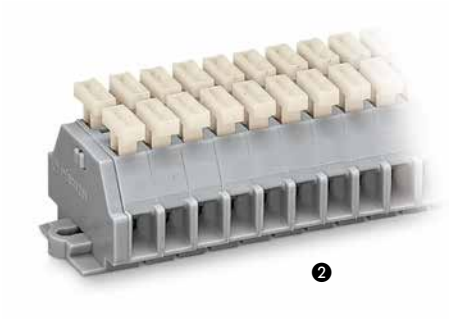

❷

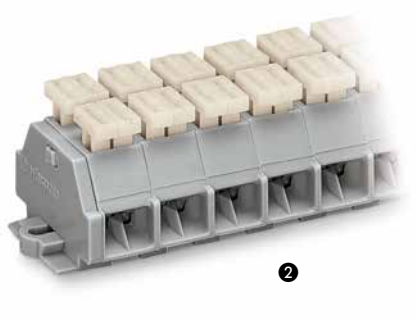

❷

❶ 500 V = rated voltage
6 kV = rated surge voltage
3 = pollution degree
(see Section 14)

❷ Terminal strips with a blue insulated housing are suitable for Ex i applications.
Item no. suffix **.../000-006 (upon request)**

❸ Longer strips and/or mixed-color assemblies are available upon request.

Pole No.	Item No.	Pack. Unit
2-conductor terminal strip, with push-buttons on both sides, with mounting flanges, gray		
2	**261-102/341-000**	100
3	**261-103/341-000**	100
4	**261-104/341-000**	50
5	**261-105/341-000**	100
6	**261-106/341-000**	25
7	**261-107/341-000**	50
8	**261-108/341-000**	50
9	**261-109/341-000**	100
10	**261-110/341-000**	25
11	**261-111/341-000**	25
12 ❸	**261-112/341-000**	25
2-conductor terminal strip, with push-buttons on both sides, with snap-in mounting feet, gray		
2	**261-152/341-000**	100
3	**261-153/341-000**	100
4	**261-154/341-000**	50
5	**261-155/341-000**	100
6	**261-156/341-000**	100
7	**261-157/341-000**	50
8	**261-158/341-000**	50
9	**261-159/341-000**	50
10	**261-160/341-000**	25
11	**261-161/341-000**	25
12 ❸	**261-162/341-000**	100

Pole No.	Item No.	Pack. Unit
4-conductor terminal strip, with push-buttons on both sides, with mounting flanges, gray		
2	**261-202/342-000**	100
3	**261-203/342-000**	100
4	**261-204/342-000**	100
5	**261-205/342-000**	100
6	**261-206/342-000**	50
7	**261-207/342-000**	50
8	**261-208/342-000**	100
9	**261-209/342-000**	50
10	**261-210/342-000**	25
11	**261-211/342-000**	25
12 ❸	**261-212/342-000**	50
4-conductor terminal strip, with push-buttons on both sides, with snap-in mounting feet, gray		
2	**261-252/342-000**	100
3	**261-253/342-000**	100
4	**261-254/342-000**	100
5	**261-255/342-000**	100
6	**261-256/342-000**	50
7	**261-257/342-000**	50
8	**261-258/342-000**	50
9	**261-259/342-000**	50
10	**261-260/342-000**	25
11	**261-261/342-000**	100
12 ❸	**261-262/342-000**	25



Terminal strip, with mounting flanges, for screw or similar mounting types, 3.2 mm mounting hole diameter (with 209-123 Mounting Foot for DIN-35 rail)

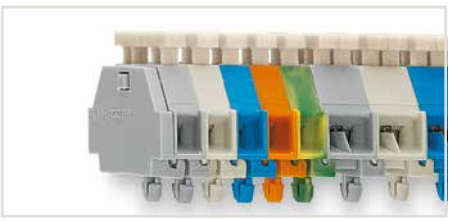

Terminal strip with snap-in mounting feet, for 0.6 ... 1.2 mm plate thickness, 3.5 mm mounting hole diameter (also for 210-154 Aluminum Rail or with 209-120 Mounting Foot for DIN-35 rail)

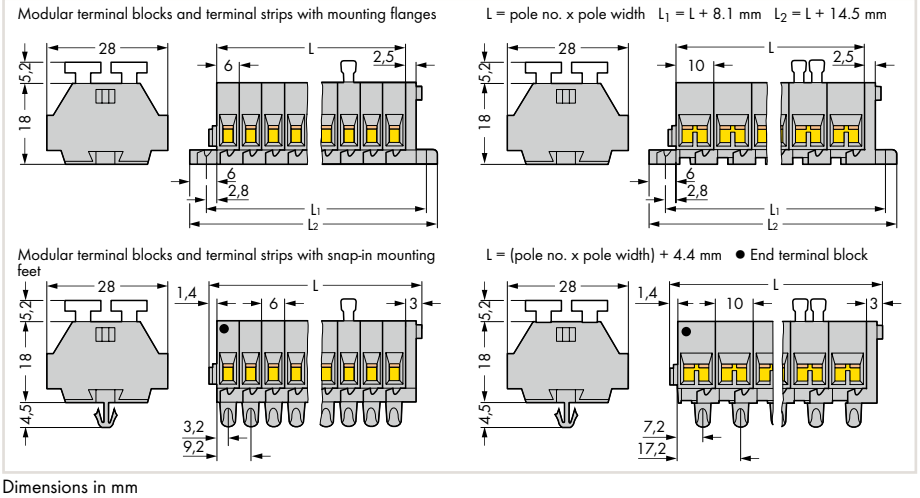

Dimensions in mm

CAGE CLAMP®

Modular Terminal Blocks with Mounting Flange and Marker Slot for Mini-WSB Quick Marking System

2.5 mm², 261 Series

0.08 ... 2.5 mm²	28 ... 14 AWG
500 V/6 kV/3 ❶	300 V, 15 A
I_N 24 A	300 V, 20 A

Terminal block width 6 mm / 0.236 inch
8 ... 9 mm / 0.31 ... 0.35 inch

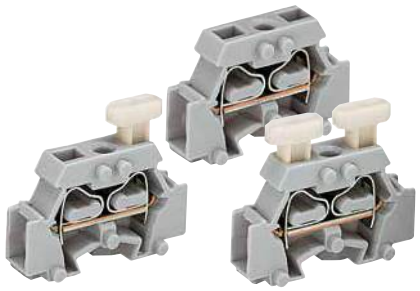

❶ 500 V = rated voltage
6 kV = rated surge voltage
3 = pollution degree
(see Section 14)

Color	Item No.	Pack. Unit
2-conductor terminal block, with mounting flange		
gray	**261-411**	200 (4x50)
2-conductor terminal block, with push-button on one side, with mounting flange		
gray	**261-411/331-000**	200 (4x50)
2-conductor terminal block, with push-buttons on both sides, with mounting flange		
gray	**261-411/341-000**	200 (4x50)

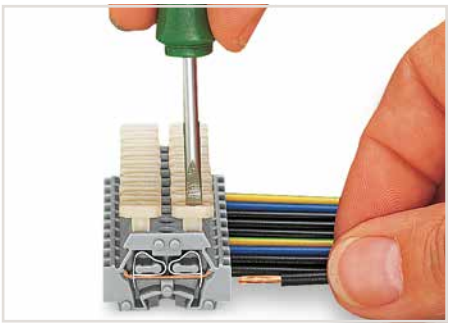

CAGE CLAMP® connection
Inserting a conductor via push-button.

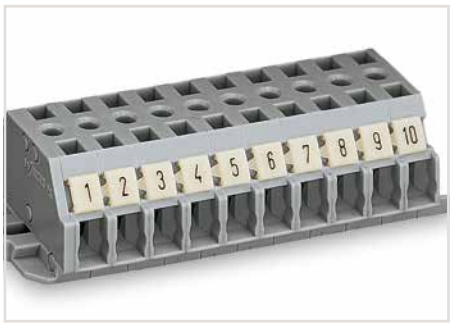

Terminal strip with marker slot for Mini-WSB Quick Marking System

261 Series Accessories

Appropriate marking system:
Mini-WSB (see Section 13)

End plate, with mounting flange			
	gray	**261-410**	300 (6x50)
Comb-style jumper bar, insulated, I_N 16 A, gray, reduces maximum conductor size to 1.5 mm²/16 AWG			
	2-way	**261-402**	25
Operating tool, of insulating material, for inserting comb-style jumper bars			
	2-way	**209-132**	1
Mounting foot with screw, for DIN-35 rail, can be screwed on terminal blocks with mounting flange, 6.4 mm wide			
	gray	**209-123**	25
Mounting adapter, for DIN-35 rail, can be used as end plate, 6.5 mm wide			
	gray	**209-137**	25
Test plug, with 500 mm cable, 2 mm Ø, max. 42 V			
	red	**210-136**	50
Mini-WSB Quick marking system, white, 10 strips with 10 markers per card, 5 mm wide markers			
	plain	**248-501**	5
Operating tool with a partially insulated shaft, type 2, (3.5 x 0.5) mm blade			
		**210-720**	1



Testing with voltage tester.

8

CAGE CLAMP®

Terminal Strips with Mounting Flanges and Marker Slot for Mini-WSB Quick Marking System

2.5 mm², 261 Series

0.08 … 2.5 mm²	28 … 14 AWG
500 V/6 kV/3 ❶	300 V, 15 A
I_N 24 A	300 V, 20 A
Pole width 6 mm / 0.236 inch	
8 … 9 mm / 0.31 … 0.35 inch	

0.08 … 2.5 mm²	28 … 14 AWG
500 V/6 kV/3 ❶	300 V, 15 A
I_N 24 A	300 V, 20 A
Pole width 6 mm / 0.236 inch	
8 … 9 mm / 0.31 … 0.35 inch	

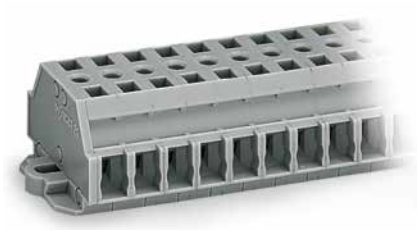

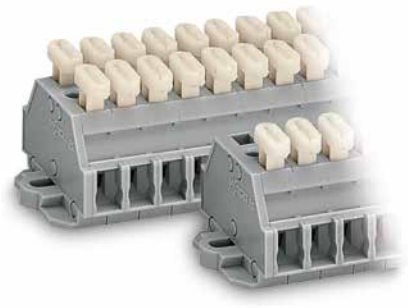

❶ 500 V = rated voltage
6 kV = rated surge voltage
3 = pollution degree
(see Section 14)

❷ Longer strips assemblies are available upon request.

Pole No.	Item No.	Pack. Unit
2-conductor terminal strip, with mounting flanges, gray		
2	**261-422**	100
3	**261-423**	100
4	**261-424**	100
5	**261-425**	100
6	**261-426**	50
7	**261-427**	50
8	**261-428**	50
9	**261-429**	50
10	**261-430**	25
11	**261-431**	25
12 ❷	**261-432**	25

Pole No.	Item No.	Pack. Unit
2-conductor terminal strip, with push-buttons on one side, with mounting flanges, gray		
2	**261-422/331-000**	100
3	**261-423/331-000**	100
4	**261-424/331-000**	100
5	**261-425/331-000**	100
6	**261-426/331-000**	50
7	**261-427/331-000**	50
8	**261-428/331-000**	50
9	**261-429/331-000**	50
10	**261-430/331-000**	25
11	**261-431/331-000**	25
12 ❷	**261-432/331-000**	25
2-conductor terminal strip, with push-buttons on both sides, with mounting flanges, gray		
2	**261-422/341-000**	100
3	**261-423/341-000**	100
4	**261-424/341-000**	100
5	**261-425/341-000**	100
6	**261-426/341-000**	50
7	**261-427/341-000**	50
8	**261-428/341-000**	50
9	**261-429/341-000**	50
10	**261-430/341-000**	25
11	**261-431/341-000**	25
12 ❷	**261-432/341-000**	25

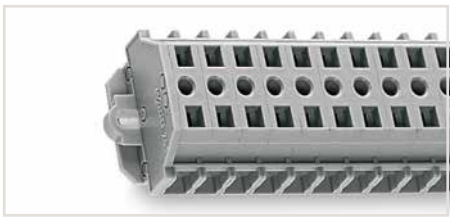

Terminal strip, with mounting flanges, for screw or similar mounting types, 3.2 mm mounting hole diameter (with 209-123 Mounting Foot for DIN-35 rail)

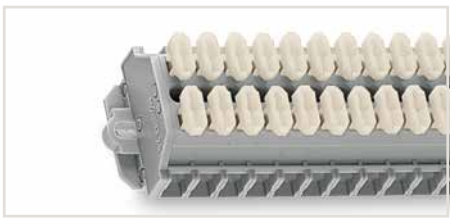

Terminal strip, with mounting flanges, for screw or similar mounting types, 3.2 mm mounting hole diameter (with 209-123 Mounting Foot for DIN-35 rail)

Modular terminal blocks and terminal strips with mounting flanges

L = pole no. x pole width L_1 = L + 7.2 mm L_2 = L + 13.6 mm

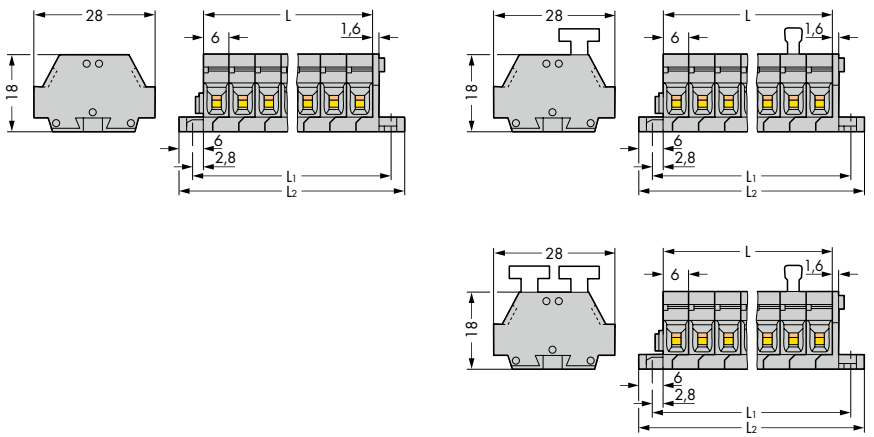

Dimensions in mm

Modular Terminal Blocks with Mounting Flange or Snap-In Mounting Foot

4 mm², 262 Series

0.08 … 4 mm²	28 … 12 AWG
630 V/8 kV/3 ❶	300 V, 20 A
I_N 24 A	300 V, 20 A
Terminal block width 7 mm / 0.276 inch	
9 … 10 mm / 0.35 … 0.39 inch	

0.08 … 4 mm²	28 … 12 AWG
630 V/8 kV/3 ❶	300 V, 20 A
I_N 32 A	300 V, 20 A
Terminal block width 12 mm / 0.472 inch	
9 … 10 mm / 0.35 … 0.39 inch	

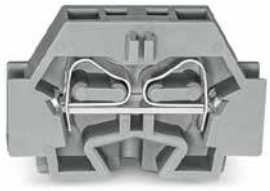



❶ 630 V = rated voltage
8 kV = rated surge voltage
3 = pollution degree
(see Section 14)

❷ Suitable for Ex i applications

❸ See application notes for:
Test plug module, page 456

Color	Item No.	Pack. Unit
2-conductor terminal block, with mounting flange, for screw or similar mounting types, 3.2 mm mounting hole diameter, with mounting foot (209-123) also for DIN-35 rail		
gray	**262-301**	100 (2x50)
blue	**262-304** ❷	100 (2x50)
orange	**262-306**	100 (2x50)
green-yellow	**262-307**	100 (2x50)
2-conductor terminal block, with snap-in mounting foot, for 0.6 … 1.2 mm plate thickness, 3.5 mm mounting hole diameter, also for aluminum rail (210-154) or with mounting foot (209-120) for DIN-35 rail		
gray	**262-311**	100 (2x50)
blue	**262-314** ❷	100 (2x50)
orange	**262-316**	100 (2x50)
green-yellow	**262-317**	100 (2x50)
Space-saving, 2-conductor end terminal block, without protruding snap-in mounting foot, for terminal strips with snap-in mounting feet		
gray	**262-321**	100 (2x50)
blue	**262-324** ❷	100 (2x50)
orange	**262-326**	100 (2x50)
green-yellow	**262-327**	100 (2x50)

Item-Specific Accessories

Test plug module, without locking latches, snaps together, 7 mm wide ❸



gray **249-137** 100 (4x25)

262 Series Accessories

For marking accessories, see Section 13

End plate, with mounting flange



gray **262-361** 50

End plate, with snap-in mounting foot



gray **262-371** 50

Comb-style jumper bar, insulated, I_N 16 A, gray, reduces maximum conductor size to 2.5 mm²/14 AWG



2-way **262-402** 25

Operating tool, of insulating material, for inserting comb-style jumper bars



2-way **209-132** 1

Color	Item No.	Pack. Unit
4-conductor terminal block, with mounting flange, for screw or similar mounting types, 3.2 mm mounting hole diameter, with mounting foot (209-123) also for DIN-35 rail		
gray	**262-331**	100 (2x50)
blue	**262-334** ❷	100 (2x50)
orange	**262-336**	100 (2x50)
green-yellow	**262-337**	100 (2x50)
4-conductor terminal block, with snap-in mounting foot, for 0.6 … 1.2 mm plate thickness, 3.5 mm mounting hole diameter, also for aluminum rail (210-154) or with mounting foot (209-120) for DIN-35 rail		
gray	**262-341**	100 (2x50)
blue	**262-344** ❷	100 (2x50)
orange	**262-346**	100 (2x50)
green-yellow	**262-347**	100 (2x50)
Space-saving, 4-conductor end terminal block, without protruding snap-in mounting foot, for terminal strips with snap-in mounting feet		
gray	**262-351**	100 (2x50)
blue	**262-354** ❷	100 (2x50)
orange	**262-356**	100 (2x50)
green-yellow	**262-357**	100 (2x50)

Item-Specific Accessories

Test plug module, without locking latches, snaps together, 12 mm wide ❸



gray **249-140** 100 (4x25)

Aluminum carrier rail, 1000 mm long, 18 mm wide, 7 mm high



210-154 1

Plastic end stop, with WSB marker slot, for aluminum carrier rail (210-154), 6 mm wide



209-122 25

Mounting foot, for DIN-35 rail, snaps onto terminal blocks with snap-in mounting foot, 6.4 mm wide



gray **209-120** 25

Mounting foot with screw, for DIN-35 rail, can be screwed on terminal blocks with mounting flange, 6.4 mm wide



gray **209-123** 25

262 Series Accessories

Marking accessories, see Section 13

Mounting adapter, for DIN-35 rail, can be used as end plate, 6.5 mm wide



gray **209-137** 25

Test plug, with 500 mm cable, 2 mm Ø, max. 42 V



red **210-136** 50

Test plug, with 500 mm cable, 2.3 mm Ø, max. 42 V



yellow **210-137** 50

Operating tool with a partially insulated shaft, type 2, (3.5 x 0.5) mm blade



210-720 1

Terminal Strips with Mounting Flanges or Snap-in Mounting Feet

4 mm², 262 Series

0.08 … 4 mm² 630 V/8 kV/3 ❶ I_N 24 A	28 … 12 AWG 300 V, 20 A 300 V, 20 A
Pole width 7 mm / 0.276 inch 9 … 10 mm / 0.35 … 0.39 inch	

0.08 … 4 mm² 630 V/8 kV/3 ❶ I_N 32 A	28 … 12 AWG 300 V, 20 A 300 V, 20 A
Pole width 12 mm / 0.472 inch 9 … 10 mm / 0.35 … 0.39 inch	

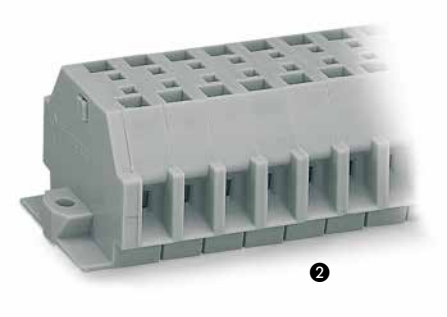
❷

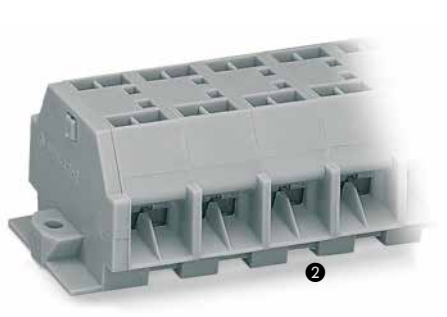
❷

❶ 630 V = rated voltage
8 kV = rated surge voltage
3 = pollution degree
(see Section 14)

❷ Terminal strips with a blue insulated housing are suitable for Ex i applications.
Item no. suffix **…/000-006 (upon request)**

❸ Longer strips and/or mixed-color assemblies are available upon request.

Pole No.	Item No.	Pack. Unit
2-conductor terminal strip, with mounting flanges, gray		
2	**262-102**	100
3	**262-103**	100
4	**262-104**	100
5	**262-105**	100
6	**262-106**	100
7	**262-107**	100
8	**262-108**	100
9	**262-109**	50
10	**262-110**	25
11	**262-111**	25
12 ❸	**262-112**	25
2-conductor terminal strip, with snap-in mounting feet, gray		
2	**262-152**	100
3	**262-153**	100
4	**262-154**	100
5	**262-155**	100
6	**262-156**	50
7	**262-157**	50
8	**262-158**	50
9	**262-159**	50
10	**262-160**	25
11	**262-161**	25
12 ❸	**262-162**	25

Pole No.	Item No.	Pack. Unit
4-conductor terminal strip, with mounting flanges, gray		
2	**262-202**	100
3	**262-203**	100
4	**262-204**	100
5	**262-205**	100
6	**262-206**	50
7	**262-207**	50
8	**262-208**	50
9	**262-209**	50
10	**262-210**	25
11	**262-211**	25
12 ❸	**262-212**	25
4-conductor terminal strip, with snap-in mounting feet, gray		
2	**262-252**	100
3	**262-253**	100
4	**262-254**	100
5	**262-255**	100
6	**262-256**	50
7	**262-257**	50
8	**262-258**	50
9	**262-259**	50
10	**262-260**	25
11	**262-261**	25
12 ❸	**262-262**	25



Terminal strip, with mounting flanges, for screw or similar mounting types, 3.2 mm mounting hole diameter (with 209-123 Mounting Foot for DIN-35 rail)



Terminal strip with snap-in mounting feet, for 0.6 … 1.2 mm plate thickness, 3.5 mm mounting hole diameter (also for 210-154 Aluminum Rail or with 209-120 Mounting Foot for DIN-35 rail)

Modular terminal blocks and terminal strips with mounting flanges

L = pole no. x pole width L_1 = L + 8.1 mm L_2 = L + 14.5 mm

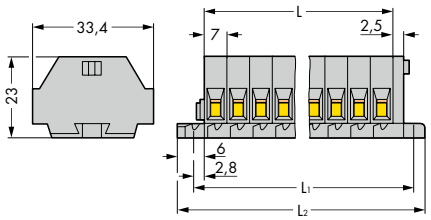

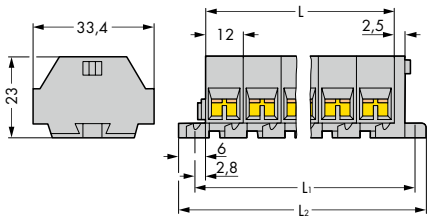

Modular terminal blocks and terminal strips with snap-in mounting feet

L = (pole no. x pole width) + 4.4 mm ● End terminal block

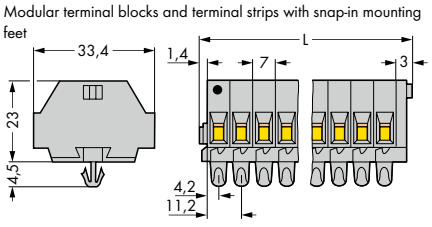

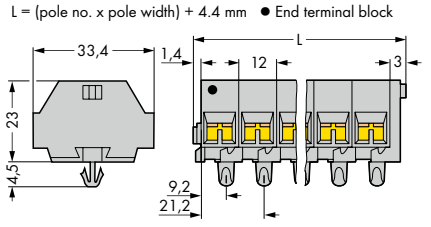

Dimensions in mm

Modular Ex Terminal Blocks with Mounting Flange or Snap-In Mounting Foot

4 mm², 262 Series

0.5 … 4 mm² ❶	20 … 12 AWG
550 V	300 V, 20 A
I_N 23 A	300 V, 20 A

Terminal block width 7 mm / 0.276 inch
9 … 10 mm / 0.35 … 0.39 inch

0.5 … 4 mm² ❶	20 … 12 AWG
550 V	300 V, 20 A
I_N 30 A	300 V, 20 A

Terminal block width 12 mm / 0.472 inch
9 … 10 mm / 0.35 … 0.39 inch





❶ Using crimped ferrules for corrosion protection, the rated cross section is reduced by one size. For conductor types and conductor preparation, see Section 14 "Electrical Equipment for Hazardous Environments."

Color	Item No.	Pack. Unit
2-conductor Ex e II terminal block, with mounting flange, for screw or similar mounting types, 3.2 mm mounting hole diameter, with mounting foot (209-123) also for DIN-35 rail		
light gray	**262-130**	100 (2x50)
2-conductor Ex e II terminal block, with snap-in mounting foot, for 0.6 … 1.2 mm plate thickness, 3.5 mm mounting hole diameter, also for aluminum rail (210-154) or with mounting foot (209-120) for DIN-35 rail		
light gray	**262-180**	100 (2x50)
2-conductor Ex e II space-saving end terminal block, without protruding snap-in mounting foot, for terminal strips with snap-in mounting feet		
light gray	**262-181**	100 (2x50)

Color	Item No.	Pack. Unit
4-conductor Ex e II terminal block, with mounting flange, for screw or similar mounting types, 3.2 mm mounting hole diameter, with mounting foot (209-123) also for DIN-35 rail		
light gray	**262-230**	100 (2x50)
4-conductor Ex e II terminal block, with snap-in mounting foot, for 0.6 … 1.2 mm plate thickness, 3.5 mm mounting hole diameter, also for aluminum rail (210-154) or with mounting foot (209-120) for DIN-35 rail		
light gray	**262-280**	100 (2x50)
4-conductor Ex e II space-saving end terminal block, without protruding snap-in mounting foot, for terminal strips with snap-in mounting feet		
light gray	**262-281**	100 (2x50)

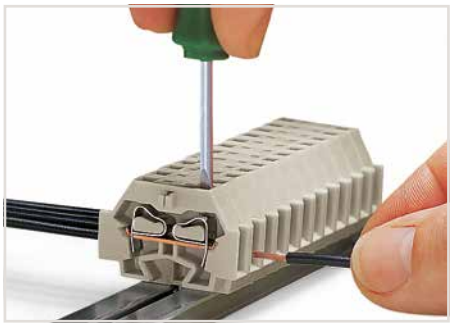

CAGE CLAMP® connection
Inserting a conductor via screwdriver.

262 Series Accessories

For marking accessories, see Section 13

End plate, with mounting flange	light gray	**262-363**	50
End plate, with snap-in mounting foot	light gray	**262-373**	50
Comb-style jumper bar, insulated, I_N 16 A, gray, reduces maximum conductor size to 2.5 mm²/14 AWG	2-way	**262-402**	25
Operating tool, of insulating material, for inserting comb-style jumper bars	2-way	**209-132**	1
Aluminum carrier rail, 1000 mm long, 18 mm wide, 7 mm high		**210-154**	1
Plastic end stop, with WSB marker slot, for aluminum carrier rail (210-154), 6 mm wide		**209-122**	25
Mounting foot, for DIN-35 rail, snaps onto terminal blocks with snap-in mounting foot, 6.4 mm wide	gray	**209-120**	25
Mounting foot with screw, for DIN-35 rail, can be screwed on terminal blocks with mounting flange, 6.4 mm wide	gray	**209-123**	25
Mounting adapter, for DIN-35 rail, can be used as end plate, 6.5 mm wide	gray	**209-137**	25
Operating tool with a partially insulated shaft, type 2, (3.5 x 0.5) mm blade		**210-720**	1

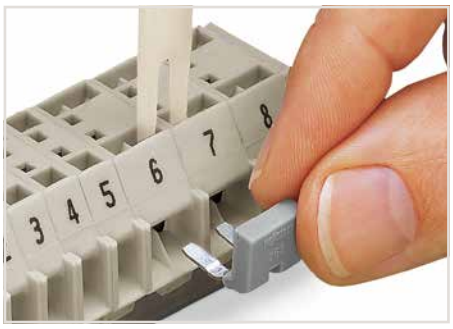

Commoning with comb-style jumper bar.

Ex Terminal Strips with Mounting Flanges or Snap-in Mounting Feet

4 mm², 262 Series

0.5 … 4 mm² ❶	20 … 12 AWG
550 V	300 V, 20 A
I_N 23 A	300 V, 20 A
Pole width 7 mm / 0.276 inch	
9 … 10 mm / 0.35 … 0.39 inch	

0.5 … 4 mm² ❶	20 … 12 AWG
550 V	300 V, 20 A
I_N 30 A	300 V, 20 A
Pole width 12 mm / 0.472 inch	
9 … 10 mm / 0.35 … 0.39 inch	



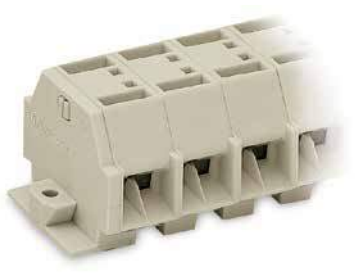

❶ Using crimped ferrules for corrosion protection, the rated cross section is reduced by one size. For conductor types and conductor preparation, see Section 14 "Electrical Equipment for Hazardous Environments."

❷ For custom lengths, please contact factory

Pole No.	Item No.	Pack. Unit
2-conductor Ex e II terminal strip, with mounting flanges, light gray		
2	**262-132**	100
3	**262-133**	100
4	**262-134**	100
5	**262-135**	100
6	**262-136**	100
7	**262-137**	50
8	**262-138**	50
9	**262-139**	50
10	**262-140**	25
11	**262-141**	25
12 ❷	**262-142**	25
2-conductor Ex e II terminal strip, with snap-in mounting feet, light gray		
2	**262-182**	100
3	**262-183**	100
4	**262-184**	100
5	**262-185**	100
6	**262-186**	50
7	**262-187**	50
8	**262-188**	50
9	**262-189**	50
10	**262-190**	25
11	**262-191**	25
12 ❷	**262-192**	25

Pole No.	Item No.	Pack. Unit
4-conductor Ex e II terminal strip, with mounting flanges, light gray		
2	**262-232**	100
3	**262-233**	100
4	**262-234**	100
5	**262-235**	100
6	**262-236**	50
7	**262-237**	50
8	**262-238**	50
9	**262-239**	50
10	**262-240**	25
11	**262-241**	25
12 ❷	**262-242**	25
4-conductor Ex e II terminal strip, with snap-in mounting feet, light gray		
2	**262-282**	100
3	**262-283**	100
4	**262-284**	100
5	**262-285**	100
6	**262-286**	50
7	**262-287**	50
8	**262-288**	50
9	**262-289**	50
10	**262-290**	25
11	**262-291**	25
12 ❷	**262-292**	25

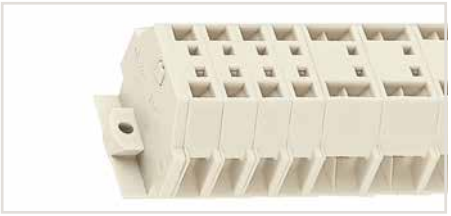

Terminal strip, with mounting flanges, for screw or similar mounting types, 3.2 mm mounting hole diameter (with 209-123 Mounting Foot for DIN-35 rail)



Terminal strip with snap-in mounting feet, for 0.6 … 1.2 mm plate thickness, 3.5 mm mounting hole diameter (also for 210-154 Aluminum Rail or with 209-120 Mounting Foot for DIN-35 rail)

Modular terminal blocks and terminal strips with mounting flanges

L = pole no. x pole width L_1 = L + 8.1 mm L_2 = L + 14.5 mm

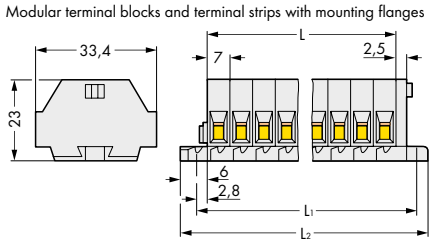

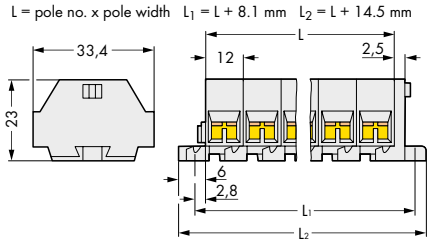

Modular terminal blocks and terminal strips with snap-in mounting feet

L = (pole no. x pole width) + 4.4 mm ● End terminal block

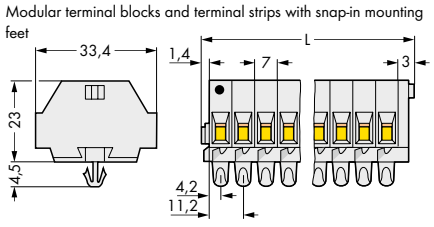

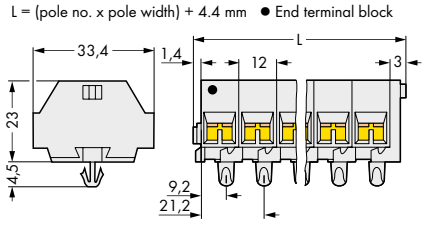

Dimensions in mm

Test Plug Modules for Terminal Strips without Push-Button

260, 261 and 262 Series

Suitable for 260 Series	Suitable for 261 Series (also 264 Series)	Suitable for 262 Series
Test voltage 250 V/500 V ❶	Test voltage 400 V/800 V ❶	Test voltage 500 V/800 V ❶
Test current 0.5 A/6 A ❷	Test current 0.5 A/6 A ❷	Test current 0.5 A/6 A ❷
Average contact pressure 2.2 N per pin	Average contact pressure 2.2 N per pin	Average contact pressure 2.2 N per pin

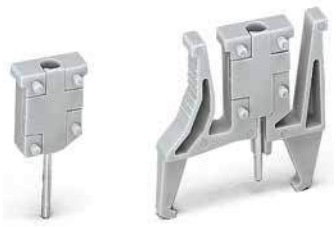





	Item No.	Pack. Unit		Item No.	Pack. Unit		Item No.	Pack. Unit
Test plug module, without locking latches, snaps together, module width 5 mm, for 2-conductor terminal blocks			Test plug module, without locking latches, snaps together, module width 6 mm, for 2-conductor terminal blocks			Test plug module, without locking latches, snaps together, module width 7 mm, for 2-conductor terminal blocks		
◯ gray	**249-135**	100 (4x25)	◯ gray	**249-136**	100 (4x25)	◯ gray	**249-137**	100 (4x25)
Test plug module, without locking latches, snaps together, module width 8 mm, for 4-conductor terminal blocks			Test plug module, without locking latches, snaps together, module width 10 mm, for 4-conductor terminal blocks			Test plug module, without locking latches, snaps together, module width 12 mm, for 4-conductor terminal blocks		
◯ gray	**249-138**	100 (4x25)	◯ gray	**249-139**	100 (4x25)	◯ gray	**249-140**	100 (4x25)
Test plug module, with locking latches, snaps together, module width 5 mm, for 2-conductor terminal blocks			Test plug module, with locking latches, snaps together, module width 6 mm, for 2-conductor terminal blocks					
◯ gray	**260-404**	100 (4x25)	◯ gray	**261-404**	100 (4x25)			
Test plug module, with locking latches, snaps together, module width 8 mm, for 4-conductor terminal blocks			Test plug module, with locking latches, snaps together, module width 10 mm, for 4-conductor terminal blocks					
◯ gray	**260-405**	100 (4x25)	◯ gray	**261-405**	100 (4x25)			

Accessories for Test Plug Modules

Test plug, with 500 mm cable, 2 mm Ø, max. 42 V			
	red	**210-136**	50
Test plug, with 500 mm cable, 2.3 mm Ø, max. 42 V			
	yellow	**210-137**	50

Insulation Stops for 869 Series Terminal Strips

Handling

Insulation stop
suitable for all rail-mount terminal blocks featuring:

Terminal block width 5 mm / 0.197 inch



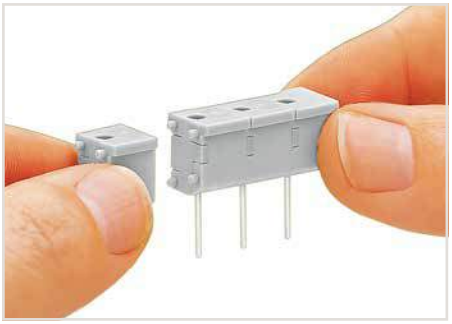

Snapping individual modules together to assemble a multipole test plug module.

❷ Maximum test voltage (touch contact): 48 V (test pins are not touch-proof)

❸ Maximum test current (touch contact): 0.5 A
Maximum test current: 6 A (if the test pins are securely connected in the clamping units)

	Item No.	Pack. Unit
Insulation stop, 5 pcs/strip, 0.08 ... 0.2 mm² "s" (0.14 mm² "f-st")		
○ white	**280-470**	200 (8x25)
Insulation stop, 5 pcs/strip, 0.25 ... 0.5 mm²		
○ light gray	**280-471**	200 (8x25)
Insulation stop, 5 pcs/strip, 0.75 ... 1 mm²		
● dark gray	**280-472**	200 (8x25)

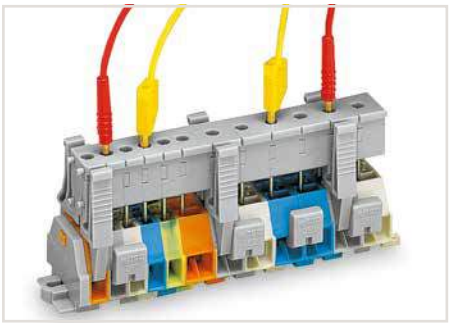

Testing via test plug modules snapped onto a terminal strip – wired or unwired. As touch contact is made with the CAGE CLAMP® (spring steel) unit, this testing type is limited to maximum 0.5 A.

Distance between locking devices must be approximately 35 ... 40 mm.



Testing after the conductors have been terminated.

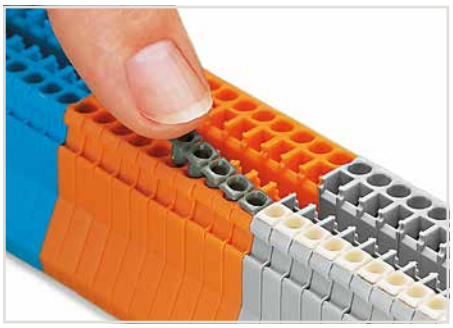

Inserting an insulation stop into conductor entry holes of terminal strip.

Wiring programmable logic controllers and microprocessor-operated control circuits often relies on very small cross sections of fine-stranded conductors. These small conductors are highly flexible, and they deform when pushed against the conductor stop in terminal blocks. As a result, the conductor insulation – not the copper conductor – may be clamped, causing intermittent contact or no contact at all. Common to all terminal block types currently offered, this problem creates unnecessary downtime for troubleshooting.

The solution: an insulation stop for compact terminal blocks. Insulation stops automatically bundle the cores of fine-stranded conductors when inserted into the clamping unit, preventing splaying. This also limits the conductor entry to a defined cross sectional area – ensuring the actual conductor, not the insulation, will enter the clamping unit.

The insulation stop is available as dividable 5-pole strip for the 869 Series terminal strips.

Insulation stop usage will not affect the conductor strip lengths for the aforementioned terminal strips.



Chassis-Mount Terminal Strips
Field-Wiring Terminal Blocks

Chassis-Mount Terminal Strips and Field-Wiring Terminal Blocks

Side-Entry Wiring

			Page
	**4-Conductor Chassis-Mount Terminal Strips** 0.5 … 4 mm² (20 … 12 AWG)	862 Series	462
	**Field-Wiring Terminal Blocks** 0.5 … 2.5 mm² (18 … 12 AWG)	294 Series	473
	**Field-Wiring Terminal Blocks** 0.5 … 2.5 mm² (18 … 14 AWG)	293 Series	484

4-Conductor Chassis-Mount Terminal Strips, 862 Series

Description and Installation

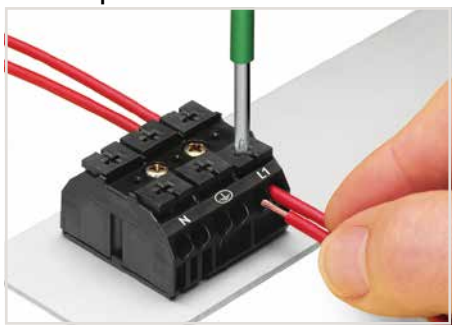

Terminating four conductors per pole – solid and fine-stranded.



Inserting a conductor via push-button.



Testing with a 2 mm Ø test plug.


Makes an automatic contact to the mounting plate. The plate's varnish is instantly penetrated.

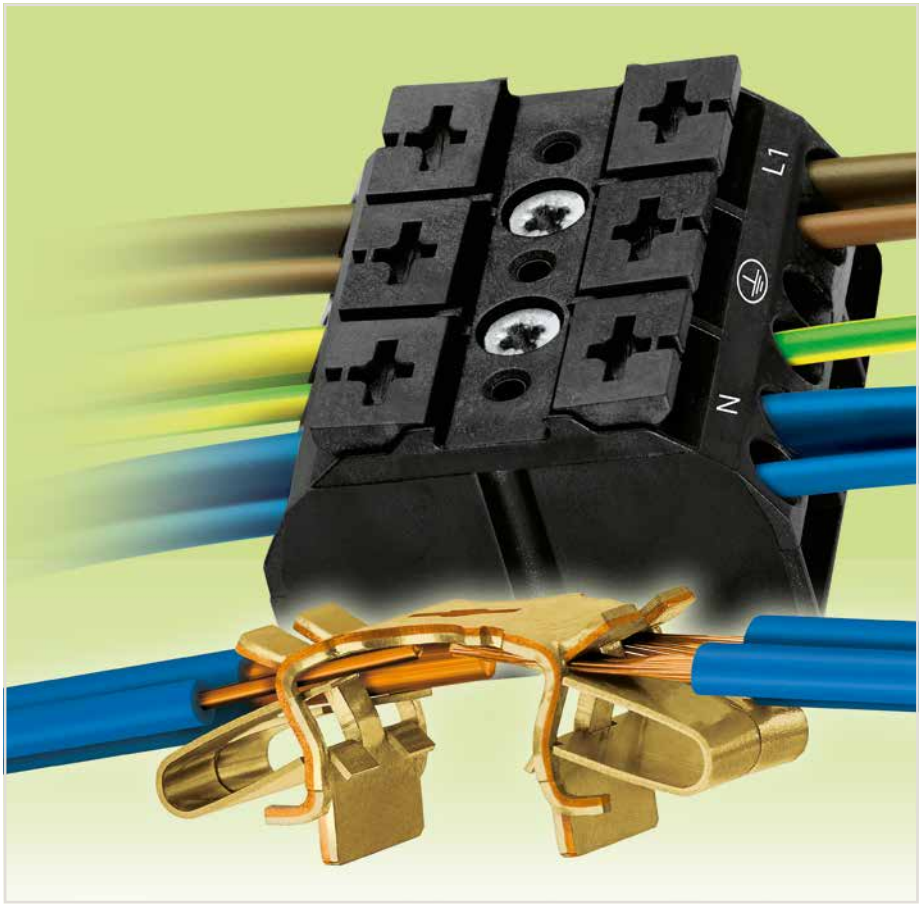



Commoning using a comb-style jumper bar (862-482).

9

Cost-effective features:
WAGO's 862 Series Chassis-Mount Terminal Strips were developed specifically to minimize wiring costs, while accommodating requirements for flexible mounting, multiple connection points and easy handling:

- Equipped with Push-in CAGE CLAMP®, the 862 Series connects up to four conductors sized 0.5 … 4 mm² (20 … 12 AWG). Due to multiple connection points per pole, different conductor sizes can be used within the same terminal block position.
- For factory wiring, Push-in CAGE CLAMP® Connection Technology allows solid conductors, fine-stranded conductors with ferrules or ultrasonically bonded conductors from 0.5 … 4 mm² (20 … 12 AWG) to be terminated by simply pushing them into unit (length of bonded conductor end: min. 10 mm).
- Convenient automatic grounding contact optional
- Snap-in mounting feet for fast assembly
- Push-buttons for easy installation with an operating tool or by hand
- Built-in test points simplify testing with 2 mm Ø test plug.
- Flexible marking options with standard marking (pre-marked), marking strip or custom marked for large orders

Push-in CAGE CLAMP® terminates the following copper conductors:					
solid	stranded	fine-stranded, also with tinned single strands	fine-stranded, tip-bonded	fine-stranded, with ferrule (gastight crimped)	fine-stranded, with pin terminal (gastight crimped)

For aluminum conductors, see notes in Section 14. When using ferrules, the max. conductor cross section accommodated is one size smaller than max. rating of terminal block.

Mounting Types

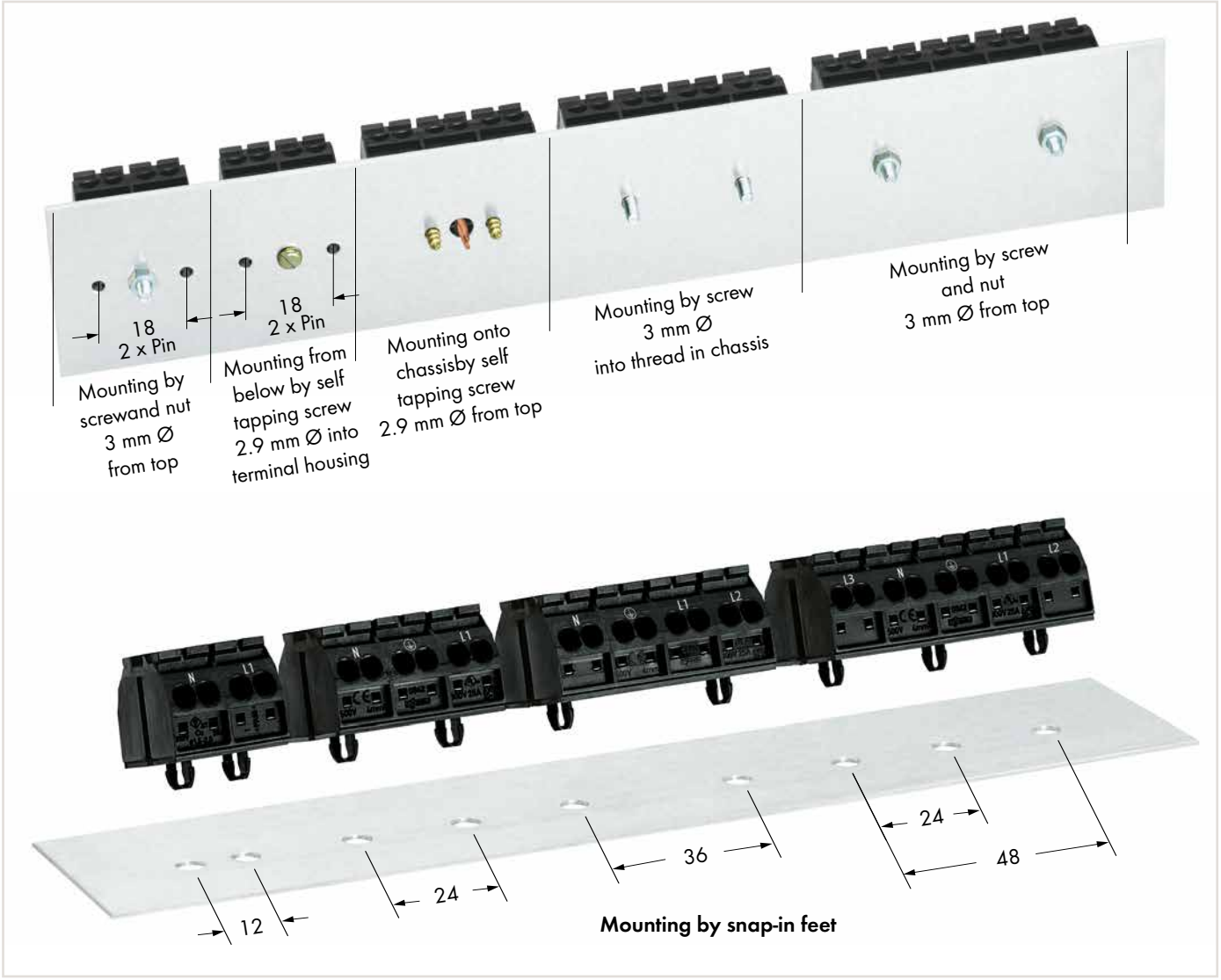

Dimensions in mm

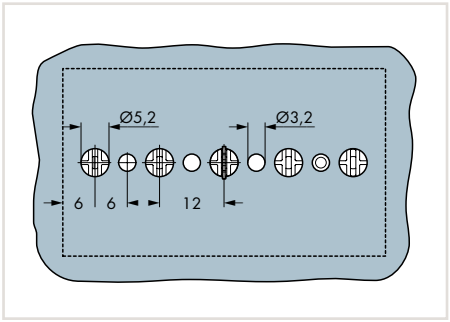

Dimensions (in mm) for ground contact and snap-in mounting foot (5.2 mm Ø)

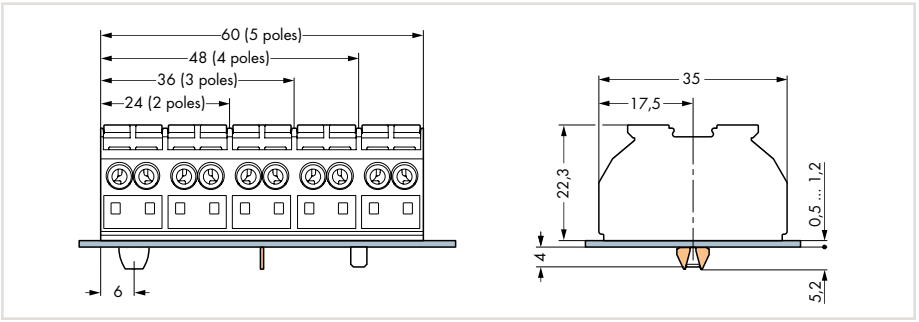

Dimensions (in mm) for chassis-mount terminal strips

4-Conductor Chassis-Mount Terminal Strips, 2-Pole

4 mm², 862 Series

0.5 … 4 mm²	20 … 12 AWG
500 V/6 kV/3 ❶	300 V, 20 A
I_N 32 A	300 V, 20 A
10 … 11 mm / 0.39 … 0.43 inch	

0.5 … 4 mm²	20 … 12 AWG
500 V/6 kV/3 ❶	300 V, 20 A
I_N 32 A	300 V, 20 A
10 … 11 mm / 0.39 … 0.43 inch	





❶ 500 V = rated voltage
6 kV = rated surge voltage
3 = pollution degree
(see Section 14)

❸ Suitable for Ex e II applications
440 V, 28 A
(see Section 14)

	Item No.	Pack. Unit
4-conductor chassis-mount terminal strip, for mounting via screw and nut (3 mm Ø) or for self-tapping screw (2.9 mm Ø) from top, with 2 x pin, 2-pole, black		
● N-L1	**862-2552**	500
● L1-N	**862-1552**	500
● L1-N Ex	**862-1552/999-950** ❷	500
● plain	**862-552**	500
4-conductor chassis-mount terminal strip, for self-tapping screw (2.9 mm Ø) from below, with 2 x pin, 2-pole, black		
● N-L1	**862-2562**	500
● L1-N	**862-1562**	500
● L1-N Ex	**862-1562/999-950** ❷	500
● plain	**862-562**	500
4-conductor chassis-mount terminal strip, one snap-in foot per pole, 2-pole, black		
● N-L1	**862-2532**	500
● L1-N	**862-1532**	500
● L1-N Ex	**862-1532/999-950** ❷	500
● plain	**862-532**	500

	Item No.	Pack. Unit
4-conductor chassis-mount terminal strip, for mounting via screw and nut (3 mm Ø) or for self-tapping screw (2.9 mm Ø) from top, with 2 x pin, 2-pole, white		
○ N-L1	**862-2652**	500
○ L1-N	**862-1652**	500
○ L1-N Ex	**862-1652/999-950** ❷	500
○ plain	**862-652**	500
4-conductor chassis-mount terminal strip, for self-tapping screw (2.9 mm Ø) from below, with 2 x pin, 2-pole, white		
○ N-L1	**862-2662**	500
○ L1-N	**862-1662**	500
○ L1-N Ex	**862-1662/999-950** ❷	500
○ plain	**862-662**	500
4-conductor chassis-mount terminal strip, one snap-in foot per pole, 2-pole, white		
○ N-L1	**862-2632**	500
○ L1-N	**862-1632**	500
○ L1-N Ex	**862-1632/999-950** ❷	500
○ plain	**862-632**	500

862 Series Accessories

Comb-style jumper bar, simply push into the conductor entry



I_N 32 A **862-482** 5

Test plug, with 500 mm cable, 2 mm Ø, max. 42 V



red **210-136** 50

Test plug, with 500 mm cable, 2.3 mm Ø, max. 42 V



yellow **210-137** 50

Marking strip, plain, 7.5 mm wide, 50 m reel



white **709-178** 1

Operating tool with a partially insulated shaft, type 2, (3.5 x 0.5) mm blade



210-720 1

9

4-Conductor Chassis-Mount Terminal Strips, 3-Pole

4 mm², 862 Series

0.5 … 4 mm²	20 … 12 AWG
500 V/6 kV/3 ❶	300 V, 20 A
I_N 32 A	300 V, 20 A
10 … 11 mm / 0.39 … 0.43 inch	

0.5 … 4 mm²	20 … 12 AWG
500 V/6 kV/3 ❶	300 V, 20 A
I_N 32 A	300 V, 20 A
10 … 11 mm / 0.39 … 0.43 inch	





❶ 500 V = rated voltage
6 kV = rated surge voltage
3 = pollution degree
(see Section 14)

❷ Suitable for Ex e II applications
440 V, 28 A
(see Section 14)

	Item No.	Pack. Unit
4-conductor chassis-mount terminal strip, for mounting via screw and nut (3 mm Ø) or for self-tapping screw (2.9 mm Ø) from top, with 2 x pin, 3-pole, black		
● N-PE-L1, without PE contact	**862-2503**	250
● PE-N-L1, without PE contact	**862-1503**	250
● PE-N-L1 Ex, without PE contact	**862-1503/999-950** ❷	250
● plain, without PE contact	**862-503**	250
● N-PE-L1, with PE contact	**862-8503**	250
● PE-N-L1, with PE contact	**862-9503**	250
4-conductor chassis-mount terminal strip, one snap-in foot per pole, 3-pole, black		
● N-PE-L1, without PE contact	**862-2533**	250
● PE-N-L1, without PE contact	**862-1533**	250
● PE-N-L1 Ex, without PE contact	**862-1533/999-950** ❷	250
● plain, without PE contact	**862-533**	250
● N-PE-L1, with PE contact	**862-8533**	250
● PE-N-L1, with PE contact	**862-9533**	250
4-conductor chassis-mount terminal strip, one snap-in foot per pole at pos. 1+3, 3-pole, black		
● N-PE-L1, without PE contact	**862-2593**	250
● PE-N-L1, without PE contact	**862-1593**	250
● PE-N-L1 Ex, without PE contact	**862-1593/999-950** ❷	250
● plain, without PE contact	**862-593**	250
● N-PE-L1, with PE contact	**862-8593**	250
● PE-N-L1, with PE contact	**862-9593**	250

	Item No.	Pack. Unit
4-conductor chassis-mount terminal strip, for mounting via screw and nut (3 mm Ø) or for self-tapping screw (2.9 mm Ø) from top, with 2 x pin, 3-pole, white		
○ N-PE-L1, without PE contact	**862-2603**	250
○ PE-N-L1, without PE contact	**862-1603**	250
○ PE-N-L1 Ex, without PE contact	**862-1603/999-950** ❷	250
○ plain, without PE contact	**862-603**	250
○ N-PE-L1, with PE contact	**862-8603**	250
○ PE-N-L1, with PE contact	**862-9603**	250
4-conductor chassis-mount terminal strip, one snap-in foot per pole, 3-pole, white		
○ N-PE-L1, without PE contact	**862-2633**	250
○ PE-N-L1, without PE contact	**862-1633**	250
○ PE-N-L1 Ex, without PE contact	**862-1633/999-950** ❷	250
○ plain, without PE contact	**862-633**	250
○ N-PE-L1, with PE contact	**862-8633**	250
○ PE-N-L1, with PE contact	**862-9633**	250
4-conductor chassis-mount terminal strip, one snap-in foot per pole at pos. 1+3, 3-pole, white		
○ N-PE-L1, without PE contact	**862-2693**	250
○ PE-N-L1, without PE contact	**862-1693**	250
○ PE-N-L1 Ex, without PE contact	**862-1693/999-950** ❷	250
○ plain, without PE contact	**862-693**	250
○ N-PE-L1, with PE contact	**862-8693**	250
○ PE-N-L1, with PE contact	**862-9693**	250

862 Series Accessories

Comb-style jumper bar, simply push into the conductor entry



I_N 32 A	**862-482**	5

Test plug, with 500 mm cable, 2 mm Ø, max. 42 V



red	**210-136**	50

Test plug, with 500 mm cable, 2.3 mm Ø, max. 42 V



yellow	**210-137**	50

Marking strip, plain, 7.5 mm wide, 50 m reel



white	**709-178**	1

Operating tool with a partially insulated shaft, type 2, (3.5 x 0.5) mm blade



	210-720	1

9

4-Conductor Chassis-Mount Terminal Strips, 4-Pole

4 mm², 862 Series

0.5 … 4 mm²	20 … 12 AWG
500 V/6 kV/3 ❶	300 V, 20 A
I_N 32 A	300 V, 20 A
10 … 11 mm / 0.39 … 0.43 inch	

0.5 … 4 mm²	20 … 12 AWG
500 V/6 kV/3 ❶	300 V, 20 A
I_N 32 A	300 V, 20 A
10 … 11 mm / 0.39 … 0.43 inch	





❶ 500 V = rated voltage
6 kV = rated surge voltage
3 = pollution degree
(see Section 14)

❷ Suitable for Ex e II applications
440 V, 28 A
(see Section 14)

	Item No.	Pack. Unit
4-conductor chassis-mount terminal strip, for mounting via screw and nut (3 mm Ø) or for self-tapping screw (2.9 mm Ø) from top, with 2 x pin, 4-pole, black		
● N-PE-L1-L2, without PE contact	**862-2504**	200
● PE-N-L1-L2, without PE contact	**862-1504**	200
● PE-N-L1-L2 Ex, without PE contact	**862-1504/999-950** ❷	200
● plain, without PE contact	**862-504**	200
● N-PE-L1-L2, with PE contact	**862-8504**	200
● PE-N-L1-L2, with PE contact	**862-9504**	200
4-conductor chassis-mount terminal strip, one snap-in foot per pole, 4-pole, black		
● N-PE-L1-L2, without PE contact	**862-2534**	200
● PE-N-L1-L2, without PE contact	**862-1534**	200
● PE-N-L1-L2 Ex, without PE contact	**862-1534/999-950** ❷	200
● plain, without PE contact	**862-534**	200
● N-PE-L1-L2, with PE contact	**862-8534**	200
● PE-N-L1-L2, with PE contact	**862-9534**	200
4-conductor chassis-mount terminal strip, one snap-in foot per pole at pos. 1+4, 4-pole, black		
● N-PE-L1-L2, without PE contact	**862-2594**	200
● PE-N-L1-L2, without PE contact	**862-1594**	200
● PE-N-L1-L2 Ex, without PE contact	**862-1594/999-950** ❷	200
● plain, without PE contact	**862-594**	200
● N-PE-L1-L2, with PE contact	**862-8594**	200
● PE-N-L1-L2, with PE contact	**862-9594**	200

	Item No.	Pack. Unit
4-conductor chassis-mount terminal strip, for mounting via screw and nut (3 mm Ø) or for self-tapping screw (2.9 mm Ø) from top, with 2 x pin, 4-pole, white		
○ N-PE-L1-L2, without PE contact	**862-2604**	200
○ PE-N-L1-L2, without PE contact	**862-1604**	200
○ PE-N-L1-L2 Ex, without PE contact	**862-1604/999-950** ❷	200
○ plain, without PE contact	**862-604**	200
○ N-PE-L1-L2, with PE contact	**862-8604**	200
○ PE-N-L1-L2, with PE contact	**862-9604**	200
4-conductor chassis-mount terminal strip, one snap-in foot per pole, 4-pole, white		
○ N-PE-L1-L2, without PE contact	**862-2634**	200
○ PE-N-L1-L2, without PE contact	**862-1634**	200
○ PE-N-L1-L2 Ex, without PE contact	**862-1634/999-950** ❷	200
○ plain, without PE contact	**862-634**	200
○ N-PE-L1-L2, with PE contact	**862-8634**	200
○ PE-N-L1-L2, with PE contact	**862-9634**	200
4-conductor chassis-mount terminal strip, one snap-in foot per pole at pos. 1+4, 4-pole, white		
○ N-PE-L1-L2, without PE contact	**862-2694**	200
○ PE-N-L1-L2, without PE contact	**862-1694**	200
○ PE-N-L1-L2 Ex, without PE contact	**862-1694/999-950** ❷	200
○ plain, without PE contact	**862-694**	200
○ N-PE-L1-L2, with PE contact	**862-8694**	200
○ PE-N-L1-L2, with PE contact	**862-9694**	200

862 Series Accessories

Comb-style jumper bar, simply push into the conductor entry



I_N 32 A **862-482** 5

Test plug, with 500 mm cable, 2 mm Ø, max. 42 V



red **210-136** 50

Test plug, with 500 mm cable, 2.3 mm Ø, max. 42 V



yellow **210-137** 50

Marking strip, plain, 7.5 mm wide, 50 m reel



white **709-178** 1

Operating tool with a partially insulated shaft, type 2, (3.5 x 0.5) mm blade



210-720 1

9

Overview of certification organizations, see page 654

4-Conductor Chassis-Mount Terminal Strips, 3-Pole

4 mm², 862 Series

0.5 … 4 mm²	20 … 12 AWG
500 V/6 kV/3 ❶	300 V, 20 A
I_N 32 A	300 V, 20 A
10 … 11 mm / 0.39 … 0.43 inch	

0.5 … 4 mm²	20 … 12 AWG
500 V/6 kV/3 ❶	300 V, 20 A
I_N 32 A	300 V, 20 A
10 … 11 mm / 0.39 … 0.43 inch	





❶ 500 V = rated voltage
6 kV = rated surge voltage
3 = pollution degree
(see Section 14)

❷ Suitable for Ex e II applications
440 V, 28 A
(see Section 14)

	Item No.	Pack. Unit
4-conductor chassis-mount terminal strip, for mounting via screw and nut (3 mm Ø) or for self-tapping screw (2.9 mm Ø) from top, with 2 x pin, 5-pole, black		
● L3-N-PE-L1-L2, without PE contact	**862-2505**	200
● PE-N-L1-L2-L3, without PE contact	**862-1505**	200
● PE-N-L1-L2-L3 Ex, without PE contact	**862-1505/999-950** ❷	200
● plain, without PE contact	**862-505**	200
● L3-N-PE-L1-L2, with PE contact	**862-8505**	200
● PE-N-L1-L2-L3, with PE contact	**862-9505**	200
4-conductor chassis-mount terminal strip, one snap-in foot per pole at pos. 2+4, 5-pole, black		
● L3-N-PE-L1-L2, without PE contact	**862-2525**	200
● PE-N-L1-L2-L3, without PE contact	**862-1525**	200
● PE-N-L1-L2-L3 Ex, without PE contact	**862-1525/999-950** ❷	200
● plain, without PE contact	**862-525**	200
● L3-N-PE-L1-L2, with PE contact	**862-8525**	200
● PE-N-L1-L2-L3, with PE contact	**862-9525**	200
4-conductor chassis-mount terminal strip, one snap-in foot per pole at pos. 1+3+5, 5-pole, black		
● L3-N-PE-L1-L2, without PE contact	**862-2515**	200
● PE-N-L1-L2-L3, without PE contact	**862-1515**	200
● PE-N-L1-L2-L3 Ex, without PE contact	**862-1515/999-950** ❷	200
● plain, without PE contact	**862-515**	200
● L3-N-PE-L1-L2, with PE contact	**862-8515**	200
● PE-N-L1-L2-L3, with PE contact	**862-9515**	200

	Item No.	Pack. Unit
4-conductor chassis-mount terminal strip, for mounting via screw and nut (3 mm Ø) or for self-tapping screw (2.9 mm Ø) from top, with 2 x pin, 5-pole, white		
○ L3-N-PE-L1-L2, without PE contact	**862-2605**	200
○ PE-N-L1-L2-L3, without PE contact	**862-1605**	200
○ PE-N-L1-L2-L3 Ex, without PE contact	**862-1605/999-950** ❷	200
○ plain, without PE contact	**862-605**	200
○ L3-N-PE-L1-L2, with PE contact	**862-8605**	200
○ PE-N-L1-L2-L3, with PE contact	**862-9605**	200
4-conductor chassis-mount terminal strip, one snap-in foot per pole at pos. 2+4, 5-pole, white		
○ L3-N-PE-L1-L2, without PE contact	**862-2625**	200
○ PE-N-L1-L2-L3, without PE contact	**862-1625**	200
○ PE-N-L1-L2-L3 Ex, without PE contact	**862-1625/999-950** ❷	200
○ plain, without PE contact	**862-625**	200
○ L3-N-PE-L1-L2, with PE contact	**862-8625**	200
○ PE-N-L1-L2-L3, with PE contact	**862-9625**	200
4-conductor chassis-mount terminal strip, one snap-in foot per pole at pos. 1+3+5, 5-pole, white		
○ L3-N-PE-L1-L2, without PE contact	**862-2615**	200
○ PE-N-L1-L2-L3, without PE contact	**862-1615**	200
○ PE-N-L1-L2-L3 Ex, without PE contact	**862-1615/999-950** ❷	200
○ plain, without PE contact	**862-615**	200
○ L3-N-PE-L1-L2, with PE contact	**862-8615**	200
○ PE-N-L1-L2-L3, with PE contact	**862-9615**	200

862 Series Accessories

Comb-style jumper bar, simply push into the conductor entry



I_N 32 A	**862-482**	5

Test plug, with 500 mm cable, 2 mm Ø, max. 42 V



red	**210-136**	50

Test plug, with 500 mm cable, 2.3 mm Ø, max. 42 V



yellow	**210-137**	50

Marking strip, plain, 7.5 mm wide, 50 m reel



white	**709-178**	1

Operating tool with a partially insulated shaft, type 2, (3.5 x 0.5) mm blade



	210-720	1

9

Crimping Tools

Variocrimp 4 crimping tool
for insulated and uninsulated ferrules
0.25 … 4 mm²/AWG 24 … 12



Item No.	Pack. Unit
"Variocrimp 4" crimping tool, for insulated and uninsulated ferrules, 0.25 … 4 mm²/24 … 12 AWG	
206-204	1



Insert the ferruled conductor into the crimping station.



Squeeze handles until ratchet mechanism is released.

Application notes:
- With "Variocrimp 4," the built-in crimping pressure control automatically adjusts force to the conductor cross section used.
- Only one crimping station is needed to handle the specified conductor size range.
- Uniform compact crimping from all four sides for high conductor retention.
- No need to center the conductor into the ferrule.
- Conductor and ferrule insertion possible from both sides (for left- and right-handers).
- Built-in ratchet mechanism ensures gastight crimp connection.
- Crimping tools open automatically after crimping operation is complete.
- Comfortable handles for operator.

Insulated and Uninsulated Ferrules per DIN 46228, Part 4/09.90



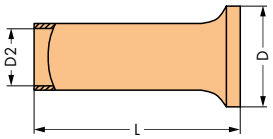

Ferrule, insulated, electro-tin-plated, electrolytic copper, gastight crimped, per DIN 46288, Part 4/09.09						
Conductor Size	Strip length	L	D	D 2	**Item No.**	Pack. Unit
0.5 mm² / 22 AWG	10 mm / 0.39 inch	10	2,1	1	**216-141**	5000 (1000)
0.75 mm² / 20 AWG	10 mm / 0.39 inch	10	2,3	1,2	**216-142**	5000 (1000)
1 mm² / 18 AWG	10 mm / 0.39 inch	10	2,5	1,4	**216-143**	5000 (1000)
1.5 mm² / 16 AWG	10 mm / 0.39 inch	10	2,8	1,7	**216-144**	5000 (1000)



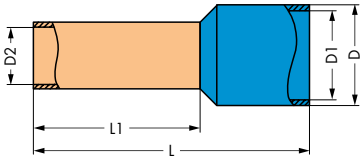

Ferrule, insulated, electro-tin-plated, electrolytic copper, gastight crimped, per DIN 46288, Part 4/09.09									
Conductor Size	Color	Strip length	L	L 1	D	D 1	D 2	**Item No.**	Pack. Unit
0.5 mm² / 22 AWG	white	12 mm / 0.47 inch	16	10	3,1	2,6	1	**216-241**	1000
0.75 mm² / 20 AWG	gray	12 mm / 0.47 inch	16	10	3,3	2,8	1,2	**216-242**	1000
1 mm² / 18 AWG	red	12 mm / 0.47 inch	16	10	3,5	3	1,4	**216-243**	1000
1.5 mm² / 16 AWG	black	12 mm / 0.47 inch	16	10	4	3,5	1,7	**216-244**	1000

For Connecting Lighting and Equipment Worldwide
Contact Technology
294 Series

Contact Technology

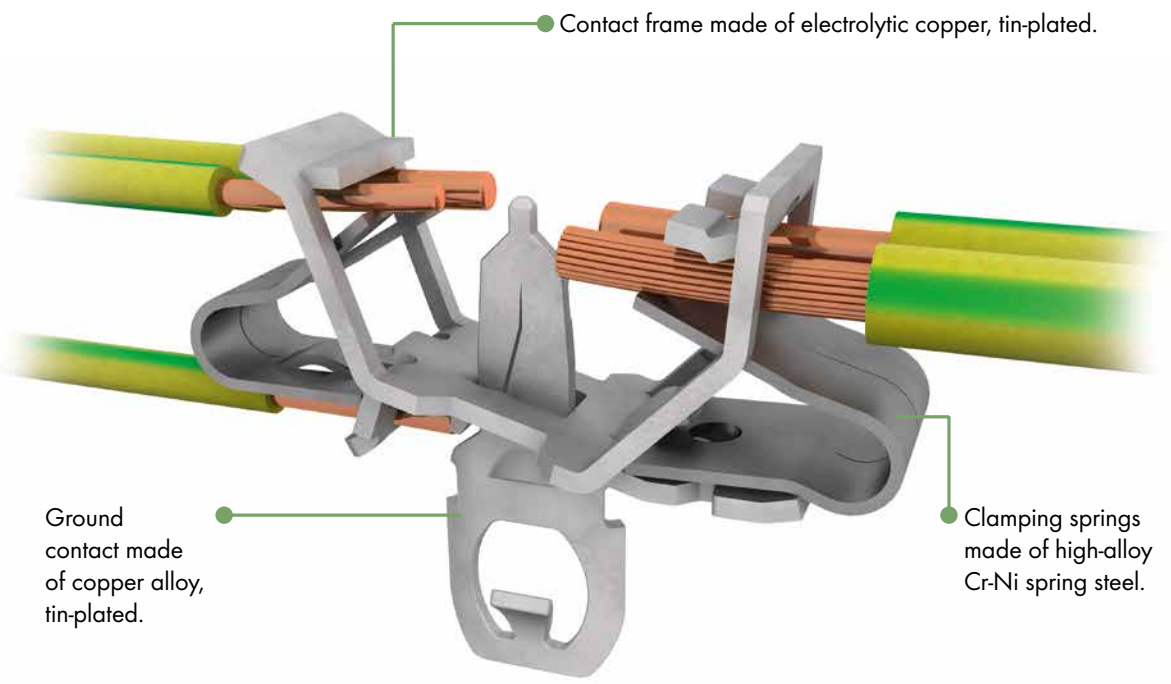

EUROPE
1 x 0.5 … 2.5 mm² “s”
1 x 0.5 … 1.5 mm² “s”
1 x 0.5 … 0.75 mm² “s”
AMERICA
1 x AWG 18 … 14 “s”
1 x AWG 18 … 16 “s”
1 x AWG 18 “s”
JAPAN
1 x 0.8 … 1.6 mm diam. “s”
1 x 0.8 … 1 mm diam. “s”
1 x 0.8 mm diam. “s”

Internal connection:
PUSH WIRE® for internal wiring with solid conductors

EUROPE
2 x 0.5 … 2.5 mm² “s, str, f-str”
AMERICA
2 x AWG 18 … 12 “s”
2 x AWG 18 … 14 “s, f-str”
JAPAN
2 x 0.8 … 2 mm diam. “s”
2 x 0.5 … 2 mm² “str, f-str”

External connection:
Push-in CAGE CLAMP® for field-wiring with all conductor types

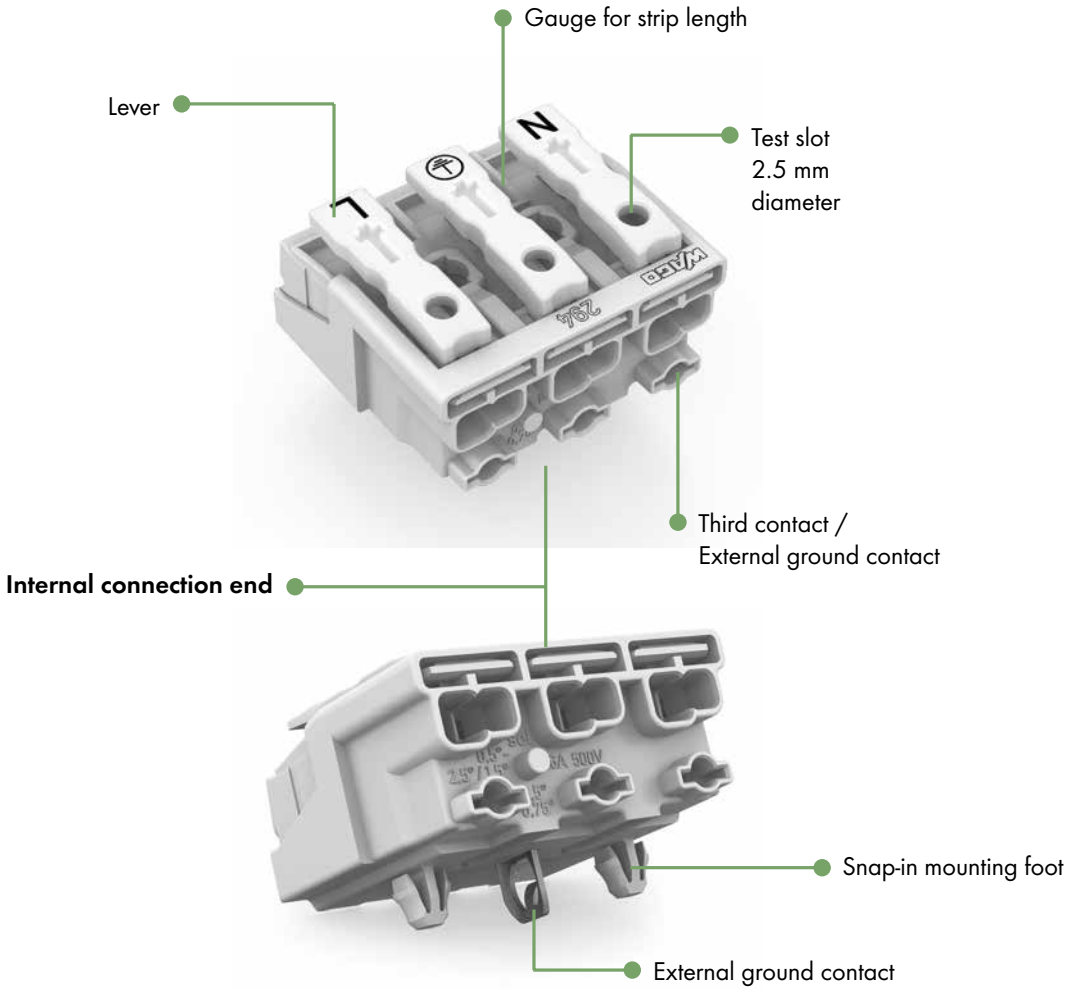
Gauge for strip length
Lever
Test slot
2.5 mm
diameter
Third contact /
External ground contact
Internal connection end
Snap-in mounting foot
External ground contact

Field-Wiring Terminal Blocks With Two Snap-In Mounting Feet

294 Series

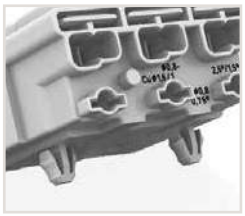

Without Ground Contact	With Direct Ground Contact	With Screw-Type Ground Contact	With Snap-In Ground Contact	With Angled Snap-In Ground Contact
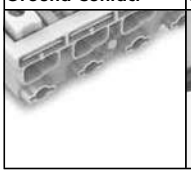	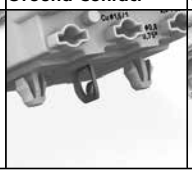			

Pole No.	Marking	Item No.	Item No.	Item No.	Item No.	Item No.
2 	without	294-5002	– – –	– – –	– – –	– – –
	N L	294-5012	– – –	– – –	– – –	– – –
	N' L'	294-5022	– – –	– – –	– – –	– – –
	DA– DA+	294-5032	– – –	– – –	– – –	– – –
	– +	294-5072	– – –	– – –	– – –	– – –
	1 N	294-5052	– – –	– – –	– – –	– – –
	2 1	294-5042	– – –	– – –	– – –	– – –
3 	without	294-5003	– – –	– – –	– – –	– – –
	N ⏚ L	294-5013	294-5113	294-5413	294-5213	294-5313
	N' ⏚ L'	294-5023	294-5123	294-5423	294-5223	294-5323
	1 ⏚ N	294-5053	294-5153	294-5453	294-5253	294-5353
	3 2 1	294-5043	– – –	– – –	– – –	– – –
4 	without	294-5004	– – –	– – –	– – –	– – –
	1/L' 2/L ⏚ N	294-5024	294-5124	294-5424	294-5224	294-5324
	1 2 ⏚ N	294-5014	294-5114	294-5414	294-5214	294-5314
	4 3 2 1	294-5044	– – –	– – –	– – –	– – –
	1/L' 2/L E N	294-5094/4025-000				
5 	without	294-5005	– – –	– – –	– – –	– – –
	L3 L2 L1 ⏚ N	294-5015	– – –	294-5415	294-5215	294-5315
	L' N' L ⏚ N	294-5025	– – –	294-5425	294-5225	294-5325
	DA+ DA– L ⏚ N	294-5035	– – –	294-5435	294-5235	294-5335
	DA– N ⏚ L DA+	294-5075	294-5175	294-5475	294-5275	294-5375
	3 N ⏚ 1 2	294-5055	294-5155	294-5455	294-5255	294-5355
	5 4 3 2 1	294-5045	– – –	– – –	– – –	– – –
	DA+ DA– L 3 N	294-5095/5025-000				
	L3 L2 L1 E N	294-5095/5026-000				
	L' N' L E N	294-5095/5027-000				

Field-Wiring Terminal Blocks Without Snap-In Mounting Feet

294 Series

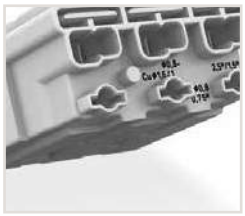

Without Ground Contact	With Direct Ground Contact	With Screw-Type Ground Contact	With Snap-In Ground Contact	With Angled Snap-In Ground Contact
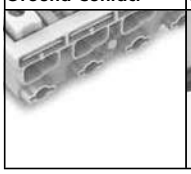	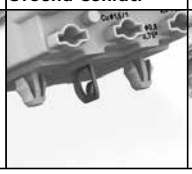			

Pole No.	Marking	Item No.	Item No.	Item No.	Item No.	Item No.
2 	without	294-4002	– – –	– – –	– – –	– – –
	N L	294-4012	– – –	– – –	– – –	– – –
	N' L'	294-4022	– – –	– – –	– – –	– – –
	DA– DA+	294-4032	– – –	– – –	– – –	– – –
	– +	294-4072	– – –	– – –	– – –	– – –
	1 N	294-4052	– – –	– – –	– – –	– – –
	2 1	294-4042	– – –	– – –	– – –	– – –
3 	without	294-4003	– – –	– – –	– – –	– – –
	N ⏚ L	294-4013	– – –	294-4413	294-4213	294-4313
	N' ⏚ L'	294-4023	– – –	294-4423	294-4223	294-4323
	1 ⏚ N	294-4053	– – –	294-4453	294-4253	294-4353
	3 2 1	294-4043	– – –	– – –	– – –	– – –
	N E L	294-4093/3025-000				
4 	without	294-4004	– – –	– – –	– – –	– – –
	1/L' 2/L ⏚ N	294-4024	– – –	294-4424	294-4224	294-4324
	1 2 ⏚ N	294-4014	– – –	294-4414	294-4214	294-4314
	4 3 2 1	294-4044	– – –	– – –	– – –	– – –
	1/L' 2/L E N	294-4094/4025-000				
5 	without	294-4005	– – –	– – –	– – –	– – –
	L3 L2 L1 ⏚ N	294-4015	– – –	294-4415	294-4215	294-4315
	L' N' L ⏚ N	294-4025	– – –	294-4425	294-4225	294-4325
	DA+ DA– L ⏚ N	294-4035	– – –	294-4435	294-4235	294-4335
	DA– N ⏚ L DA+	294-4075	– – –	294-4475	294-4275	294-4375
	3 N ⏚ 1 2	294-4055	– – –	294-4455	294-4255	294-4355
	5 4 3 2 1	294-4045	– – –	– – –	– – –	– – –
	DA+ DA– L E N	294-4095/5025-000				
	L3 L2 L1 E N	294-4095/5026-000				
	L' N' L E N	294-4095/5027-000				
6 	without	294-4006	– – –	– – –	– – –	– – –
7 	without	294-4007	– – –	– – –	– – –	– – –

9

Field-Wiring Terminal Blocks

2.5 mm², 294 Series



Terminating five conductors per pole – solid and fine-stranded.

- External connection of solid, stranded and fine-stranded conductors
- Universal conductor termination (AWG, metric)
- Third contact located at the bottom of internal terminal block end
- Strain relief plate can be retrofitted

Technical data:

Rating per	IEC/EN 60998-1	IEC/EN 60998-2-2	
Overvoltage category	II	II	
Pollution degree	2	2	
Rated voltage	500 V	500 V	
Rated surge voltage	4 kV	4 kV	
Nominal current	24 A	24 A	
Temperature rating	T 85	T 85	

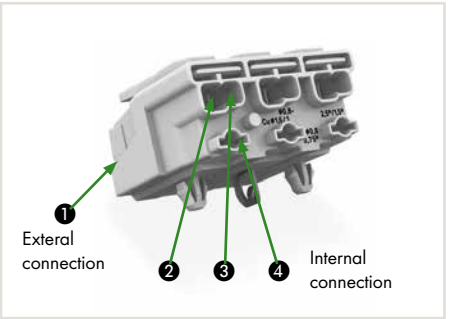

Conductor data (external connection):

Connection technology ❶	Push-in CAGE CLAMP®
Conductor size: solid, stranded or fine-stranded	2 x 0.5 … 2.5 mm²
Conductor size: with ferrule	2 x 0.5 … 1.5 mm²
AWG: solid	2 x 18 … 12
AWG: fine-stranded and stranded	2 x 18 … 14
Strip length	8 … 9 mm / 0.31 … 0.35 inch

Conductor data (internal connection):

Connection technology	PUSH WIRE®	
Conductor entry ❷		
Conductor size: solid	0.5 … 2.5 mm²	
Conductor size: fine-stranded	0.5 … 1.5 mm²	(with uninsulated ferrule)
Conductor size: fine-stranded	0.5 … 1 mm²	(with insulated ferrule)
AWG: solid	18 … 14	
Strip length	8 … 9 mm / 0.31 … 0.35 inch	
Conductor entry ❸		
Conductor size: solid	0.5 … 1.5 mm²	
Conductor size: fine-stranded	0.5 … 1 mm²	(with uninsulated ferrule)
Conductor size: fine-stranded	0.5 … 0.75 mm²	(with insulated ferrule)
AWG: solid	18 … 16	
Strip length	8 … 9 mm / 0.31 … 0.35 inch	
Conductor entry ❹		
Conductor size: solid	0.5 … 0.75 mm²	
AWG: solid	18	
Strip length	8 … 9 mm / 0.31 … 0.35 inch	

Material data:

Material group	IIIa
Insulating material	Polycarbonate (PC)
Temperature stability	Relative temperature index (RTI) of 120 °C
Flammability rating per UL 94	V0
Clamping spring material	Chrome nickel spring steel (CrNi)
Contact material	Electrolytic copper (E_{Cu})
Contact plating	tin-plated
16 mm-high versions are available upon request.	

Field-Wiring Terminal Blocks, 2-Pole

2.5 mm², 294 Series

without ground contact



	Item No.	Pack. Unit
Field-wiring terminal block, without ground contact, with snap-in mounting feet, 2-pole, white		
◯ N-L	**294-5012**	1000
◯ N´-L´	**294-5022**	1000
◯ DA- DA+	**294-5032**	1000
◯ - +	**294-5072**	1000
◯ 2-1	**294-5042**	1000
◯ 1-N	**294-5052**	1000
◯ plain	**294-5002**	1000
Field-wiring terminal block, without ground contact, without snap-in mounting feet, 2-pole, white		
◯ N-L	**294-4012**	1000
◯ N´-L´	**294-4022**	1000
◯ DA- DA+	**294-4032**	1000
◯ - +	**294-4072**	1000
◯ 2-1	**294-4042**	1000
◯ 1-N	**294-4052**	1000
◯ plain	**294-4002**	1000

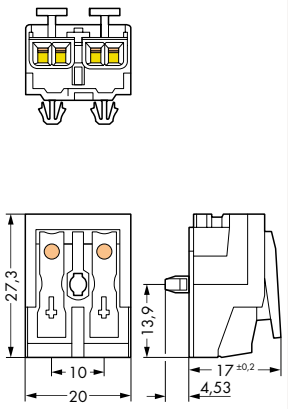

Dimensions in mm

Field-Wiring Terminal Blocks, 3-Pole

2.5 mm², 294 Series

without ground contact	with direct ground contact	with screw-type ground contact







	Item No.	Pack. Unit
Field-wiring terminal block, without ground contact, with snap-in mounting feet, 3-pole, white		
◯ N-PE-L	**294-5013**	500
◯ N´-PE-L´	**294-5023**	500
◯ 1-PE-N	**294-5053**	500
◯ 3-2-1	**294-5043**	500
◯ plain	**294-5003**	500
Field-wiring terminal block, without ground contact, without snap-in mounting feet, 3-pole, white		
◯ N-PE-L	**294-4013**	500
◯ N´-PE-L´	**294-4023**	500
◯ 1-PE-N	**294-4053**	500
◯ 3-2-1	**294-4043**	500
◯ plain	**294-4003**	500
◯ N-E-L	**294-4093/3025-000**	500

	Item No.	Pack. Unit
Field-wiring terminal block, with direct ground contact, with snap-in mounting feet, 3-pole, white		
◯ N-PE-L	**294-5113**	500
◯ N´-PE-L´	**294-5123**	500
◯ 1-PE-N	**294-5153**	500

	Item No.	Pack. Unit
Field-wiring terminal block, with screw-type ground contact, with snap-in mounting feet, 3-pole, white		
◯ N-PE-L	**294-5413**	500
◯ N´-PE-L´	**294-5423**	500
◯ 1-PE-N	**294-5453**	500
Field-wiring terminal block, with screw-type ground contact, without snap-in mounting feet, 3-pole, white		
◯ N-PE-L	**294-4413**	500
◯ N´-PE-L´	**294-4423**	500
◯ 1-PE-N	**294-4453**	500

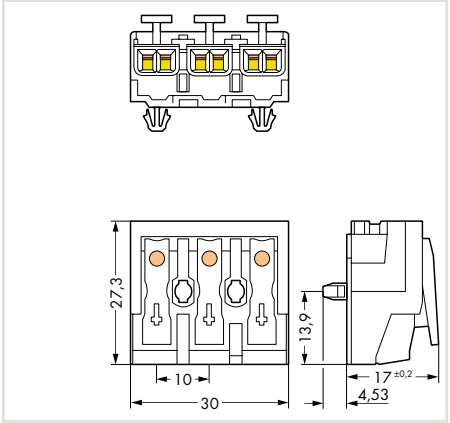

Dimensions in mm

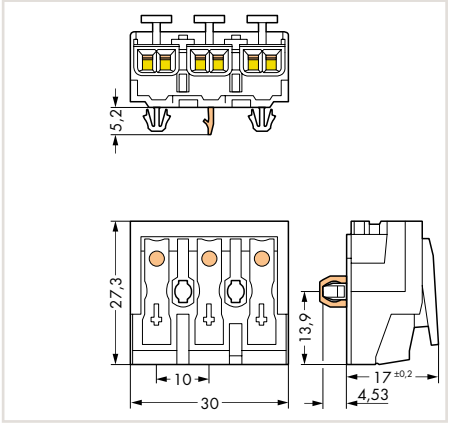

Dimensions in mm

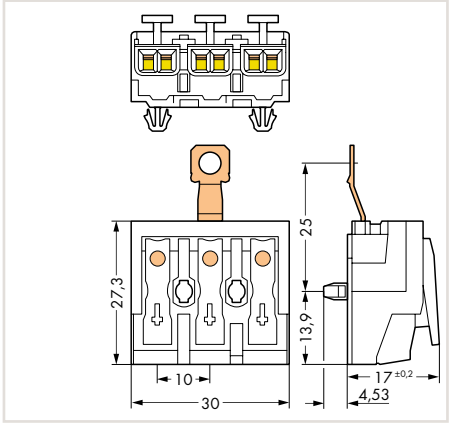

Dimensions in mm

Overview of certification organizations, see page 654

with snap-in ground contact	with angled snap-in ground contact





	Item No.	Pack. Unit		Item No.	Pack. Unit
Field-wiring terminal block, with snap-in ground contact, with snap-in mounting feet, 3-pole, white			Field-wiring terminal block, with angled snap-in ground contact, with snap-in mounting feet, 3-pole, white		
◯ N-PE-L	**294-5213**	500	◯ N-PE-L	**294-5313**	500
◯ N´-PE-L´	**294-5223**	500	◯ N´-PE-L´	**294-5323**	500
◯ 1-PE-N	**294-5253**	500	◯ 1-PE-N	**294-5353**	500
Field-wiring terminal block, with snap-in ground contact, without snap-in mounting feet, 3-pole, white			Field-wiring terminal block, with angled snap-in ground contact, without snap-in mounting feet, 3-pole, white		
◯ N-PE-L	**294-4213**	500	◯ N-PE-L	**294-4313**	500
◯ N´-PE-L´	**294-4223**	500	◯ N´-PE-L´	**294-4323**	500
◯ 1-PE-N	**294-4253**	500	◯ 1-PE-N	**294-4353**	500

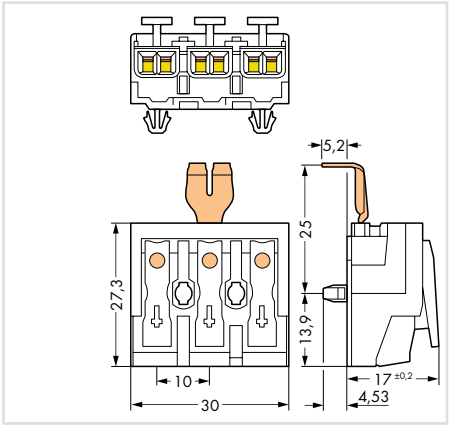

Dimensions in mm

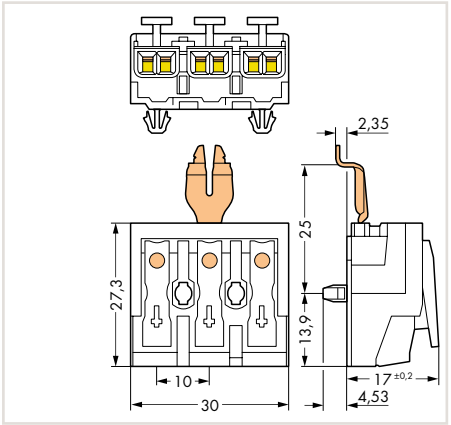

Dimensions in mm

Field-Wiring Terminal Blocks, 4-Pole

2.5 mm², 294 Series

without ground contact	with direct ground contact	with screw-type ground contact

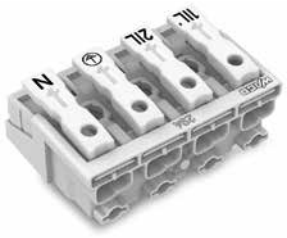



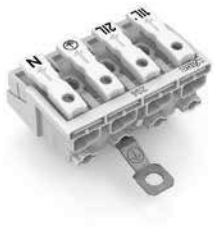

	Item No.	Pack. Unit
Field-wiring terminal block, without ground contact, with snap-in mounting feet, 4-pole, white		
◯ 1/L´-2/L-PE-N	**294-5024**	500
◯ 1-2-PE-N	**294-5014**	500
◯ 4-3-2-1	**294-5044**	500
◯ plain	**294-5004**	500
◯ 1/L´-2/L-E-N	**294-5094/4025-000**	500
Field-wiring terminal block, without ground contact, without snap-in mounting feet, 4-pole, white		
◯ 1/L´-2/L-PE-N	**294-4024**	500
◯ 1-2-PE-N	**294-4014**	500
◯ 4-3-2-1	**294-4044**	500
◯ plain	**294-4004**	500
◯ 1/L´-2/L-E-N	**294-4094/4025-000**	500

	Item No.	Pack. Unit
Field-wiring terminal block, with direct ground contact, with snap-in mounting feet, 4-pole, white		
◯ 1/L´-2/L-PE-N	**294-5124**	500
◯ 1-2-PE-N	**294-5114**	500

	Item No.	Pack. Unit
Field-wiring terminal block, with screw-type ground contact, with snap-in mounting feet, 4-pole, white		
◯ 1/L´-2/L-PE-N	**294-5424**	500
◯ 1-2-PE-N	**294-5414**	500
Field-wiring terminal block, with screw-type ground contact, without snap-in mounting feet, 4-pole, white		
◯ 1/L´-2/L-PE-N	**294-4424**	500
◯ 1-2-PE-N	**294-4414**	500

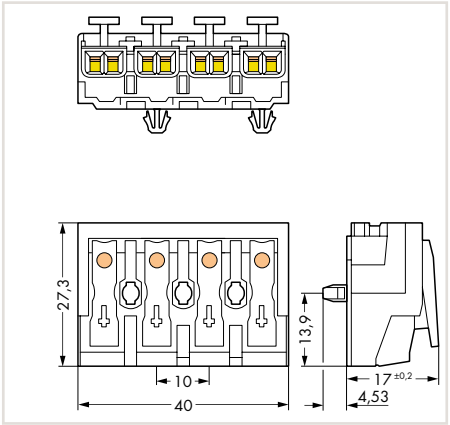

Dimensions in mm

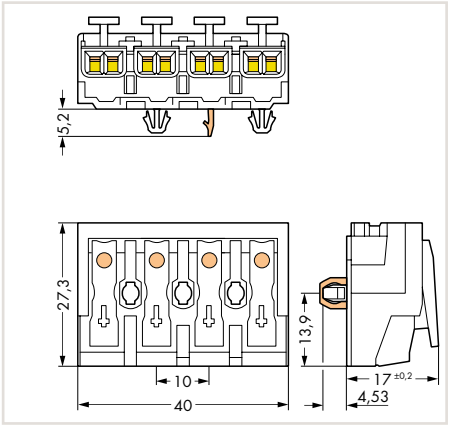

Dimensions in mm

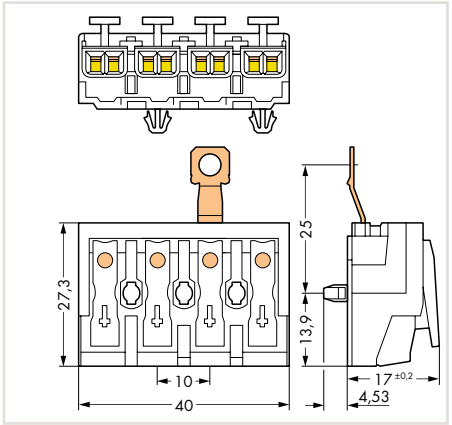

Dimensions in mm

with snap-in ground contact	with angled snap-in ground contact

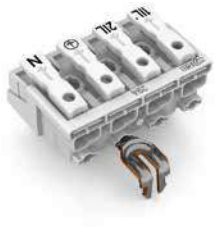



	Item No.	Pack. Unit		Item No.	Pack. Unit
Field-wiring terminal block, with snap-in ground contact, with snap-in mounting feet, 4-pole, white			Field-wiring terminal block, with angled snap-in ground contact, with snap-in mounting feet, 4-pole, white		
◯ 1/L´-2/L-PE-N	**294-5224**	500	◯ 1/L´-2/L-PE-N	**294-5324**	500
◯ 1-2-PE-N	**294-5214**	500	◯ 1-2-PE-N	**294-5314**	500
Field-wiring terminal block, without snap-in ground contact, without snap-in mounting feet, 4-pole, white			Field-wiring terminal block, with angled snap-in ground contact, without snap-in mounting feet, 4-pole, white		
◯ 1/L´-2/L-PE-N	**294-4224**	500	◯ 1/L´-2/L-PE-N	**294-4324**	500
◯ 1-2-PE-N	**294-4214**	500	◯ 1-2-PE-N	**294-4314**	500

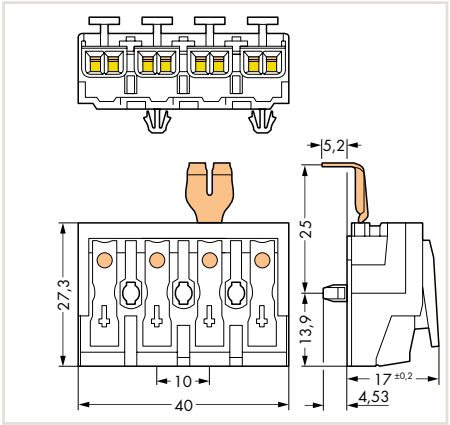

Dimensions in mm

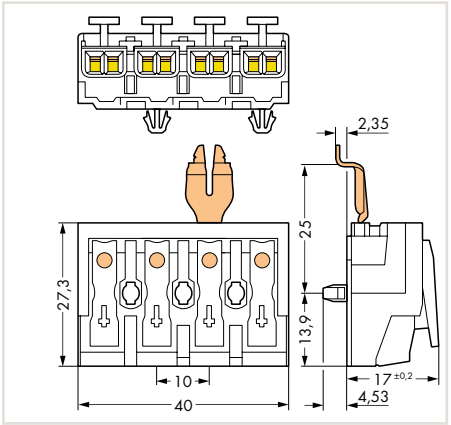

Dimensions in mm

Field-Wiring Terminal Blocks, 5-Pole

2.5 mm², 294 Series

without ground contact	with direct ground contact	with screw-type ground contact

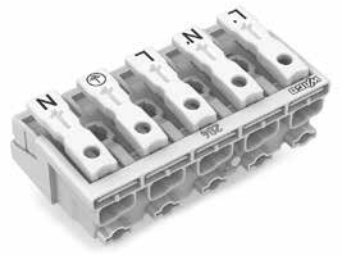





	Item No.	Pack. Unit
Field-wiring terminal block, without ground contact, with snap-in mounting feet, 5-pole, white		
◯ L´-N´-L-PE-N	**294-5025**	250
◯ L3-L2-L1-PE-N	**294-5015**	250
◯ DA+ DA- L PE N	**294-5035**	250
◯ DA- N PE L DA+	**294-5075**	250
◯ 3-N-PE-1-2	**294-5055**	250
◯ 5-4-3-2-1	**294-5045**	250
◯ plain	**294-5005**	250
◯ DA+ DA- L E N	**294-5095/5025-000**	250
◯ L3-L2-L1-E-N	**294-5095/5026-000**	250
◯ L´-N´-L-E-N	**294-5095/5027-000**	250
Field-wiring terminal block, without ground contact, without snap-in mounting feet, 5-pole, white		
◯ L´-N´-L-PE-N	**294-4025**	250
◯ L3-L2-L1-PE-N	**294-4015**	250
◯ DA+ DA- L PE N	**294-4035**	250
◯ DA- N PE L DA+	**294-4075**	250
◯ 3-N-PE-1-2	**294-4055**	250
◯ 5-4-3-2-1	**294-4045**	250
◯ plain	**294-4005**	250
◯ DA+ DA- L E N	**294-4095/5025-000**	250
◯ L3-L2-L1-E-N	**294-4095/5026-000**	250
◯ L´-N´-L-E-N	**294-4095/5027-000**	250

	Item No.	Pack. Unit
Field-wiring terminal block, with direct ground contact, with snap-in mounting feet, 5-pole, white		
◯ DA- N PE L DA+	**294-5175**	250
◯ 3-N-PE-1-2	**294-5155**	250

	Item No.	Pack. Unit
Field-wiring terminal block, with screw-type ground contact, with snap-in mounting feet, 5-pole, white		
◯ L´-N´-L-PE-N	**294-5425**	250
◯ L3-L2-L1-PE-N	**294-5415**	250
◯ DA+ DA- L PE N	**294-5435**	250
◯ DA- N PE L DA+	**294-5475**	250
◯ 3-N-PE-1-2	**294-5455**	250
Field-wiring terminal block, with screw-type ground contact, without snap-in mounting feet, 5-pole, white		
◯ L´-N´-L-PE-N	**294-4425**	250
◯ L3-L2-L1-PE-N	**294-4415**	250
◯ DA+ DA- L PE N	**294-4435**	250
◯ DA- N PE L DA+	**294-4475**	250
◯ 3-N-PE-1-2	**294-4455**	250

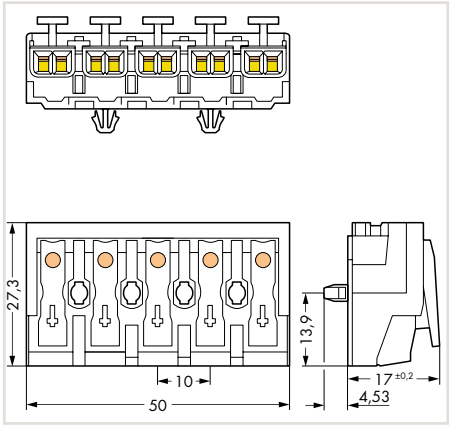

Dimensions in mm

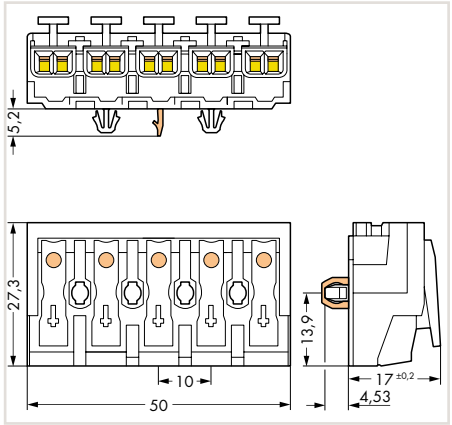

Dimensions in mm

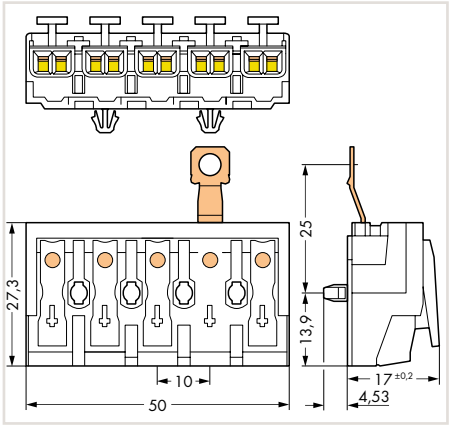

Dimensions in mm

Overview of certification organizations, see page 654

with snap-in ground contact	with angled snap-in ground contact





	Item No.	Pack. Unit		Item No.	Pack. Unit
Field-wiring terminal block, with snap-in ground contact, with snap-in mounting feet, 5-pole, white			Field-wiring terminal block, with angled snap-in ground contact, with snap-in mounting feet, 5-pole, white		
◯ L´-N´-L-PE-N	**294-5225**	250	◯ L´-N´-L-PE-N	**294-5325**	250
◯ L3-L2-L1-PE-N	**294-5215**	250	◯ L3-L2-L1-PE-N	**294-5315**	250
◯ DA+ DA- L PE N	**294-5235**	250	◯ DA+ DA- L PE N	**294-5335**	250
◯ DA- N PE L DA+	**294-5275**	250	◯ DA- N PE L DA+	**294-5375**	250
◯ 3-N-PE-1-2	**294-5255**	250	◯ 3-N-PE-1-2	**294-5355**	250
Field-wiring terminal block, with snap-in ground contact, without snap-in mounting feet, 5-pole, white			Field-wiring terminal block, with angled snap-in ground contact, without snap-in mounting feet, 5-pole, white		
◯ L´-N´-L-PE-N	**294-4225**	250	◯ L´-N´-L-PE-N	**294-4325**	250
◯ L3-L2-L1-PE-N	**294-4215**	250	◯ L3-L2-L1-PE-N	**294-4315**	250
◯ DA+ DA- L PE N	**294-4235**	250	◯ DA+ DA- L PE N	**294-4335**	250
◯ DA- N PE L DA+	**294-4275**	250	◯ DA- N PE L DA+	**294-4375**	250
◯ 3-N-PE-1-2	**294-4255**	250	◯ 3-N-PE-1-2	**294-4355**	250

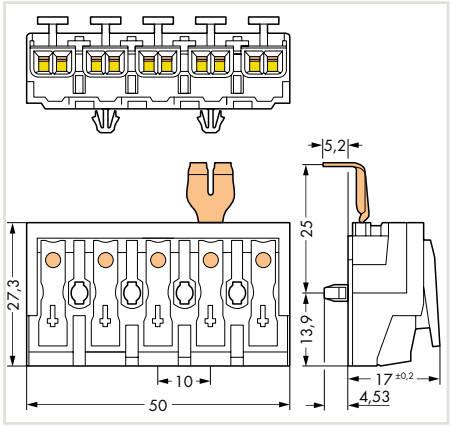

Dimensions in mm

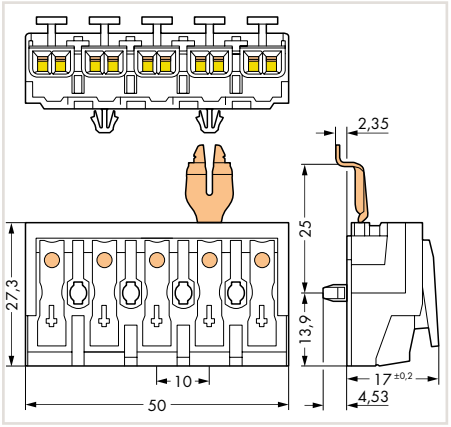

Dimensions in mm

Field-Wiring Terminal Blocks, 6- and 7-Pole and Tools

2.5 mm², 294 Series

without ground contact	without ground contact	Assembly tool







	Item No.	Pack. Unit
Field-wiring terminal block, without ground contact, without snap-in mounting feet, 6-pole, white		
◯ plain	**294-4006**	250

	Item No.	Pack. Unit
Field-wiring terminal block, without ground contact, without snap-in mounting feet, 7-pole, white		
◯ plain	**294-4007**	200

Item No.	Pack. Unit
Assembly tool, presses snap-in mounting feet into the mounting plate and fits ground contacts safely and easily	
294-199	1

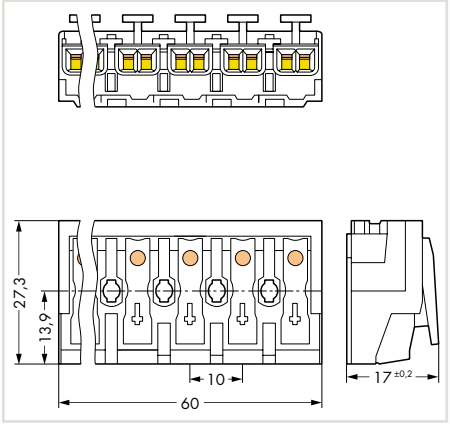

Dimensions in mm

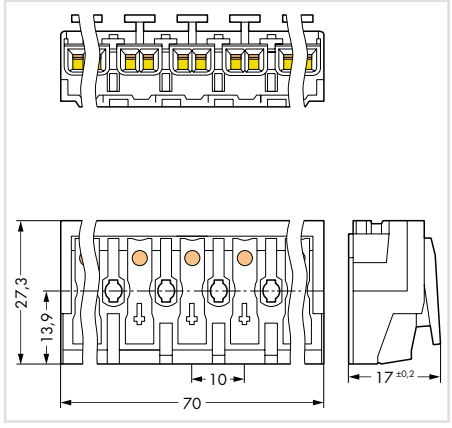

Dimensions in mm

Tools and Strain Relief Plates

Extraction tool	Strain relief plate	Strain relief







Item No.	Pack. Unit	Item No.	Item No.	Pack. Unit
Disconnection tool, removes conductors from PUSH WIRE® connections		Strain relief plate, with locking clip, 3- to 5-pole, for multicore cable: 1 x 5.2 ... 12 mm outer diameter	Strain relief; with snap-in mounting feet; for 4.5 ... 12 mm cable diameter	
206-294	1	◯ white **294-364**	◯ white **294-370**	500
		Strain relief plate, with locking clip, 3- to 5-pole, for single strands: min. 3 x 0.5 mm², max. 5 x 2.5 mm² or 7 x 1.5 mm²	Strain relief; for screw/rivet mounting; for 4.5 ... 12 mm cable diameter	
		◯ white **294-384**	◯ white **294-375**	500

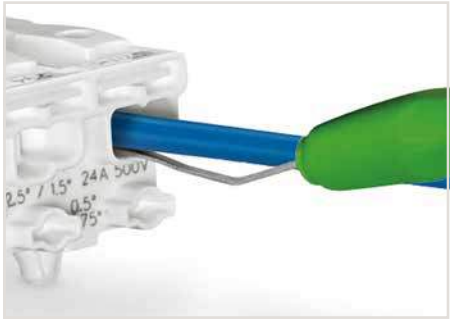

Conductor removal:
Slide disconnection tool beneath the conductor and pull both conductor and tool out.

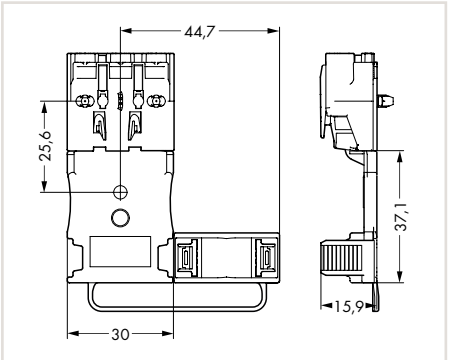

Dimensions in mm

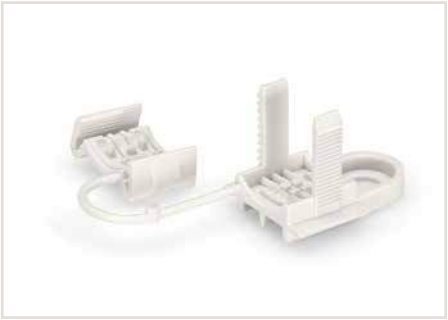

Strain relief, for screw/rivet mounting, for 4.5 ... 12 mm cable diameter

Drilled-Hole Patterns for Snap-In Mounting Feet

294 Series

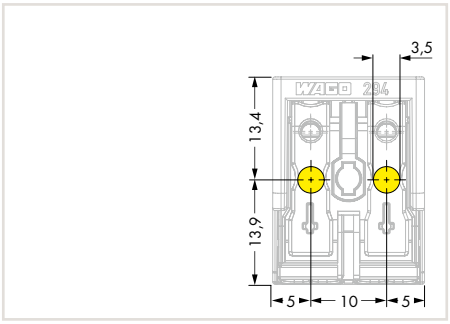

2-pole – without ground contact

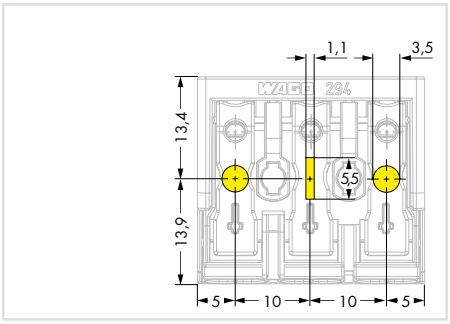

3-pole – with direct ground contact

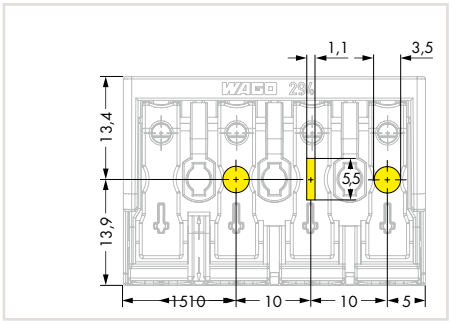

4-pole – with direct ground contact

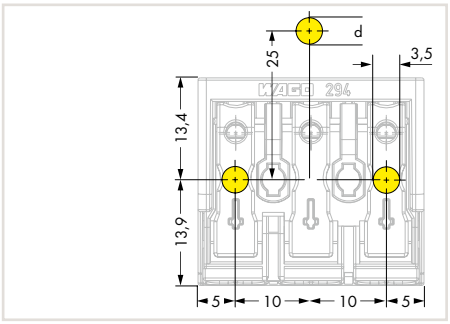

3-pole
with snap-in ground contact, d = 4.9 mm
with screw-type ground contact, d ≤ 4.1 mm

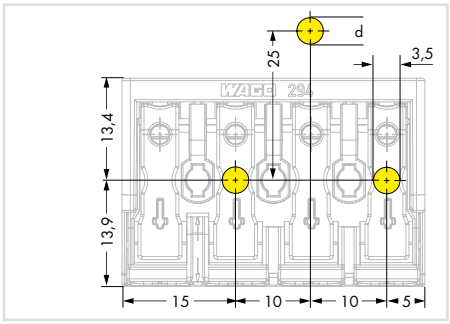

4-pole
with snap-in ground contact, d = 4.9 mm
with screw-type ground contact, d ≤ 4.1 mm

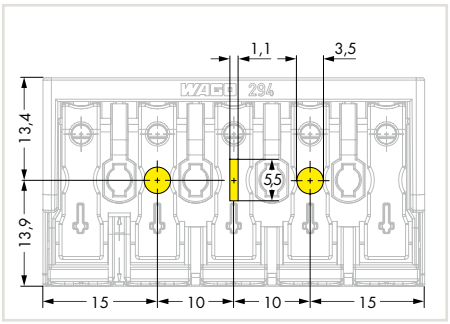

5-pole – with direct ground contact

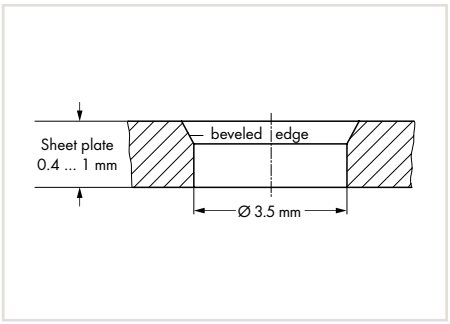

Drilled hole for snap-in mounting foot

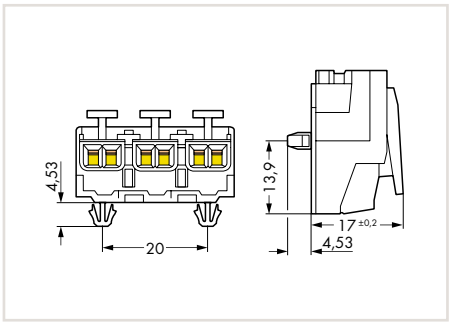

Snap-in mounting foot

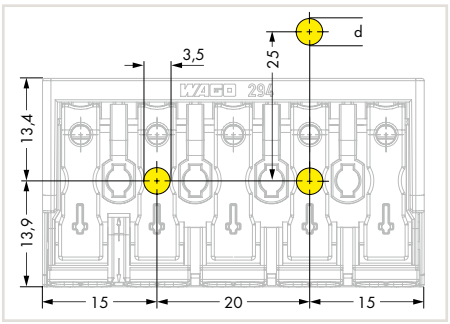

5-pole
with snap-in ground contact, d = 4.9 mm
with screw-type ground contact, d ≤ 4.1 mm

Drilled hole drawings of scale 1 : 1

Drilled-Hole Patterns for Screw Mounting

294 Series

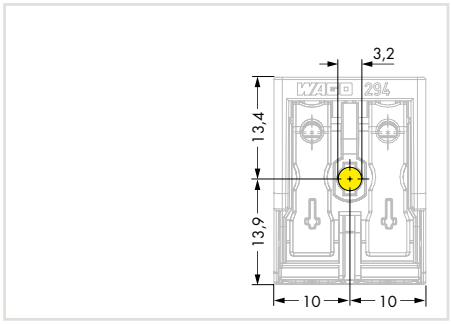

2-pole – without ground contact

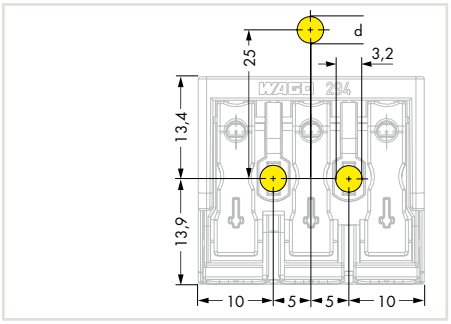

3-pole –
with snap-in ground contact, d = 4.9 mm
with screw-type ground contact, d ≤ 4.1 mm

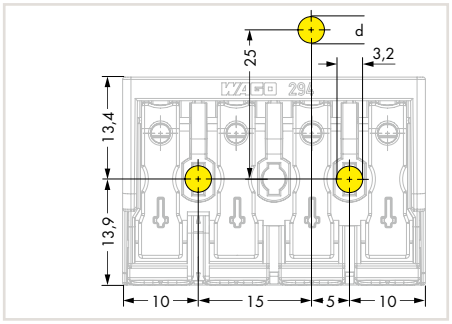

4-pole –
with snap-in ground contact, d = 4.9 mm
with screw-type ground contact, d ≤ 4.1 mm

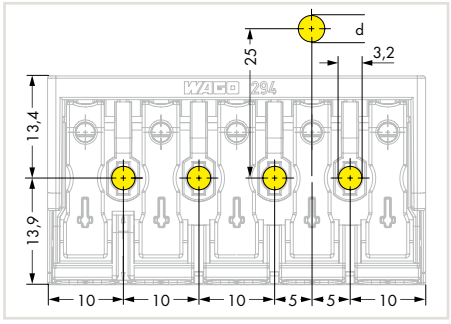

5-pole –
with snap-in ground contact, d = 4.9 mm
with screw-type ground contact, d ≤ 4.1 mm

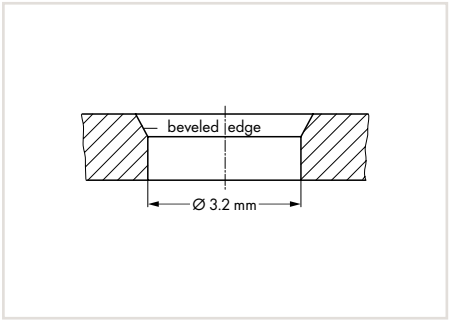

Hole for screw mount
Notice:
The maximum thread diameter for self-tapping screws is 3 mm.

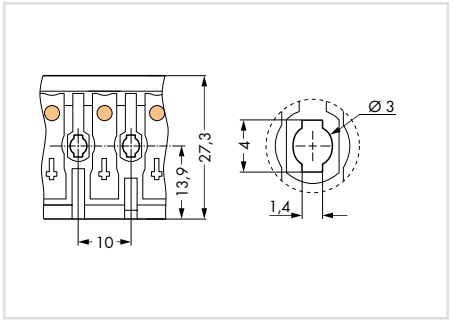

Mounting hole for screw
Notice:
The maximum thread diameter for self-tapping screws is 3 mm.

Drilled hole drawings of scale 1 : 1

Pluggable Connection System with Phase Selection for Fluorescent Lighting Fixtures Field-Wiring Terminal Blocks

2.5 mm², 293 Series

0.5 … 2.5 mm² "s"❶	AWG 20 … 14 "s"	
0.5 … 0.75 mm² "s"❶	AWG 20 … 18 "s"	
2.5 mm² "s" ❷	AWG 12 "s"	
500 V/4 kV/2 ❸		
I_N 20 A		
8 … 9 mm / 0.31 … 0.35 inch		

0.5 … 2.5 mm² "s"❶	AWG 20 … 14 "s"	
0.5 … 0.75 mm² "s"❶	AWG 20 … 18 "s"	
2.5 mm² "s" ❷	AWG 12 "s"	
500 V/4 kV/2 ❸		
I_N 20 A		
8 … 9 mm / 0.31 … 0.35 inch		

0.5 … 2.5 mm² "s"❶	AWG 20 … 14 "s"	
0.5 … 0.75 mm² "s"❶	AWG 20 … 18 "s"	
2.5 mm² "s" ❷	AWG 12 "s"	
500 V/4 kV/2 ❸		
I_N 20 A		
8 … 9 mm / 0.31 … 0.35 inch		

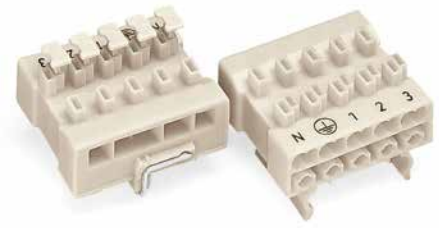

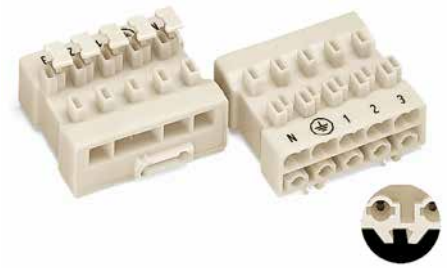



Pole No.	Item No.	Pack. Unit
Field-wiring terminal block, with snap-in foot and direct ground contact, with push-buttons on the field-wiring side, white		
5	**293-325**	250
without push-buttons		
5	**293-225**	250

Pole No.	Item No.	Pack. Unit
Field-wiring terminal block, with dovetail and without direct ground contact, with push-buttons on the field-wiring side, white		
5	**293-220**	250
without push-buttons		
5	**293-219**	250

Pole No.	Item No.	Pack. Unit
Field-wiring terminal block, with snap-in mounting feet and direct ground contact, with push-buttons on the field-wiring side, white		
5	**293-222**	250
without push-buttons		
5	**293-221**	250

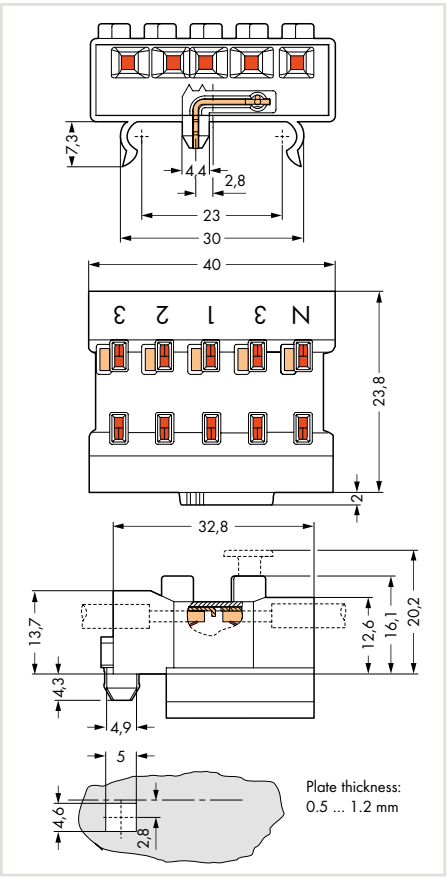

Dimensions in mm

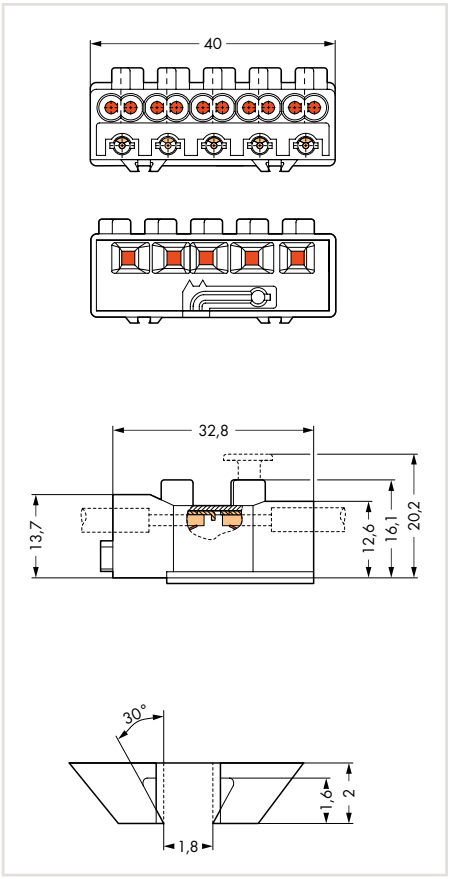

Dimensions in mm

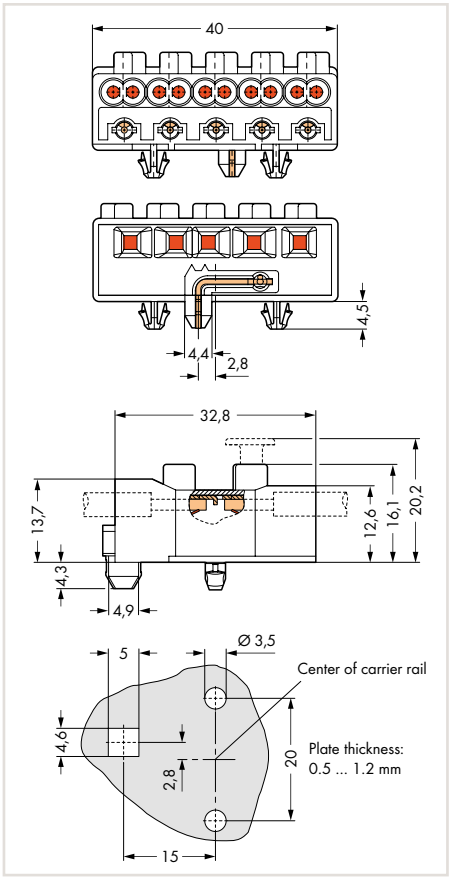

Dimensions in mm

Metal plate cutout for direct ground contact must be free of varnish and oxide films.
Equipped with varnished metal plates upon request.

Metal plate cutout for direct ground contact must be free of varnish and oxide films.
Equipped with varnished metal plates upon request.

Overview of certification organizations, see page 654

PUSH WIRE®

0.5 ... 2.5 mm² "s"❶	AWG 20 ... 14 "s"
0.5 ... 0.75 mm² "s"❶	AWG 20 ... 18 "s"
2.5 mm² "s" ❷	AWG 12 "s"

500 V/4 kV/2 ❸
I_N 20 A
8 ... 9 mm / 0.31 ... 0.35 inch

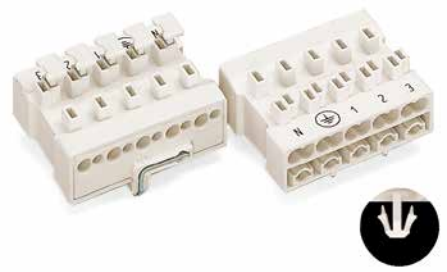

❶ Power supply side
❷ Lighting side
❸ 500 V = rated voltage
4 kV = rated surge voltage
2 = pollution degree
(see Section 14)

Pole No.	Item No.	Pack. Unit
Field-wiring terminal block, with snap-in mounting feet and direct ground contact, with push-buttons on the field-wiring side, white		
◯ 5	**293-230**	250
without push-buttons		
◯ 5	**293-228**	250

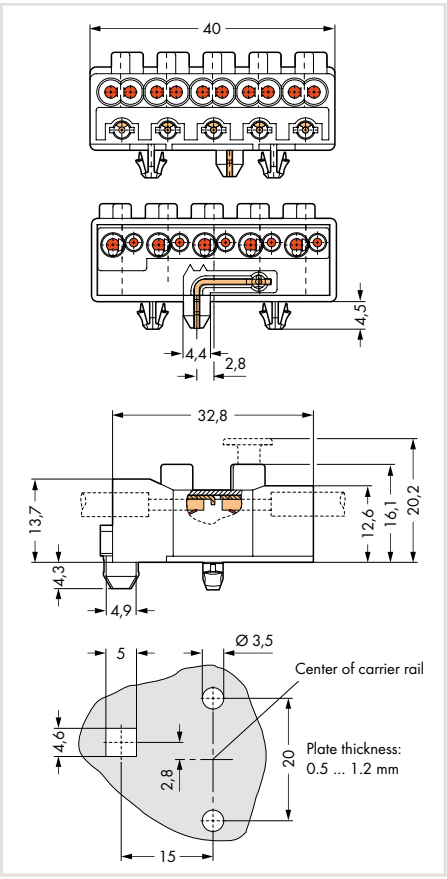

Dimensions in mm

Metal plate cutout for direct ground contact must be free of varnish and oxide films.
Equipped with varnished metal plates upon request.

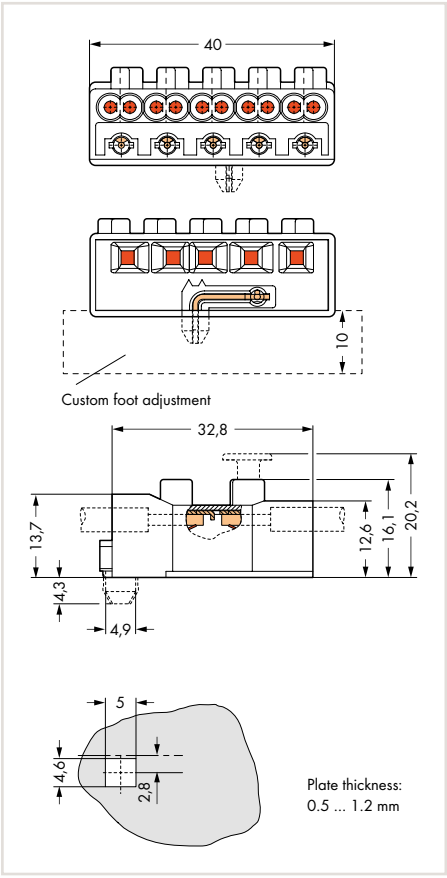

Dimensions in mm

Field-wiring terminal block with custom foot, with and without direct ground contact, white, with and without push-buttons on the field-wiring side

Metal plate cutout for direct ground contact must be free of varnish and oxide films.
Equipped with varnished metal plates upon request.

9

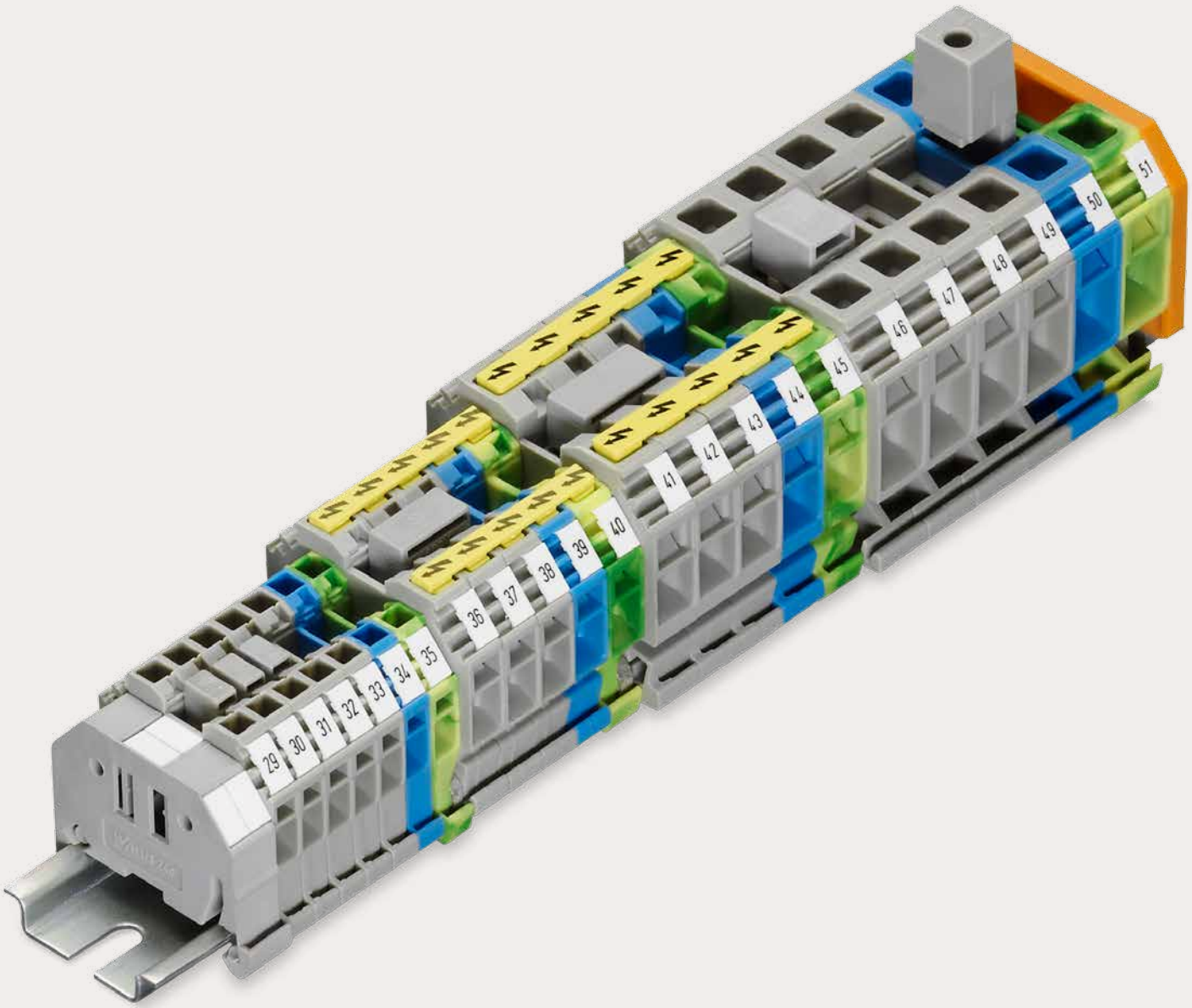

Rail-Mount Terminal Blocks, Classic

CAGE CLAMP®

Rail-Mount Terminal Blocks, Classic

Side-Entry Wiring

			Page
	**Through and Ground Conductor Terminal Blocks** 0.08 … 16 mm² (28 … 6 AWG)	279 … 283 Series	490
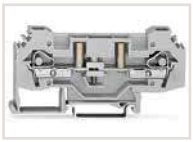	**Disconnect/Test Terminal Blocks, Ground Conductor Disconnect Terminal Blocks** 0.2 … 6 mm² (24 … 10 AWG)	282 Series	494
	**Fuse Terminal Blocks** 0.2 … 6 mm² (24 … 10 AWG)	282 Series	496

10

Side-Entry Rail-Mount Terminal Blocks, 279 ... 284 Series

Description and Installation

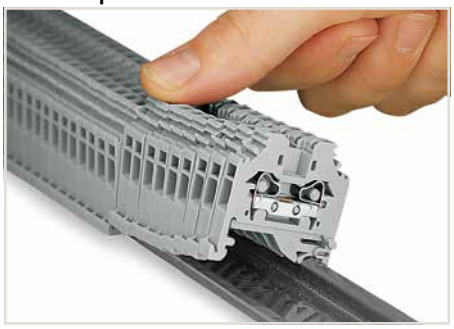

Snapping side-entry rail-mount terminal blocks onto the carrier rail.

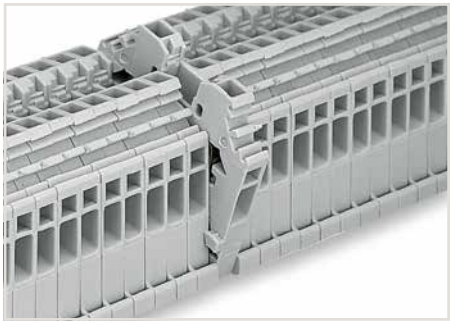

Quick assembly keys prevent reverse mounting.

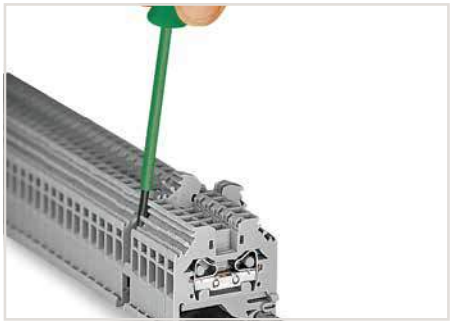

Removing a terminal block from the assembly.

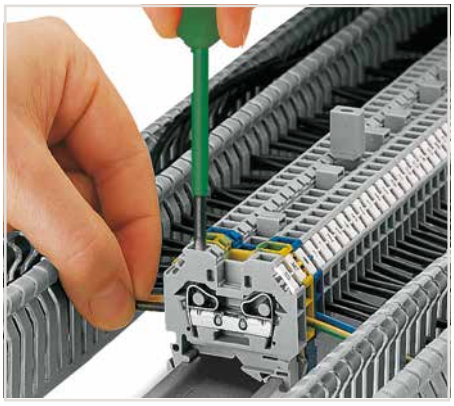

CAGE CLAMP® connection
Inserting a conductor via screwdriver.
With ferruled conductors, it is necessary to use a terminal block one size larger than the conductor's nominal cross-section.

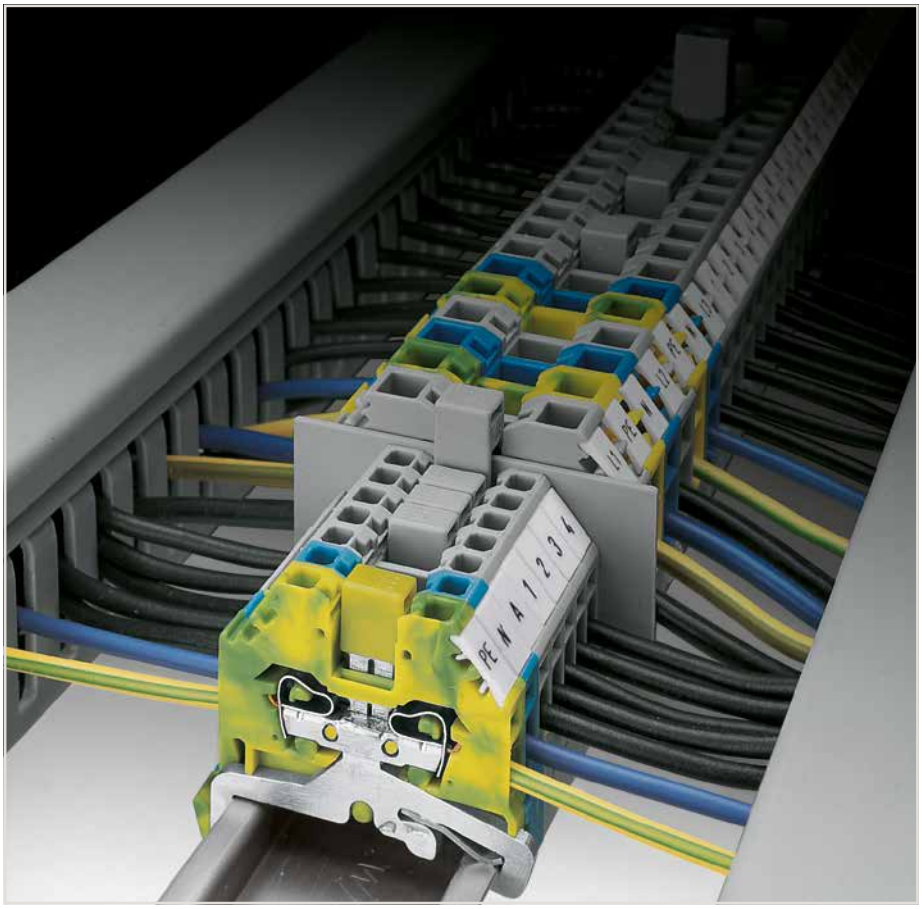

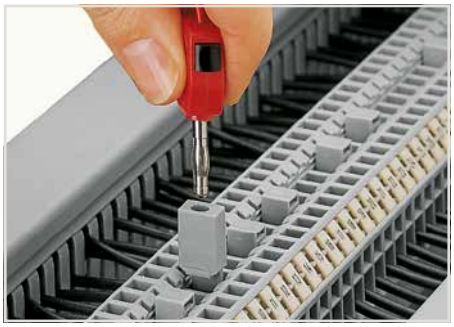

Testing with a test plug
(picture shows 209-170 Test Plug Adapter).



Commoning using an adjacent jumper (280-402).
Push jumper down until fully inserted.



Commoning side-entry rail-mount terminal blocks via step-down jumpers.
Step down jumper down until fully inserted.



CAGE CLAMP® terminates the following copper conductors:
solid



stranded



fine-stranded,
also with tinned
single strands

For aluminum conductors, see notes in Section 14.



Suitable for all DIN-35 rails

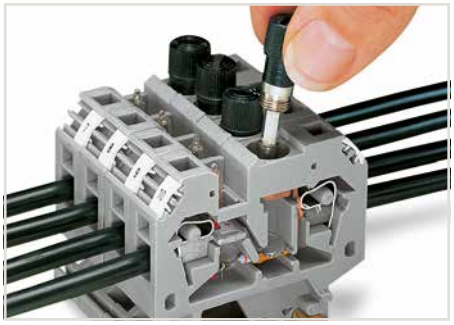

Replacing a fuse.

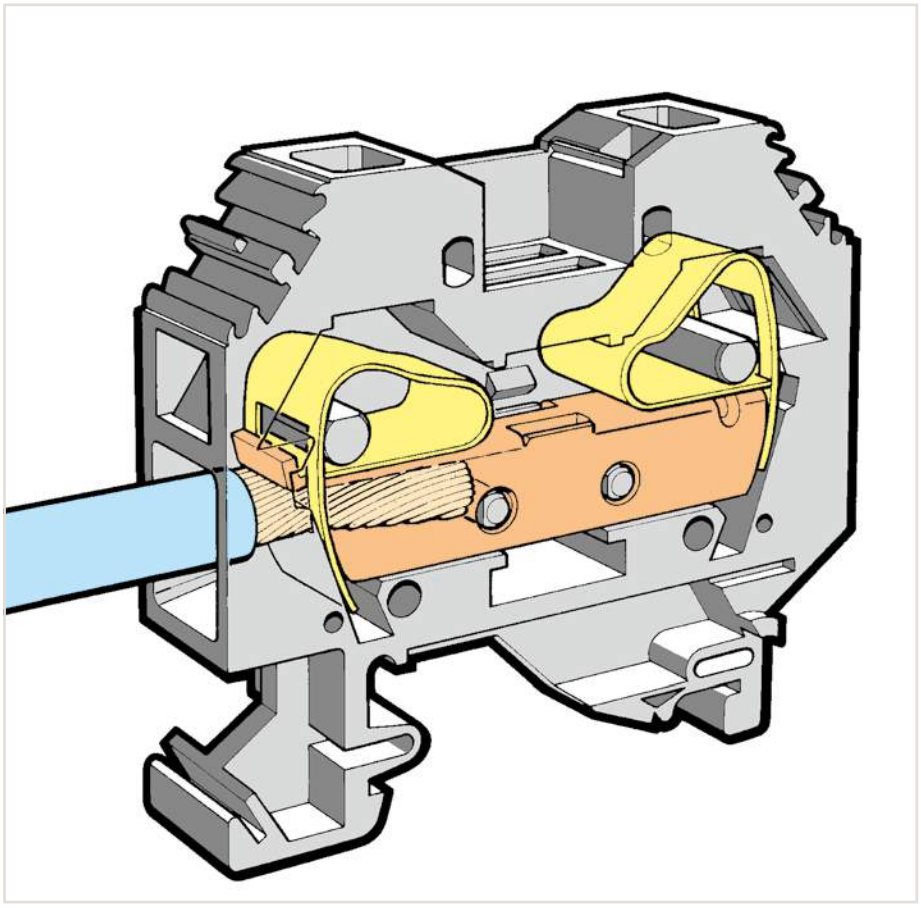

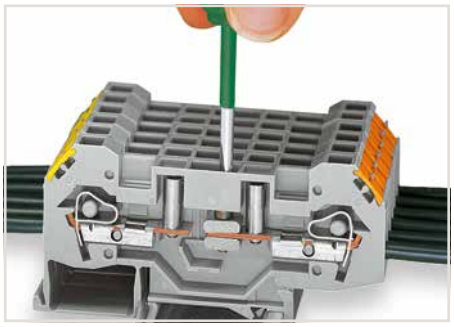

Shifting the disconnect slide link of a disconnect/test terminal block.

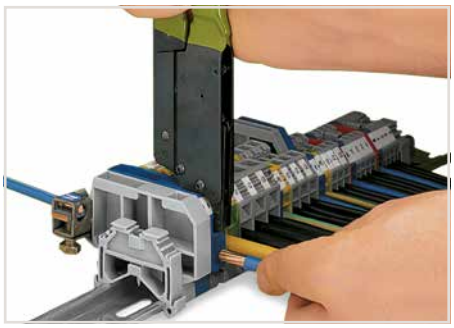

When operating the handles beyond the locked position, the ratchet allows the tool to open and be removed from the terminal block.



Labeling via WMB Multi Marking System.



fine-stranded, tip-bonded



fine-stranded, with ferrule (gastight crimped)



fine-stranded, with pin terminal (gastight crimped)

Through and Ground Conductor Terminal Blocks

1.5 mm², 279 Series and 2.5 mm², 280 Series and 4 mm², 281 Series and 6 mm², 282 Series

0.08 ... 1.5 mm²	28 ... 16 AWG
800 V/8 kV/3 ❶	600 V, 10 A
I_N 18 A	600 V, 15 A

Terminal block width 4 mm / 0.157 inch
8 ... 9 mm / 0.31 ... 0.35 inch

0.08 ... 2.5 mm²	28 ... 12 AWG*
800 V/8 kV/3 ❶	600 V, 20 A
I_N 24 A	600 V, 20 A

Terminal block width 5 mm / 0.197 inch
8 ... 9 mm / 0.31 ... 0.35 inch

0.08 ... 4 mm²	28 ... 12 AWG
800 V/8 kV/3 ❶	600 V, 20 A
I_N 32 A	600 V, 25 A

Terminal block width 6 mm / 0.236 inch
9 ... 10 mm / 0.35 ... 0.39 inch

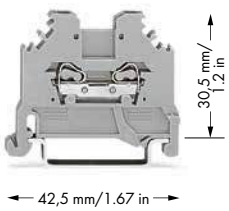

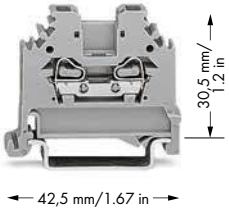

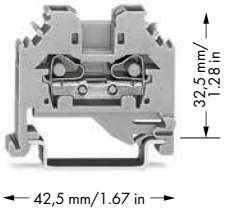

	Item No.	Pack. Unit
2-conductor through terminal block		
gray	**279-101**	100
blue	**279-104** ❷	100

Item-Specific Accessories

End and intermediate plate, 2.5 mm thick			
	orange	**280-302**	100 (4x25)
	gray	**280-301**	100 (4x25)
Separator, oversized, 2 mm thick			
	orange	**280-322**	100 (4x25)
	gray	**280-332**	100 (4x25)
Adjacent jumper, insulated, I_N 15 A			
	gray	**279-402**	200 (8x25)
	yellow-green	**279-422**	200 (8x25)
Alternate jumper, insulated, I_N 15 A			
	gray	**279-409**	100 (4x25)
Step-down jumper, insulated, commons 10/6 mm² (8/10 AWG) down to 4/2.5/1.5 mm² (12/14/16 AWG), I_N 15 A ❸			
	gray	**284-414**	50 (2x25)
Step-down intermediate plate, 1 mm thick			
	gray	**281-333**	100 (4x25)
	orange	**281-336**	100 (4x25)
Protective warning marker, with black high-voltage symbol, for 5 terminal blocks			
	yellow	**279-405**	100 (4x25)
Test plug adapter, 8.3 mm wide, for 4 mm Ø test plug, for 1.5 ... 10 mm² terminal blocks			
	gray	**209-170**	50 (2x25)
Test plug adapter, 5 mm wide, for 210-137 test plug 2.3 mm Ø, for 1.5 ... 4 mm² terminal blocks			
	gray	**280-404**	100 (4x25)

	Item No.	Pack. Unit
2-conductor through terminal block		
gray	**280-101**	100
blue	**280-104** ❷	100
2-conductor ground terminal block		
green-yellow	**280-107**	100

Item-Specific Accessories

End and intermediate plate, 2.5 mm thick			
	orange	**280-302**	100 (4x25)
	gray	**280-301**	100 (4x25)
Separator, oversized, 2 mm thick			
	orange	**280-322**	100 (4x25)
	gray	**280-332**	100 (4x25)
Adjacent jumper, insulated, I_N = I_N terminal block			
	gray	**280-402**	200 (8x25)
	yellow-green	**280-422**	200 (8x25)
Alternate jumper, insulated, I_N = I_N terminal block			
	gray	**280-409**	100 (4x25)
Step-down jumper, insulated, commons 10/6 mm² (8/10 AWG) down to 4/2.5/1.5 mm² (12/14/16 AWG), I_N 15 A ❸			
	gray	**284-414**	50 (2x25)
Step-down intermediate plate, 1 mm thick			
	gray	**281-333**	100 (4x25)
	orange	**281-336**	100 (4x25)
Protective warning marker, with black high-voltage symbol, for 5 terminal blocks			
	yellow	**280-405**	100 (4x25)
Test plug adapter, 8.3 mm wide, for 4 mm Ø test plug, for 1.5 ... 10 mm² terminal blocks			
	gray	**209-170**	50 (2x25)
Test plug adapter, 5 mm wide, for 210-137 test plug 2.3 mm Ø, for 1.5 ... 4 mm² terminal blocks			
	gray	**280-404**	100 (4x25)

	Item No.	Pack. Unit
2-conductor through terminal block		
gray	**281-101**	100
blue	**281-104** ❷	100
2-conductor ground terminal block		
green-yellow	**281-107**	100

Item-Specific Accessories

End and intermediate plate, 3 mm thick			
	orange	**281-302**	100 (4x25)
	gray	**281-301**	100 (4x25)
Separator, oversized, 2 mm thick			
	orange	**281-322**	100 (4x25)
	gray	**281-332**	100 (4x25)
Adjacent jumper, insulated, I_N = I_N terminal block			
	gray	**281-402**	200 (8x25)
	yellow-green	**281-422**	200 (8x25)
Alternate jumper, insulated, I_N = I_N terminal block			
	gray	**281-409**	100 (4x25)
Step-down jumper, insulated, commons 10/6 mm² (8/10 AWG) down to 4/2.5/1.5 mm² (12/14/16 AWG), I_N 15 A ❸			
	gray	**284-414**	50 (2x25)
Step-down intermediate plate, 1 mm thick			
	gray	**281-333**	100 (4x25)
	orange	**281-336**	100 (4x25)
Step-down jumper, insulated, commons 10/6 mm² (8/10 AWG) down to 6/4 mm² (10/12 AWG), I_N 30 A			
	gray	**284-413**	50 (2x25)
Step-down jumper, insulated, I_N 32 A			
	gray	**283-414**	50 (2x25)
Protective warning marker, with black high-voltage symbol, for 5 terminal blocks			
	yellow	**281-405**	100 (4x25)
Test plug adapter, 8.3 mm wide, for 4 mm Ø test plug, for 1.5 ... 10 mm² terminal blocks			
	gray	**209-170**	50 (2x25)

0.2 ... 6 mm²	24 ... 10 AWG
800 V/8 kV/3 ❶	600 V, 30 A
I_N 41 A	600 V, 10 A

Terminal block width 8 mm / 0.315 inch
12 ... 13 mm / 0.47 ... 0.51 inch

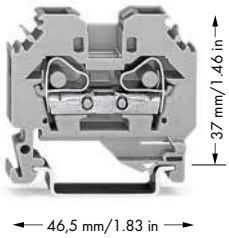

Carrier rail	Item No.	Curre[A]	Acc. to mm²/AWG Cu
DIN 35 x 7.5 (steel)			
slotted	210-112	76	16/6
unslotted	210-113	76	16/6
DIN 35 x 15 (steel)			
1.5 mm thick	210-114	125	35/2
2.3 mm thick	210-118	125	35/2
DIN 35 x 7.5 (Al)			
unslotted	210-196	76	16/6
DIN 35 x 15 (Cu)			
2.3 mm thick	210-198	309	150/6/0

Current applies to rails of 1 m/3'3" length

When using standard carrier rails as ground conductor busbars, please refer to the maximum current capacities listed above.
Steel carrier rails are not suited for PEN (ground and N-conductor) applications per EN 60947-7-2 (VDE 0611, Part 3).

* 12 AWG: THHN, THWN

❶ 800 V = rated voltage
8 kV = rated surge voltage
3 = pollution degree
(also see Section 14)

❷ Suitable for Ex i applications

❸ See application notes for:
Step-down jumper, page 493
Test plug module, page 329

	Item No.	Pack. Unit
2-conductor through terminal block		
gray	**282-101**	50
blue	**282-104** ❷	50
2-conductor ground terminal block		
green-yellow	**282-107**	50

Item-Specific Accessories

End and intermediate plate, 4 mm thick			
	orange	**282-302**	100 (4x25)
	gray	**282-301**	100 (4x25)
Separator, oversized, 2 mm thick			
	orange	**282-322**	100 (4x25)
	gray	**282-332**	100 (4x25)
Adjacent jumper, insulated, I_N 41 A			
	gray	**282-402**	100 (4x25)
	yellow-green	**282-422**	100 (4x25)
Alternate jumper, insulated, I_N 41 A			
	gray	**282-409**	100 (4x25)
Step-down jumper, insulated, commons 10/6 mm² (8/10 AWG) down to 6/4 mm² (10/12 AWG), I_N 30 A ❸			
	gray	**284-413**	50 (2x25)
Step-down cover plate, 1 mm thick			
	gray	**284-333**	100 (4x25)
	orange	**284-343**	100 (4x25)
Protective warning marker, with black high-voltage symbol, for 5 terminal blocks			
	yellow	**282-405**	100 (4x25)
Test plug adapter, 8.3 mm wide, for 4 mm Ø test plug, for 1.5 ... 10 mm² terminal blocks			
	gray	**209-170**	50 (2x25)
B-type test plug module, snaps together, 8 mm wide ❹			
	gray	**709-310**	100 (4x25)
B-type spacer module, snaps together, 8 mm wide			
	gray	**709-311**	100 (4x25)

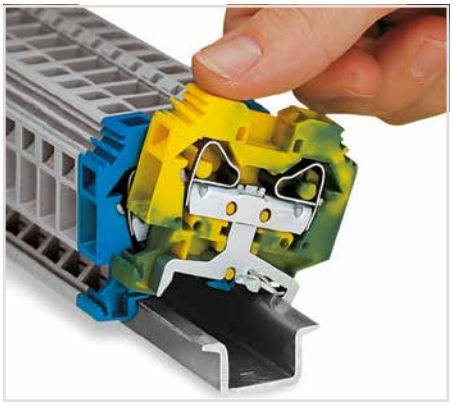

Snapping a terminal block onto the carrier rail.
Ground conductor terminal blocks snap onto the rail in the same way as through terminal blocks, but automatically make a direct electrical connection to the rail. After mounting, sliding the blocks on the rail is not possible.

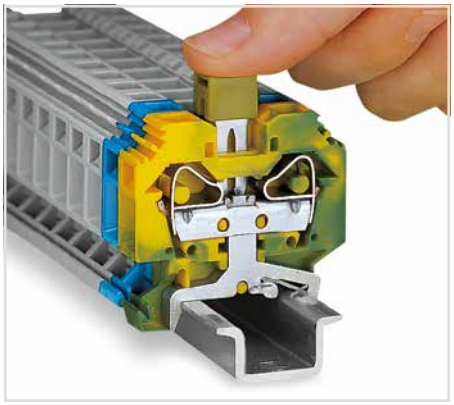

Push jumper down until fully inserted.
Commoning ground conductor terminal blocks with through terminal blocks is possible in one direction only (via rear side of terminal block) using adjacent jumpers. WAGO recommends using yellow-green adjacent jumpers in addition to the required marking of these blocks.

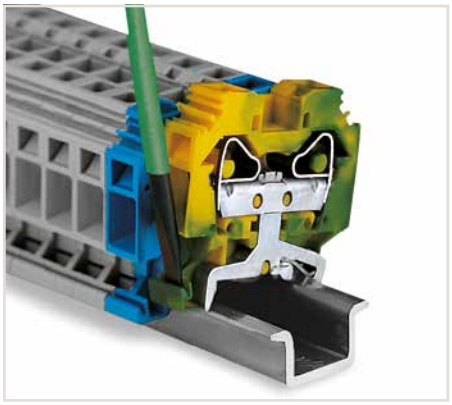

Removing a terminal block from the carrier rail.
When mounting on the rail, ensure that open sides of terminal blocks face in the same direction.
Both mounting feet and removal slots are on the same side for all terminal blocks, making it possible to visually ensure blocks are facing in same direction.

10

Through and Ground Conductor Terminal Blocks

10 mm², 284 Series and 16 mm², 283 Series

0.2 … 10 mm²	**24 … 8 AWG**
800 V/8 kV/3 ❶	**600 V, 50 A**
I_N 57 A	**600 V, 65 A**
Terminal block width 10 mm / 0.394 inch	
12 … 13 mm / 0.47 … 0.51 inch	

0.2 … 16 mm²	**24 … 6 AWG**
800 V/8 kV/3 ❶	**600 V, 65 A**
I_N 76 A	**600 V, 90 A**
Terminal block width 12 mm / 0.472 inch	
16 … 17 mm / 0.63 … 0.67 inch	

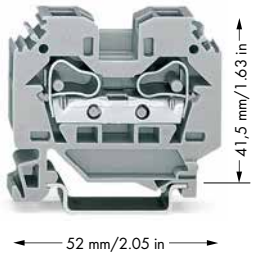

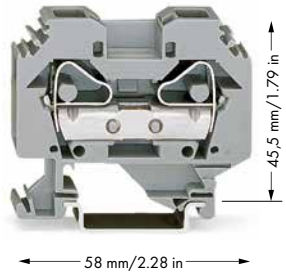

❶ 800 V = rated voltage
8 kV = rated surge voltage
3 = pollution degree
(also see Section 14)

❷ See application notes for:
Step-down jumper, page 493
Test plug module, page 329

	Item No.	Pack. Unit
2-conductor through terminal block		
gray	**284-101**	50
blue	**284-104**	50
2-conductor ground terminal block		
green-yellow	**284-107**	50

	Item No.	Pack. Unit
2-conductor through terminal block		
gray	**283-101**	50
blue	**283-104**	50
2-conductor ground terminal block		
green-yellow	**283-107**	50

Item-Specific Accessories

End and intermediate plate, 2.5 mm thick			
	orange	**284-302**	100 (4x25)
	gray	**284-301**	100 (4x25)
Separator, oversized, 2 mm thick			
	orange	**284-322**	100 (4x25)
	gray	**284-332**	100 (4x25)
Adjacent jumper, insulated, I_N 57 A			
	gray	**284-402**	100 (4x25)
	yellow-green	**284-422**	100 (4x25)
Alternate jumper, insulated, I_N 57 A			
	gray	**284-409**	50 (2x25)
Step-down jumper, insulated, commons 10/6 mm² (8/10 AWG) down to 6/4 mm² (10/12 AWG), I_N 30 A ❷			
	gray	**284-413**	50 (2x25)
Step-down cover plate, 1 mm thick			
	gray	**284-333**	100 (4x25)
	orange	**284-343**	100 (4x25)
Protective warning marker, with black high-voltage symbol, for 5 terminal blocks			
	yellow	**284-405**	50 (2x25)
Test plug adapter, 8.3 mm wide, for 4 mm Ø test plug, for 1.5 … 10 mm² terminal blocks			
	gray	**209-170**	50 (2x25)
B-type test plug module, snaps together, 8 mm wide ❸			
	gray	**709-310**	100 (4x25)
B-type spacer plate, snaps together, 2 mm wide			
	gray	**709-312**	100 (4x25)

Item-Specific Accessories

End and intermediate plate, 4 mm thick			
	orange	**283-302**	50 (2x25)
	gray	**283-301**	50 (2x25)
Separator, oversized, 2 mm thick			
	orange	**283-322**	50 (2x25)
	gray	**283-332**	50 (2x25)
Adjacent jumper, insulated, I_N 70 A			
	gray	**283-402**	50 (2x25)
	yellow-green	**283-422**	50 (2x25)
Alternate jumper, insulated, I_N 76 A			
	gray	**283-409**	50 (2x25)
Step-down jumper, insulated, commons 16 mm² (6 AWG) down to 4 mm² (12 AWG), I_N 32 A ❷			
	gray	**283-414**	50 (2x25)
Step-down cover plate, 1 mm thick			
	gray	**283-333**	100 (4x25)
	orange	**283-335**	100 (4x25)
Protective warning marker, with black high-voltage symbol, for 5 terminal blocks			
	yellow	**283-405**	50 (2x25)
Test plug adapter, 11.6 mm wide, for 4 mm Ø test plug, for 1.5 … 16 mm² terminal blocks			
	gray	**283-404**	25



Step-down jumpers common terminal blocks of different sizes, without losing a conductor clamping point. This can be beneficial on long conductor runs where voltage drop can be a problem. A large conductor can be easily connected to smaller conductors at the distribution point.

Step-down jumpers are simply pushed down for full insertion, similar to adjacent jumpers. Commoning may be made in either direction using the special thin end plate to cover the open side. Additional through terminal blocks having a smaller cross-section may be commoned using adjacent jumpers.

In this case, pay attention that:
- The total current of the outgoing circuits does not exceed the nominal current of the step-down jumper.
- The standard or special thin cover plate is installed on the open side of the larger block.

10

Step-Down Jumpers for Side-Entry Through Terminal Blocks*

Installation

Step-down jumper	Step-down jumper





* Terminal blocks for side-entry cannot be commoned with terminal blocks for front-entry.
For commoning terminal blocks, front-entry via step-down jumpers, see page 234

	Item No.	Pack. Unit
Step-down jumper, insulated, commons 10/6 mm² (8/10 AWG) down to 4/2.5/1.5 mm² (12/14/16 AWG), I_N 15 A		
gray	**284-414**	50 (2x25)
Step-down jumper, insulated, commons 10/6 mm² (8/10 AWG) down to 6/4 mm² (10/12 AWG), I_N 30 A		
gray	**284-413**	50 (2x25)

	Item No.	Pack. Unit
Step-down jumper, insulated, commons 16 mm² (6 AWG) down to 4 mm² (12 AWG), I_N 32 A		
gray	**283-414**	50 (2x25)

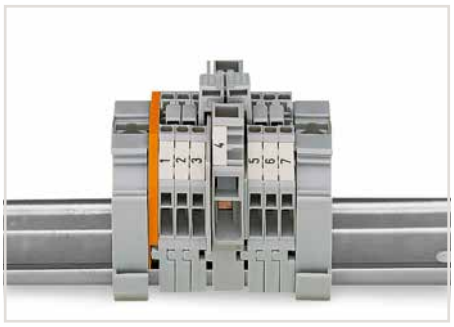

Commoning from 6 mm²/10 AWG (282 Series) to 1.5 mm²/16 AWG (279 Series) front-entry rail-mount terminal blocks.

Item-Specific Accessories

	Item No.	Pack. Unit
Step-down cover plate, 1 mm thick		
gray	**284-333**	100 (4x25)
orange	**284-343**	100 (4x25)
Step-down intermediate plate, 1 mm thick		
gray	**281-333**	100 (4x25)
orange	**281-336**	100 (4x25)

Item-Specific Accessories

	Item No.	Pack. Unit
Step-down cover plate, 1 mm thick		
gray	**283-333**	100 (4x25)
orange	**283-335**	100 (4x25)

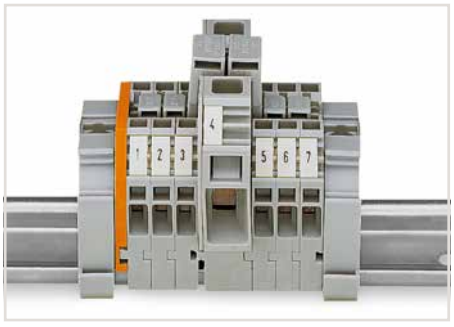

Commoning from 16 mm²/6 AWG (283 Series) to 4 mm²/12 AWG (281 Series) rail-mount terminal blocks via step-down jumpers.

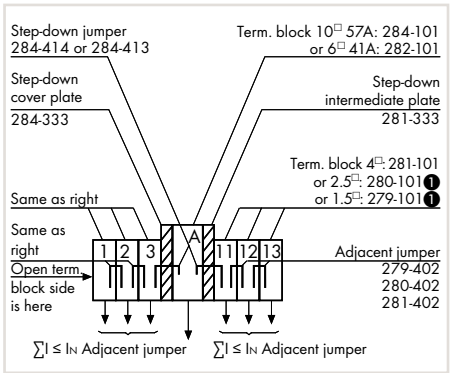

Assembly example: Commoning from 10/6 mm² (8/10 AWG) to 4/2.5/1.5 mm² (12/14/16 AWG) rail-mount terminal blocks via step-down jumper (284-414).
❶ Commoning from 10 mm² (284-101) to 2.5 mm² (280-101) or 1.5 mm² (279-101) terminal blocks via terminal block rear side is not possible (see example: terminal block A to 11).

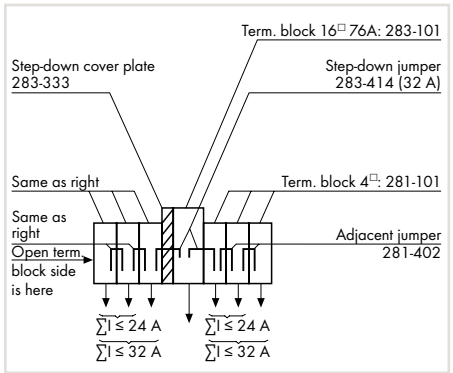

Assembly example: Commoning from 16 mm²/6 AWG to 4 mm²/12 AWG rail-mount terminal blocks via step-down jumper (283-414).

10

Disconnect/Test Terminal Blocks and Ground Conductor Disconnect Terminal Blocks

6 mm², 282 Series

0.2 … 6 mm²	24 … 10 AWG	
400 V/6 kV/3 ❶	300 V, 30 A	
I_N 41 A	300 V, 40 A	
Terminal block width 8 mm / 0.315 inch		
12 … 13 mm / 0.47 … 0.51 inch		

0.2 … 6 mm²	24 … 10 AWG	
400 V/6 kV/3 ❶	300 V, 30 A	
I_N 41 A	300 V, 40 A	
Terminal block width 8 mm / 0.315 inch		
12 … 13 mm / 0.47 … 0.51 inch		

0.2 … 6 mm²	24 … 10 AWG	
400 V/6 kV/3 ❶	300 V, 30 A	
I_N 41 A	300 V, 40 A	
Terminal block width 8 mm / 0.315 inch		
12 … 13 mm / 0.47 … 0.51 inch		

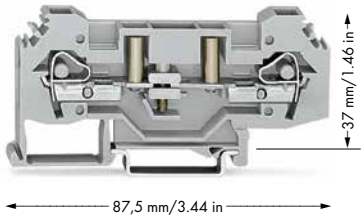

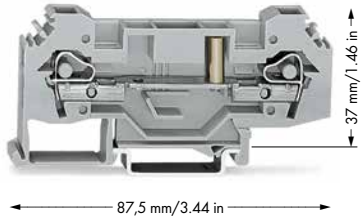

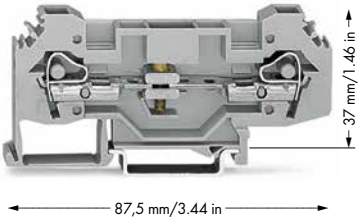

	Item No.	Pack. Unit
Disconnect/test terminal block, with 4 mm Ø test sockets		
gray	**282-131**	25

	Item No.	Pack. Unit
Through terminal block		
gray	**282-133**	25

	Item No.	Pack. Unit
Disconnect/test terminal block, without test sockets		
gray	**282-135**	25

Item-Specific Accessories

Alternate jumper, insulated, I_N 41 A



gray **282-409** 100 (4x25)

Lock-out, prevents reclosing of slide link, snap-on type



orange **282-137** 100 (4x25)

Item-Specific Accessories

Alternate jumper, insulated, I_N 41 A



gray **282-409** 100 (4x25)

Item-Specific Accessories

Alternate jumper, insulated, I_N 41 A



gray **282-409** 100 (4x25)

Lock-out, prevents reclosing of slide link, snap-on type



orange **282-137** 100 (4x25)

282 Series Accessories

Appropriate marking system:
WMB (see Section 13)

End and intermediate plate, 4 mm thick



orange **282-315** 50 (2x25)
gray **282-314** 50 (2x25)

Adjacent jumper, insulated, I_N 41 A



gray **282-402** 100 (4x25)

Protective warning marker, with black high-voltage symbol, for 5 terminal blocks



yellow **282-405** 100 (4x25)

Test plug adapter, 8.3 mm wide, for 4 mm Ø test plug, for 1.5 … 10 mm² terminal blocks



gray **209-170** 50 (2x25)

Screwless end stop, for DIN-35 rail, 6 mm wide



gray **249-116** 100 (4x25)

Screwless end stop, for DIN-35 rail, 10 mm wide



gray **249-117** 50 (2x25)

❷ **B-type test plug module,** snaps together, 8 mm wide



gray **709-310** 100 (4x25)

B-type spacer module, snaps together, 8 mm wide



gray **709-311** 100 (4x25)

10

0.2 … 6 mm² | **24 … 10 AWG**

Terminal block width 16 mm / 0.63 inch
12 … 13 mm / 0.47 … 0.51 inch

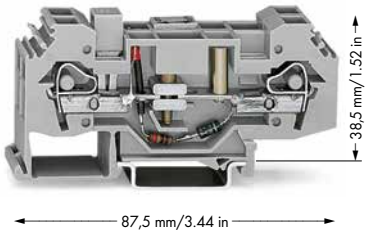

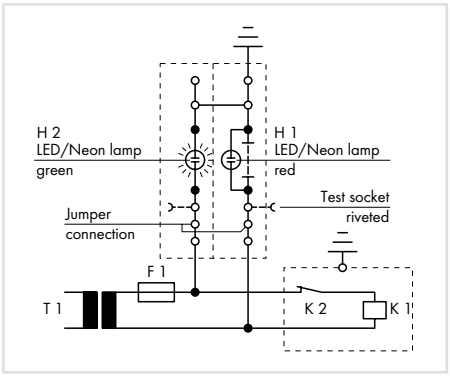

Operating condition
Slide link closed, auxiliary circuit grounded, green LED/neon lamp illuminates.

❶ 400 V = rated voltage
6 kV = rated surge voltage
3 = pollution degree
(also see Section 14)

❷ See application notes for:
Test plug module, page 329

	Item No.	Pack. Unit
Ground conductor disconnect terminal block, gray		
24 V	**282-140**	12
48 V	**282-141**	12
120 V	**282-138**	12
230 V	**282-139**	12

Item-Specific Accessories

Lock-out, prevents reclosing of slide link, snap-on type



orange	**282-137**	100 (4x25)

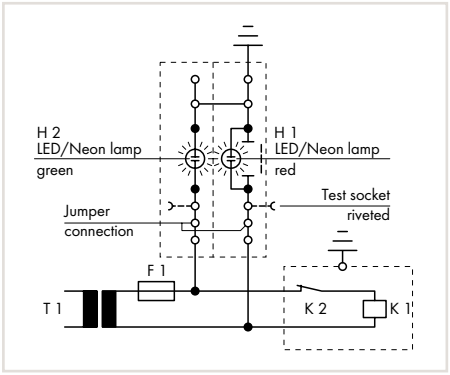

Test condition – no grounding
Slide link open, auxiliary circuit not grounded.

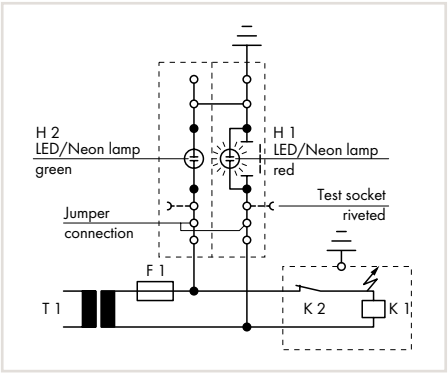

Test condition – grounding
Slide link open, auxiliary circuit not grounded, red LED/neon lamp illuminates.

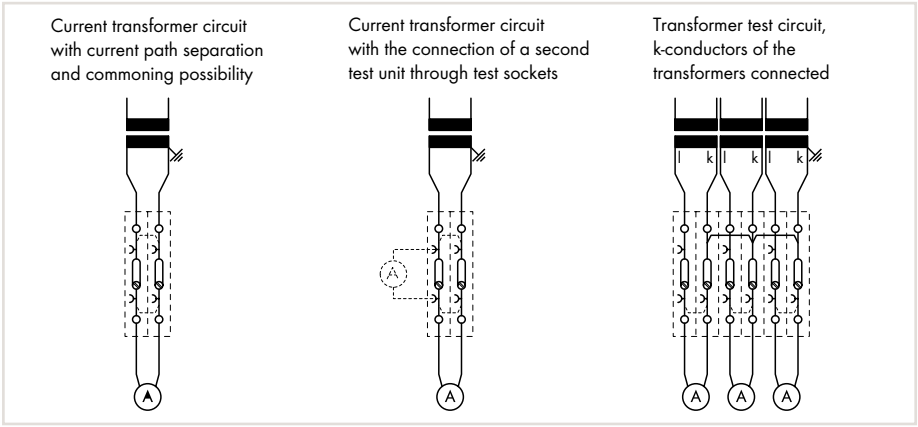

IEC 60204/DIN VDE 0113 "Safety of machinery – Electrical equipment of machines – Part 1: General requirements," Section 9.4.3.1:

Ground faults on control circuits must not cause unintentional starting, hazardous movements, or prevent stopping of the machine.

In order to fulfill this requirement, a connection to the protective bonding circuit must be provided in accordance with Section 8.2 and the devices must be connected as described in Section 9.1.4. Control circuits fed from a transformer and not connected to the protective bonding circuit must be provided with an insulation monitoring device (e.g., residual current device), which either indicates a ground fault or interrupts the circuit automatically after a ground fault.
In the case of electronic circuits, the connection of one side of the control circuit to the protective bonding circuit in accordance with Section 9.1.4 can prevent unintentional operation. When this does not help, or if due to other reasons that electronic circuits cannot be connected to the protective bonding circuit, other measures must be taken to achieve the same level of safety.

Multipole control switches that interrupt all live conductors must be used where the control circuit is directly connected between the phase conductors of the supply or between a phase conductor and a neutral conductor, which is either not grounded or grounded through a high impedance. This is required for starting or stopping those machine functions, which can cause a hazardous situation including: damaging the machine or halting work in progress in the event of unintentional starting or failure to stop.

Fuse Terminal Blocks

6 mm², 282 Series

0.2 ... 6 mm²	24 ... 10 AWG	
500 V/6 kV/3 ❶	600 V, 10 A	
I_N 10 A	250 V, 10 A	
Terminal block width 13 mm / 0.512 inch		
12 ... 13 mm / 0.47 ... 0.51 inch		

0.2 ... 6 mm²	24 ... 10 AWG	
500 V/6 kV/3 ❶		
I_N 10 A	250 V, 10 A	
Terminal block width 13 mm / 0.512 inch		
12 ... 13 mm / 0.47 ... 0.51 inch		

0.2 ... 6 mm²	24 ... 10 AWG	
500 V/6 kV/3 ❶	600 V, 10 A	
I_N 10 A	250 V, 10 A	
Terminal block width 13 mm / 0.512 inch		
12 ... 13 mm / 0.47 ... 0.51 inch		

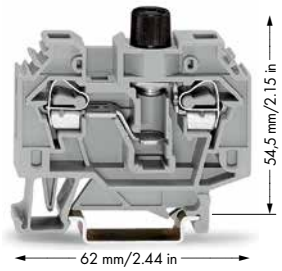





	Item No.	Pack. Unit
2-conductor fuse terminal block, without indicator, for miniature fuses 5 x 20 mm		
gray	**282-122**	40

	Item No.	Pack. Unit
2-conductor fuse terminal block, without indicator, for miniature fuses ¼" x 1"		
gray	**282-120**	40
2-conductor fuse terminal block, without indicator, for miniature fuses ¼" x 1¼"		
gray	**282-128**	40

	Item No.	Pack. Unit
2-conductor fuse terminal block, with indicator, for miniature fuses		
gray	**282-126**	40

Item-Specific Accessories

Miniature fuse, 5 x 20 mm, without indicator, 6.3 A/250 V, medium/slow



282-451 100

Item-Specific Accessories

Miniature fuse, ¼" x 1", without indicator, 10 A/240 V, to BS 1362



282-458 200 (20x10)

Miniature fuse, ¼" x 1¼", without indicator, 10 A/250 V, medium/slow



282-457 200 (2x100)

Miniature fuse, ¼" x 1¼", without indicator, 10 A/500 V, very fast acting



282-454 200 (20x10)

Item-Specific Accessories

Miniature fuse, 5 x 25 mm, with indicator, 6.3 A, medium/slow



282-452 200 (20x10)

Miniature fuse, 5 x 25 mm, with indicator, 10 A, fast acting



282-453 200 (20x10)

Accessories for Fuse Terminal Blocks

Appropriate marking system:
WMB (see Section 13)

End and intermediate plate, 4 mm thick



orange **282-312** 50 (2x25)
gray **282-311** 50 (2x25)

Adjacent jumper, insulated, I_N 41 A



gray **282-402** 100 (4x25)

Protective warning marker, with black high-voltage symbol, for 5 terminal blocks



yellow **282-405** 100 (4x25)

Test plug adapter, 8.3 mm wide, for 4 mm Ø test plug, for 1.5 ... 10 mm² terminal blocks

gray **209-170** 50 (2x25)

Test plug adapter, 6 mm wide, with CAGE CLAMP®, for 0.08 ... 2.5 mm²



I_N 24 A **281-407** 100 (4x25)

Plunger, for 281, 282, 283 and 284 Series rail-mount terminal blocks for side-entry



210-141 1

0.2 … 6 mm² | 24 … 10 AWG	0.2 … 6 mm² | 24 … 10 AWG
Terminal block width 13 mm / 0.512 inch 12 … 13 mm / 0.47 … 0.51 inch	Terminal block width 13 mm / 0.512 inch 12 … 13 mm / 0.47 … 0.51 inch



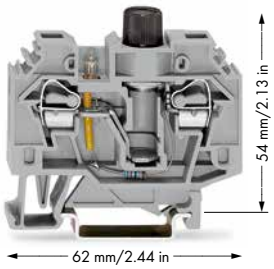

❶ 500 V = rated voltage
6 kV = rated surge voltage
3 = pollution degree
(also see Section 14)
Electrical ratings are given by the fuse or LED nominal voltage (see page 292).

Item No.		Pack. Unit
2-conductor fuse terminal block, with red LED, 24 VDC, for miniature fuses ¼" x 1¼"		
gray	**282-128/281-413**	40

Item No.		Pack. Unit
2-conductor fuse terminal block, with neon lamp 250 VAC/220 VDC, for miniature fuses ¼" x 1¼"		
gray	**282-128/281-417**	40
2-conductor fuse terminal block, with neon lamp 250 VAC/220 VDC, for miniature fuses 5 x 20 mm		
gray	**282-124**	40
2-conductor fuse terminal block, with neon lamp 120 V AC/DC, for miniature fuses ¼" x 1¼"		
gray	**282-128/281-418**	40

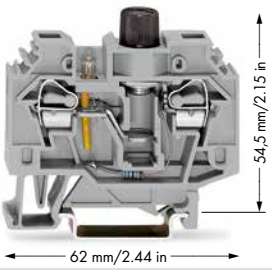

Dimensions
Item No. 282-124

Item-Specific Accessories

Miniature fuse, ¼" x 1¼", without indicator, 10 A/250 V, medium/slow	**282-457**	200 (2x100)
Miniature fuse, ¼" x 1¼", without indicator, 10 A/500 V, very fast acting	**282-454**	200 (20x10)

Item-Specific Accessories

Miniature fuse, 5 x 20 mm, without indicator, 6.3 A/250 V, medium/slow	**282-451**	100
Miniature fuse, ¼" x 1¼", without indicator, 10 A/250 V, medium/slow	**282-457**	200 (2x100)
Miniature fuse, ¼" x 1¼", without indicator, 10 A/500 V, very fast acting	**282-454**	200 (20x10)

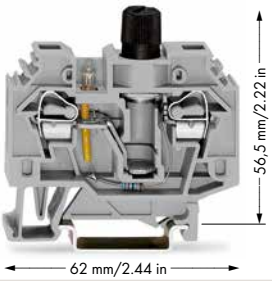

Dimensions
Item No. 282-128/281-418

10

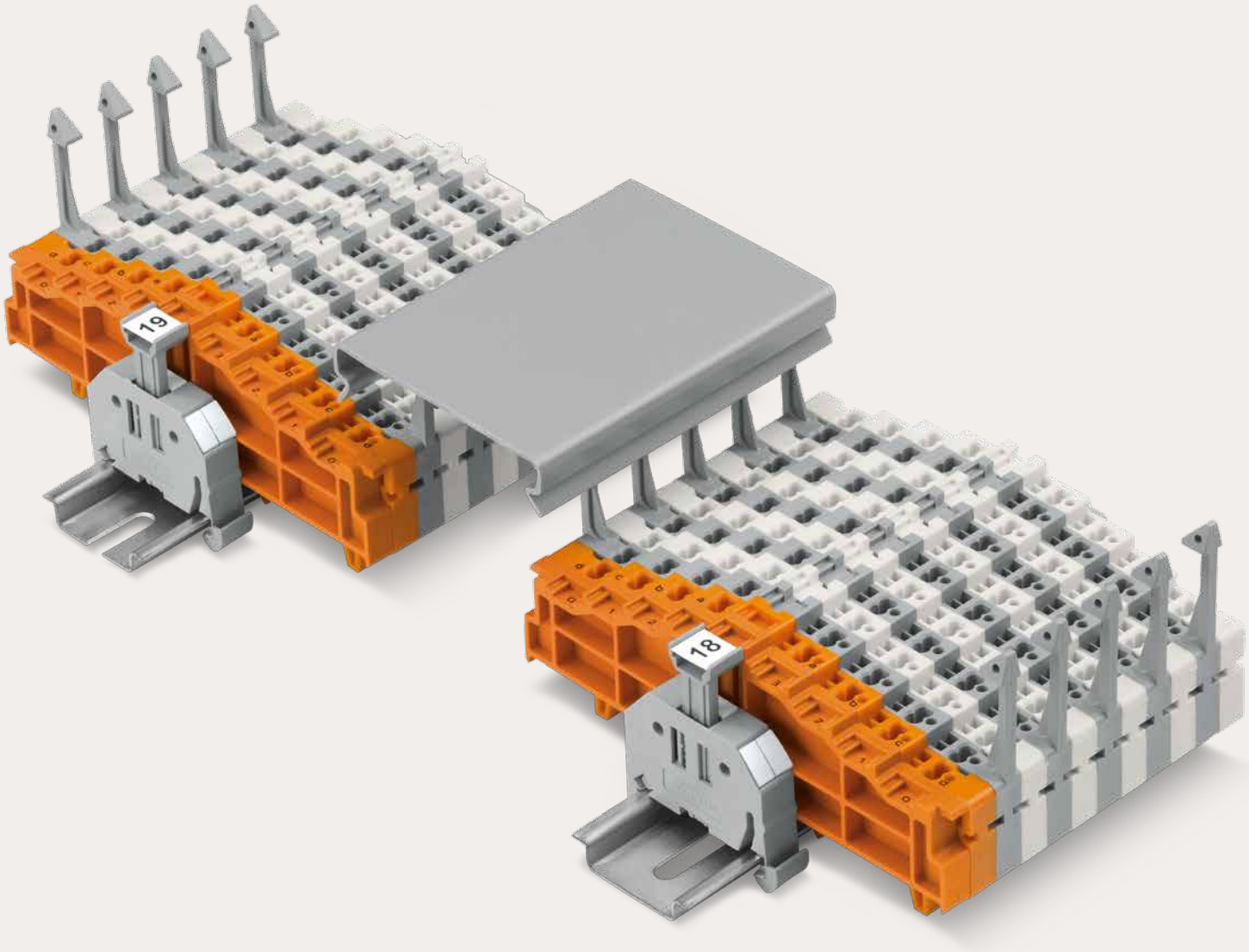

Terminal Blocks for Matrix Patching and Potential Distribution

CAGE CLAMP®

Terminal Blocks for Matrix Patching and Potential Distribution, Busbar Terminal Blocks

			Page
	**Matrix Patchboards**	726 Series	502
	**Common Potential Matrix Patchboards** **Marking on the Patchboard Side** **Marking on the Supply Side**	726 Series	506
	**Matrix Patchboard Accessories**		510
	**Terminal Blocks for Matrix Patching and Common Potential Terminal Blocks** 1.5 mm² (16 AWG)	727 Series	514
	**3-Conductor, Double-Potential Terminal Blocks** 2.5 mm² (12 AWG)	280 Series	519
	**Busbar Terminal Blocks**	812 Series	521

11

Matrix Patchboards, 726 Series

Description and Installation

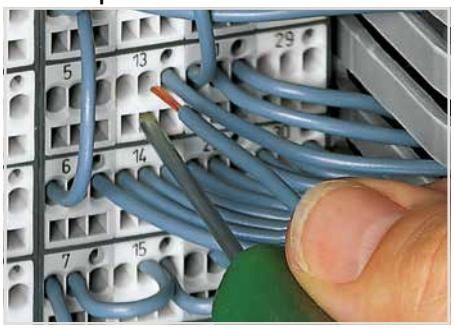

CAGE CLAMP® connection
Inserting a conductor via 210-719 Operating Tool (2.5 x 0.4 mm blade).



Factory-marked modules
Side 1: 1, 2, 3, 4 ...

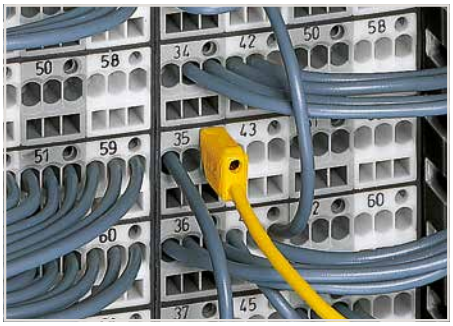

Testing with a 2.3 mm Ø test plug (210-137).

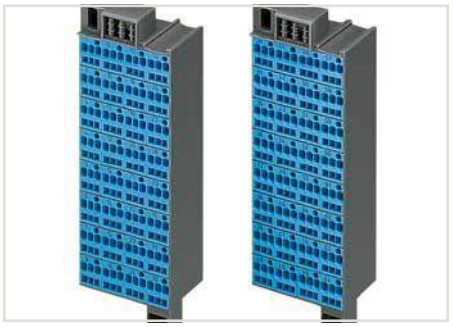

Blue matrix patchboards are suitable for Ex i applications.

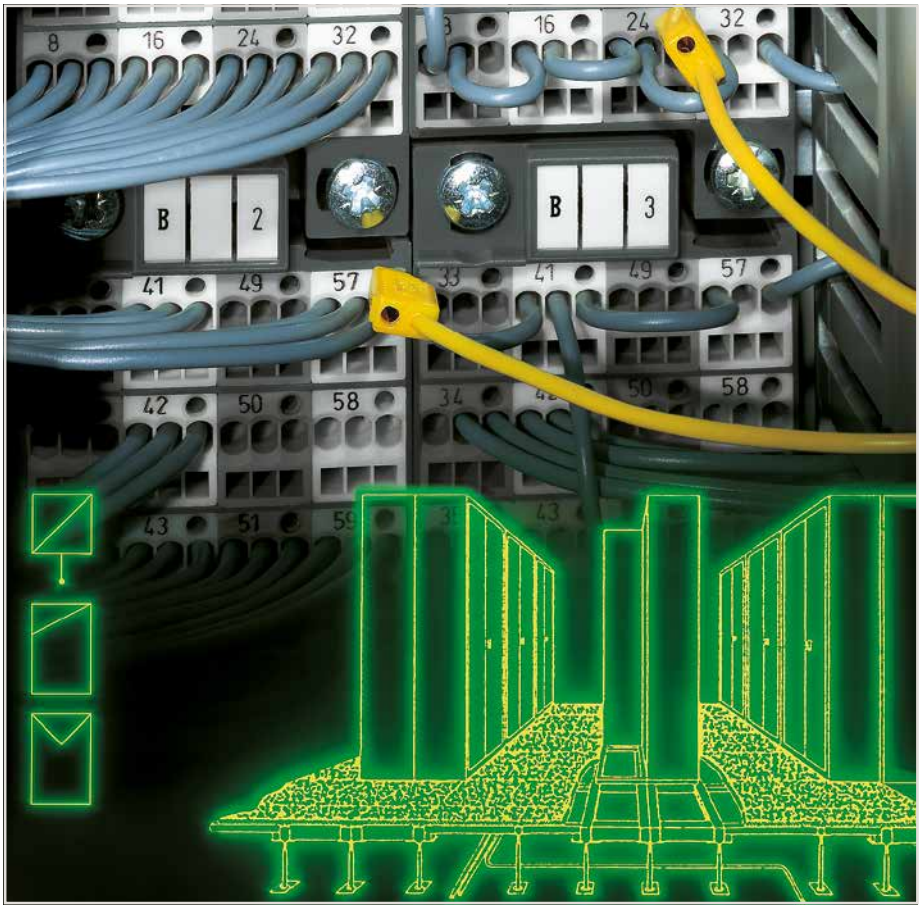



WFB continuous marking strip – fits into the matrix patchboards' marker slot and group marker carrier.



Individual group marking via WSB Quick Marking System.



Installation example:
Matrix patchboards in a frame



Installation example:
Matrix patchboards in a 19" rack



CAGE CLAMP® terminates the following copper conductors:
solid



stranded



fine-stranded, also with tinned single strands

For aluminum conductors, see notes in Section 14.



Saving space via slimline matrix patchboard (lower right), mounted upside down.





Snapping on an additional module with contact to mounting frame.



Assembling a matrix patchboard with additional module – direct connection to the mounting frame.

	Max. conductor cross section (mm²/AWG) without ferrule	Max. conductor cross section (mm²/AWG) with ferrule			
		insulated		uninsulated	
			Item No./Color		Item No.
Side 2	1.5	0.75	**216-202**/gray	1	**216-123**
Side 1	1.5	0.75	**216-202**/gray	1	**216-123**
Side 2	2.5	1.5	**216-204**/black	1.5	**216-104**
Side 1	1.5	0.75	**216-202**/gray	1	**216-123**

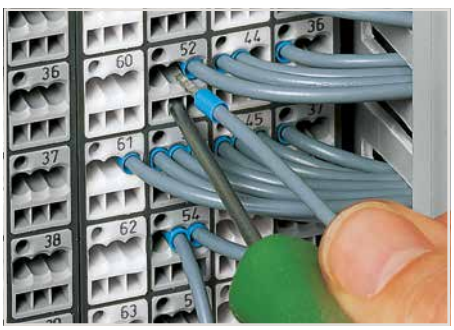

Terminating ferruled conductors via operating tool.



fine-stranded, tip-bonded



fine-stranded, with ferrule (gastight crimped)



fine-stranded, with pin terminal (gastight crimped)

Matrix Patchboards, 32-Pole

726 Series

Side 1: 3x 0.08 … 1.5 mm²	28 … 16 AWG	Side 1: 3x 0.08 … 1.5 mm²	28 … 16 AWG
Side 2: 3x 0.08 … 1.5 mm²	28 … 16 AWG	Side 2: 2x 0.08 … 2.5 mm²	28 … 14 AWG
500 V/6 kV/3 ❶	300 V, 10 A	500 V/6 kV/3 ❶	300 V, 10 A
I_N 10 A	300 V, 10 A	I_N 10 A	300 V, 10 A
8 … 10 mm / 0.31 … 0.39 inch		8 … 10 mm / 0.31 … 0.39 inch	





❶ 500 V = rated voltage
6 kV = rated surge voltage
3 = pollution degree
(see Section 14)

❷ Suitable for Ex i applications

❸ See application notes for:
Decade marker carrier, page 510
Insulation stop, page 511

Item No.		Pack. Unit
Matrix patchboard, dark gray frame, colors of modules: gray/white, numbering of modules on sides 1 and 2 arranged vertically and horizontally		
marking 1 … 32	**726-121**	20
marking 33 … 64	**726-122**	20
Matrix patchboard, dark gray frame, colors of modules: blue, numbering of modules on sides 1 and 2 arranged vertically and horizontally		
marking 1-32	**726-141** ❷	20
marking 33-64	**726-142** ❷	20

Item No.		Pack. Unit
Matrix patchboard, dark gray frame, colors of modules: gray/white, numbering of modules on sides 1 and 2 arranged vertically and horizontally		
marking 1 … 32	**726-221**	20
marking 33 … 64	**726-222**	20
Matrix patchboard, dark gray frame, colors of modules: blue, numbering of modules on sides 1 and 2 arranged vertically and horizontally		
marking 1-32	**726-241** ❷	20
marking 33-64	**726-242** ❷	20

Matrix Patchboard Accessories

Insulation stop, 4 x 3 pcs/strip, 0.08 … 0.2 mm² "s" (0.14 mm² "f-st") ❸			
white	**726-901**	200 (8x25)	
Insulation stop, 4 x 3 pcs/strip, 0.25 mm² "s" 0.14 … 0.25 mm² "f-st" ❸			
light gray	**726-906**	200 (8x25)	

Insulation stop, 4 x 3 pcs/strip, 0.25 … 0.5 mm² "s+f-st" ❸			
dark gray	**726-907**	200 (8x25)	
Test plug, with 500 mm cable, 2.3 mm Ø, max. 42 V			
yellow	**210-137**	50	

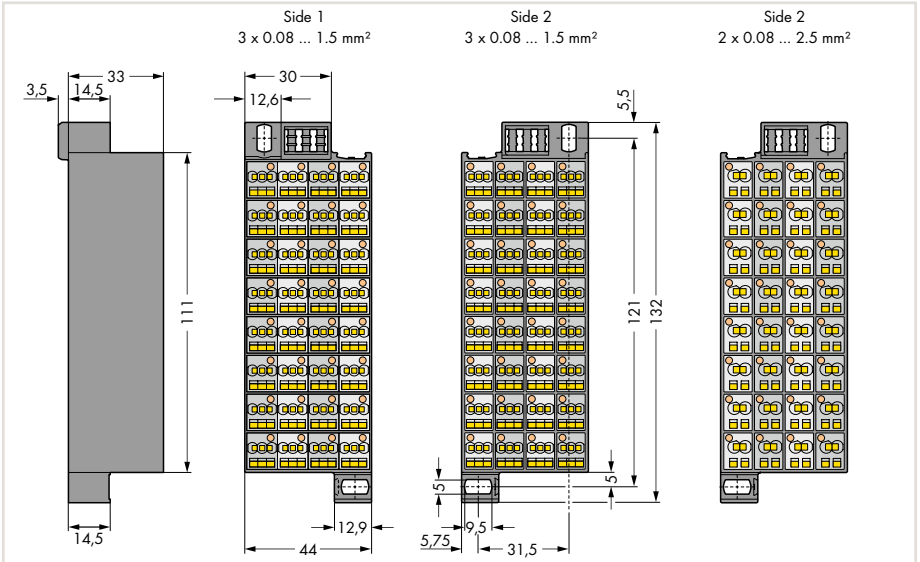

Dimensions in mm

Matrix Patchboard Accessories

Wire commoning chain, insulated, 31 connections, I_N 6 A, max. 50 V, 0.5 mm²			
gray	**709-107**	1	
Group marking carrier for side 2			
dark gray	**726-902**	50	
WFB continuous marking strip, 1000 mm long			
transparent	**210-612**	10	
Carrier for WFB continuous marking strip, snaps into marker slot			
	209-185	200 (8x25)	
WSB Quick marking system, white, 10 strips with 10 markers per card, for terminal widths 5 … 17.5 mm			
plain	**209-501**	5	
WSB Quick marking system, white, 10 strips with 10 markers per card, horizontal marking			
1 … 10 (10x)	**209-502**	5	
WSB Quick marking system, white, 10 strips with 10 markers per card, horizontal marking			
1 … 50 (2x)	**209-566**	5	
WSB Quick marking system, white, 10 strips with 10 markers per card, horizontal marking			
X (100x)	**209-500/209-035**	5	
Decade marker carrier, for matrix patchboards ❸			
dark gray	**726-905**	10	
Operating tool with a partially insulated shaft, type 1, (2.5 x 0.4) mm blade			
	210-719	1	

Matrix Patchboards, 48-Pole

726 Series

Side 1: 3x 0.08 … 1.5 mm²	28 … 16 AWG	Side 1: 3x 0.08 … 1.5 mm²	28 … 16 AWG
Side 2: 3x 0.08 … 1.5 mm²	28 … 16 AWG	Side 2: 2x 0.08 … 2.5 mm²	28 … 14 AWG
500 V/6 kV/3 ❶	300 V, 10 A	500 V/6 kV/3 ❶	300 V, 10 A
I_N 10 A	300 V, 10 A	I_N 10 A	300 V, 10 A
8 … 10 mm / 0.31 … 0.39 inch		8 … 10 mm / 0.31 … 0.39 inch	



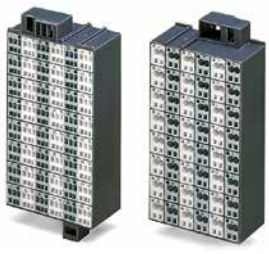

❶ 500 V = rated voltage
6 kV = rated surge voltage
3 = pollution degree
(see Section 14)

❷ Suitable for Ex i applications

❸ See application notes for:
Decade marker carrier, page 510
Insulation stop, page 511

Item No.		Pack. Unit
Matrix patchboard, dark gray frame, colors of modules: gray/white, numbering of modules on sides 1 and 2 arranged vertically and horizontally		
marking 1 … 48	**726-421**	10
Matrix patchboard, dark gray frame, colors of modules: blue, numbering of modules on sides 1 and 2 arranged vertically and horizontally		
marking 1 … 48	**726-441** ❷	10

Item No.		Pack. Unit
Matrix patchboard, dark gray frame, colors of modules: gray/white, numbering of modules on sides 1 and 2 arranged vertically and horizontally		
marking 1 … 48	**726-521**	10
Matrix patchboard, dark gray frame, colors of modules: blue, numbering of modules on sides 1 and 2 arranged vertically and horizontally		
marking 1 … 48	**726-541** ❷	10

Matrix Patchboard Accessories

Item No.		Pack. Unit
Insulation stop, 4 x 3 pcs/strip, 0.08 … 0.2 mm² "s" (0.14 mm² "f-st") ❸		
white	**726-901**	200 (8x25)
Insulation stop, 4 x 3 pcs/strip, 0.25 mm² "s" 0.14 … 0.25 mm² "f-st" ❸		
light gray	**726-906**	200 (8x25)
Insulation stop, 4 x 3 pcs/strip, 0.25 … 0.5 mm² "s+f-st" ❸		
dark gray	**726-907**	200 (8x25)

Item No.		Pack. Unit
Test plug, with 500 mm cable, 2.3 mm Ø, max. 42 V		
yellow	**210-137**	50
Wire commoning chain, insulated, 31 connections, I_N 6 A, max. 50 V, 0.5 mm²		
gray	**709-107**	1
Group marking carrier for side 2		
dark gray	**726-902**	50

Matrix Patchboard Accessories

WFB continuous marking strip, 1000 mm long		
transparent	**210-612**	10
Carrier for WFB continuous marking strip, snaps into marker slot		
	209-185	200 (8x25)
WSB Quick marking system, white, 10 strips with 10 markers per card, for terminal widths 5 … 17.5 mm		
plain	**209-501**	5
WSB Quick marking system, white, 10 strips with 10 markers per card, horizontal marking		
1 … 10 (10x)	**209-502**	5
WSB Quick marking system, white, 10 strips with 10 markers per card, horizontal marking		
1 … 50 (2x)	**209-566**	5
WSB Quick marking system, white, 10 strips with 10 markers per card, horizontal marking		
X (100x)	**209-500/209-035**	5
Decade marker carrier, for matrix patchboards ❸		
dark gray	**726-905**	10
Operating tool with a partially insulated shaft, type 1, (2.5 x 0.4) mm blade		
	210-719	1

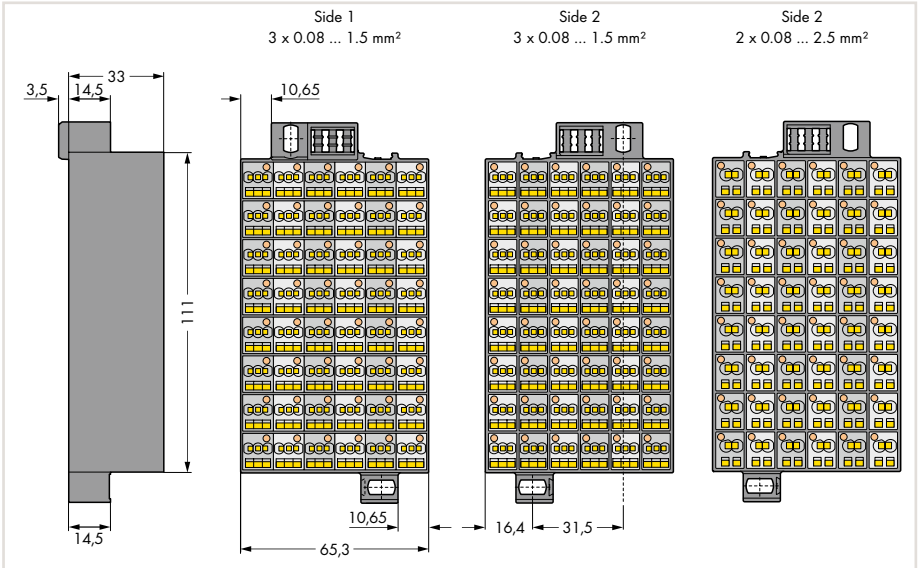

Dimensions in mm

11

Matrix Patchboards, 80-Pole

726 Series

Side 1: 3x 0.08 … 1.5 mm²	28 … 16 AWG
Side 2: 3x 0.08 … 1.5 mm²	28 … 16 AWG
500 V/6 kV/3 ❶	300 V, 10 A
I_N 10 A	300 V, 10 A
8 … 10 mm / 0.31 … 0.39 inch	

Side 1: 3x 0.08 … 1.5 mm²	28 … 16 AWG
Side 2: 2x 0.08 … 2.5 mm²	28 … 14 AWG
500 V/6 kV/3 ❶	300 V, 10 A
I_N 10 A	300 V, 10 A
8 … 10 mm / 0.31 … 0.39 inch	



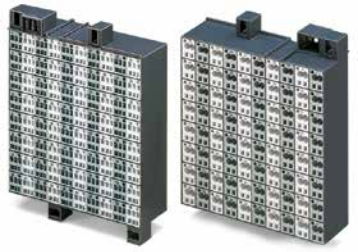

❶ 500 V = rated voltage
6 kV = rated surge voltage
3 = pollution degree
(see Section 14)

❷ Suitable for Ex i applications

❸ See application notes for:
Decade marker carrier, page 510
Insulation stop, page 511

Item No.		Pack. Unit
Matrix patchboard, dark gray frame, gray/white modules, vertical module marking on sides 1 and 2, 80-pole		
marking 1 … 80	**726-721**	8
Matrix patchboard, dark gray frame, blue modules, vertical module marking on sides 1 and 2, 80-pole		
marking 1 … 80	**726-741** ❷	8

Item No.		Pack. Unit
Matrix patchboard, dark gray frame, gray/white modules, vertical module marking on sides 1 and 2, 80-pole		
marking 1 … 80	**726-821**	8
Matrix patchboard, dark gray frame, blue modules, vertical module marking on sides 1 and 2, 80-pole		
marking 1 … 80	**726-841** ❷	8

Matrix Patchboard Accessories

Insulation stop, 4 x 3 pcs/strip, 0.08 … 0.2 mm² "s" (0.14 mm² "f-st") ❸			
white	**726-901**	200 (8x25)	
Insulation stop, 4 x 3 pcs/strip, 0.25 mm² "s" 0.14 … 0.25 mm² "f-st" ❸			
light gray	**726-906**	200 (8x25)	
Insulation stop, 4 x 3 pcs/strip, 0.25 … 0.5 mm² "s+f-st" ❸			
dark gray	**726-907**	200 (8x25)	

WFB continuous marking strip, 1000 mm long		
transparent	**210-612**	10
Carrier for WFB continuous marking strip, snaps into marker slot		
	209-185	200 (8x25)
WSB Quick marking system, white, 10 strips with 10 markers per card, for terminal widths 5 … 17.5 mm		
plain	**209-501**	5

Matrix Patchboard Accessories

WSB Quick marking system, white, 10 strips with 10 markers per card, horizontal marking		
1 … 10 (10x)	**209-502**	5
WSB Quick marking system, white, 10 strips with 10 markers per card, horizontal marking		
1 … 50 (2x)	**209-566**	5
WSB Quick marking system, white, 10 strips with 10 markers per card, horizontal marking		
X (100x)	**209-500/209-035**	5
Decade marker carrier, for matrix patchboards ❸		
dark gray	**726-905**	10
Operating tool with a partially insulated shaft, type 1, (2.5 x 0.4) mm blade		
	210-719	1

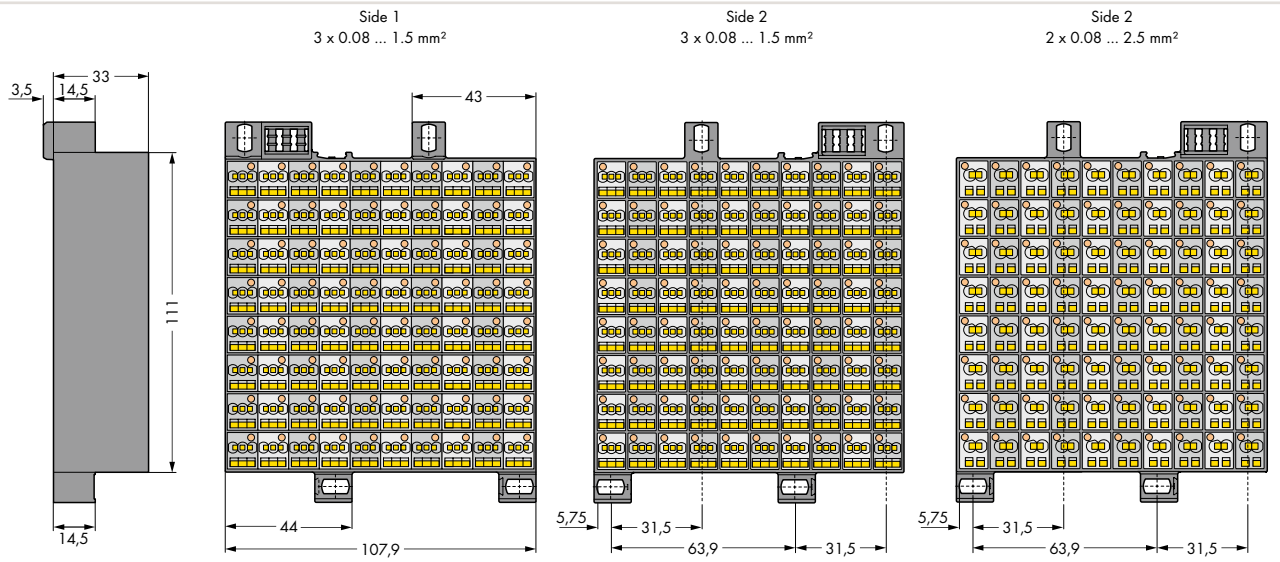

Dimensions in mm

Matrix Patchboards, 32-Pole – Slimline Version, for 19" Racks

726 Series

Side 1: 2x 0.08 … 1.5 mm²	28 … 16 AWG
Side 2: 2x 0.08 … 1.5 mm²	28 … 16 AWG
500 V/6 kV/3 ❶	300 V, 10 A
I_N 10 A	300 V, 10 A
8 … 10 mm / 0.31 … 0.39 inch	

Side 1: 2x 0.08 … 1.5 mm²	28 … 16 AWG
Side 2: 2x 0.08 … 1.5 mm²	28 … 16 AWG
500 V/6 kV/3 ❶	300 V, 10 A
I_N 10 A	300 V, 10 A
8 … 10 mm / 0.31 … 0.39 inch	





❶ 500 V = rated voltage
6 kV = rated surge voltage
3 = pollution degree
(see Section 14)

❷ Suitable for Ex i applications

❸ See application notes for:
Decade marker carrier, page 510
Insulation stop, page 511

Item No.		Pack. Unit
Matrix patchboard, dark gray frame, gray/white modules, vertical module marking on sides 1 and 2, for 19" racks, slimline version, 32-pole		
marking 1-32	**726-321**	24
marking 33-64	**726-322**	24
Matrix patchboard, dark gray frame, blue modules, vertical module marking on sides 1 and 2, for 19" racks, slimline version, 32-pole		
marking 1-32	**726-341** ❷	24
marking 33-64	**726-342** ❷	24

Item No.		Pack. Unit
Matrix patchboard, dark gray frame, gray/white modules, vertical module marking on sides 1 and 2, for 19" racks, mounted upside down, slimline version, 32-pole		
marking 1-32	**726-325**	24
marking 33-64	**726-326**	24
Matrix patchboard, dark gray frame, blue modules, vertical module marking on sides 1 and 2, for 19" racks, mounted upside down, slimline version, 32-pole		
marking 1-32	**726-345** ❷	24
marking 33-64	**726-346** ❷	24

Matrix Patchboard Accessories

Insulation stop, 4 x 3 pcs/strip, 0.08 … 0.2 mm² "s" (0.14 mm² "f-st") ❸



white **726-901** 200 (8x25)

Insulation stop, 4 x 3 pcs/strip, 0.25 mm² "s" 0.14 … 0.25 mm² "f-st" ❸



light gray **726-906** 200 (8x25)

Insulation stop, 4 x 3 pcs/strip, 0.25 … 0.5 mm² "s+f-st" ❸



dark gray **726-907** 200 (8x25)

WFB continuous marking strip, 1000 mm long

transparent **210-612** 10

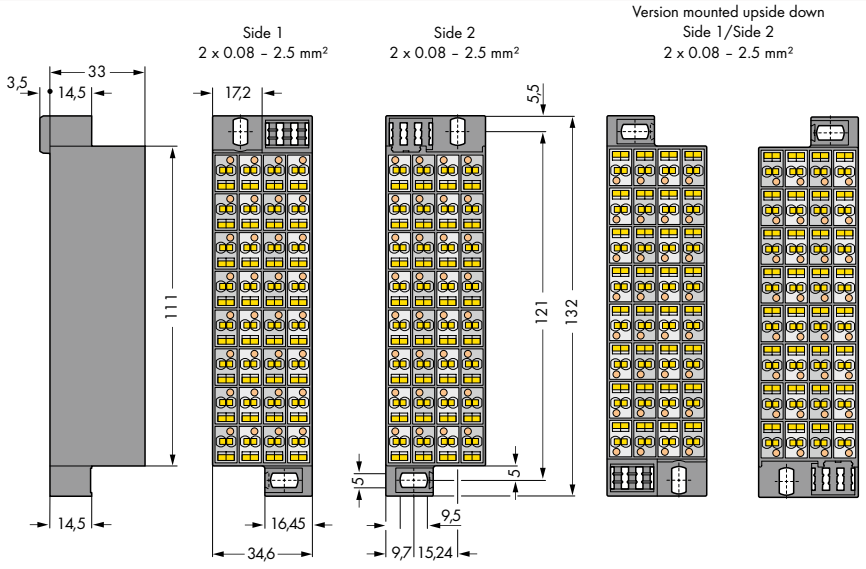

Dimensions in mm

Matrix Patchboard Accessories

Carrier for WFB continuous marking strip, snaps into marker slot



209-185 200 (8x25)

WSB Quick marking system, white, 10 strips with 10 markers per card, for terminal widths 5 … 17.5 mm



plain **209-501** 5

WSB Quick marking system, white, 10 strips with 10 markers per card, horizontal marking



1 … 10 (10x) **209-502** 5

WSB Quick marking system, white, 10 strips with 10 markers per card, horizontal marking



1 … 50 (2x) **209-566** 5

WSB Quick marking system, white, 10 strips with 10 markers per card, horizontal marking



X (100x) **209-500/209-035** 5

Decade marker carrier, for matrix patchboards ❸



dark gray **726-905** 10

Operating tool with a partially insulated shaft, type 1, (2.5 x 0.4) mm blade



210-719 1

11

CAGE CLAMP®

Common Potential Matrix Patchboards – Slimline Version, for 19" Racks

726 Series

Side 1: I_N 24 A **24x 2x 0.08 … 2.5 mm² | 28 … 14 AWG** **8 … 10 mm / 0.31 … 0.39 inch** **Side 2: I_N 76 A** **1x or 2x 0.5 … 16 (25"f-st")mm² | 20 … 4 AWG** **16 … 17 mm / 0.63 … 0.67 inch**	**Side 1: I_N 24 A** **24x 2x 0.08 … 2.5 mm² | 28 … 14 AWG** **8 … 10 mm / 0.31 … 0.39 inch** **Side 2: I_N 76 A** **1x or 2x 0.5 … 16 (25"f-st")mm² | 20 … 4 AWG** **16 … 17 mm / 0.63 … 0.67 inch**	**Side 1: I_N 24 A** **24x 2x 0.08 … 2.5 mm² | 28 … 14 AWG** **8 … 10 mm / 0.31 … 0.39 inch** **Side 2: I_N 76 A** **1x or 2x 0.5 … 16 (25"f-st")mm² | 20 … 4 AWG** **16 … 17 mm / 0.63 … 0.67 inch**



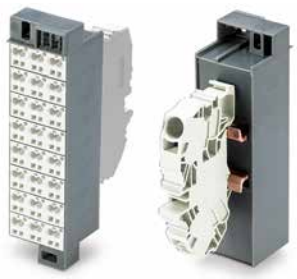



Item No.	Pack. Unit
Common potential matrix patchboard, marking 1 … 24, dark gray frame, gray modules, vertical module marking, with one supply terminal block incl. end plate, for 19" racks, slimline version	
726-601	10
Common potential matrix patchboard, marking 1 … 24, dark gray frame, gray modules, vertical module marking, with two supply terminal blocks incl. end plate, for 19" racks, slimline version	
726-602	10

Item No.	Pack. Unit
Common potential matrix patchboard, marking 1 … 24, dark gray frame, white modules, vertical module marking, with one supply terminal block incl. end plate, for 19" racks, slimline version	
726-611	10
Common potential matrix patchboard, marking 1 … 24, dark gray frame, white modules, vertical module marking, with two supply terminal blocks incl. end plate, for 19" racks, slimline version	
726-612	10

Item No.	Pack. Unit
Ground conductor common potential matrix patchboard, marking 1 … 24, dark gray frame, green-yellow modules, vertical module marking, with one supply terminal block incl. end plate, for 19" racks, slimline version	
726-621	10
Ground conductor common potential matrix patchboard, marking 1 … 24, dark gray frame, green-yellow modules, vertical module marking, with two supply terminal blocks incl. end plate, for 19" racks, slimline version	
726-622	10

Item-Specific Accessories

Spare supply terminal block, only for use with common potential matrix patchboards, 16 mm², 12 mm wide			
gray	**2016-7611**	20	
End and intermediate plate, 1 mm thick			
gray	**2016-7691**	100 (4x25)	
Operating tool with a partially insulated shaft, type 3, (5.5 x 0.8) mm blade			
	210-721	1	

Item-Specific Accessories

Spare supply terminal block, only for use with common potential matrix patchboards, 16 mm², 12 mm wide			
white	**2016-7608**	20	
End and intermediate plate, 1 mm thick			
gray	**2016-7691**	100 (4x25)	
Operating tool with a partially insulated shaft, type 3, (5.5 x 0.8) mm blade			
	210-721	1	

Item-Specific Accessories

Ground supply terminal block, 16 mm², 12 mm wide			
green-yellow	**2016-7607**	20	
End and intermediate plate, 1 mm thick			
gray	**2016-7691**	100 (4x25)	
Operating tool with a partially insulated shaft, type 3, (5.5 x 0.8) mm blade			
	210-721	1	

11

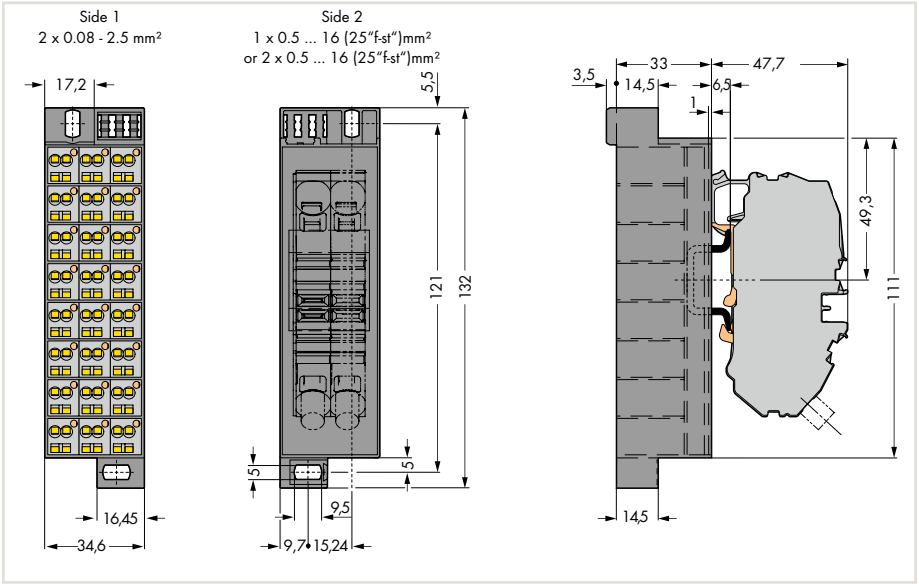

Dimensions in mm

Overview of certification organizations, see page 654

CAGE CLAMP®

Common Potential Matrix Patchboards – Slimline Version, for 19" Racks, Supply Side/Patchboard Side

726 Series

Side 1: I_N 76 A **1x or 2x 0.5 … 16 (25"f-st")mm² | 20 … 4 AWG** **16 … 17 mm / 0.63 … 0.67 inch** **Side 2: I_N 24 A** **24x 2x 0.08 … 2.5 mm² | 28 … 14 AWG** **8 … 10 mm / 0.31 … 0.39 inch**	**Side 1: I_N 76 A** **1x or 2x 0.5 … 16 (25"f-st")mm² | 20 … 4 AWG** **16 … 17 mm / 0.63 … 0.67 inch** **Side 2: I_N 24 A** **24x 2x 0.08 … 2.5 mm² | 28 … 14 AWG** **8 … 10 mm / 0.31 … 0.39 inch**	**Side 1: I_N 76 A** **1x or 2x 0.5 … 16 (25"f-st")mm² | 20 … 4 AWG** **16 … 17 mm / 0.63 … 0.67 inch** **Side 2: I_N 24 A** **24x 2x 0.08 … 2.5 mm² | 28 … 14 AWG** **8 … 10 mm / 0.31 … 0.39 inch**







Item No.	Pack. Unit	Item No.	Pack. Unit	Item No.	Pack. Unit
Common potential matrix patchboard, dark gray frame, with 1 input module incl. end plate, colors of modules: gray, numbering of modules arranged vertically, marking 1 … 24		Common potential matrix patchboard, dark gray frame, with 1 input module incl. end plate, colors of modules: white, numbering of modules arranged vertically, marking 1 … 24		Common potential matrix patchboard for ground conductor, dark gray frame, with 1 input module incl. end plate, colors of modules: green-yellow, numbering of modules arranged vertically, marking 1 … 24	
726-651	10	**726-661**	10	**726-671**	10
Common potential matrix patchboard, dark gray frame, with 2 input modules incl. end plate, colors of modules: gray, numbering of modules arranged vertically, marking 1 … 24		Common potential matrix patchboard, dark gray frame, with 2 input modules incl. end plate, colors of modules: white, numbering of modules arranged vertically, marking 1 … 24		Common potential matrix patchboard for ground conductor, dark gray frame, with 2 input modules incl. end plate, colors of modules: green-yellow, numbering of modules arranged vertically, marking 1 … 24	
726-652	10	**726-662**	10	**726-672**	10
Item-Specific Accessories		**Item-Specific Accessories**		**Item-Specific Accessories**	
Spare supply terminal block, only for use with common potential matrix patchboards, 16 mm², 12 mm wide		Spare supply terminal block, only for use with common potential matrix patchboards, 16 mm², 12 mm wide		Ground supply terminal block, 16 mm², 12 mm wide	
gray **2016-7611**	20	white **2016-7608**	20	green-yellow **2016-7607**	20
End and intermediate plate, 1 mm thick		End and intermediate plate, 1 mm thick		End and intermediate plate, 1 mm thick	
gray **2016-7691**	100 (4x25)	gray **2016-7691**	100 (4x25)	gray **2016-7691**	100 (4x25)
Operating tool with a partially insulated shaft, type 3, (5.5 x 0.8) mm blade		Operating tool with a partially insulated shaft, type 3, (5.5 x 0.8) mm blade		Operating tool with a partially insulated shaft, type 3, (5.5 x 0.8) mm blade	
210-721	1	**210-721**	1	**210-721**	1

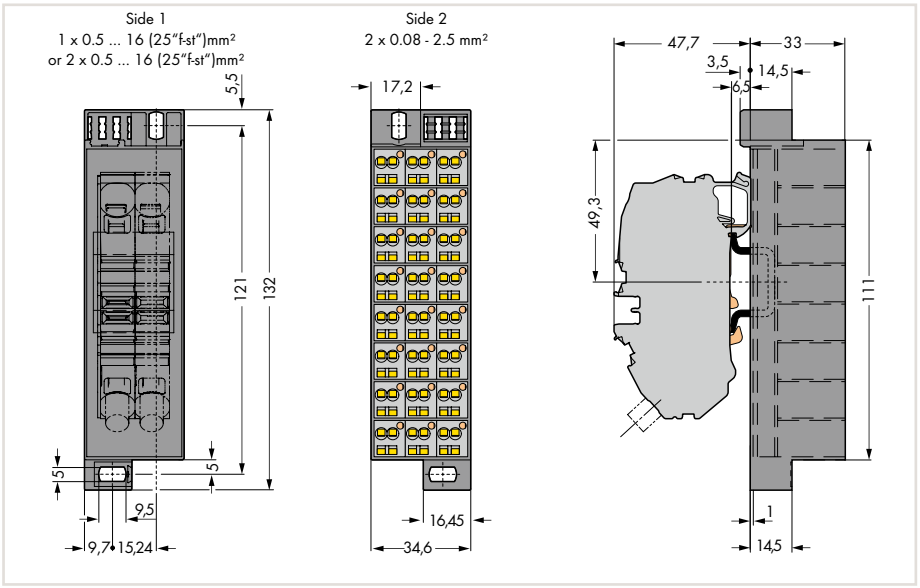

Dimensions in mm

11

Matrix Patchboards with Push-Buttons, 32-Pole — Slimline Version, for 19" Racks

726 Series

Side 1: 32 x 0.08 ... 1.5 mm² | 28 ... 16 AWG Side 2: 32 x 0.08 ... 1.5 mm² | 28 ... 16 AWG 500 V/6 kV/3 ❶ I_N 10 A 10 mm / 0.39 inch	Side 1: 32 x 0.08 ... 1.5 mm² | 28 ... 16 AWG Side 2: 32 x 0.08 ... 1.5 mm² | 28 ... 16 AWG 500 V/6 kV/3 ❶ I_N 10 A 10 mm / 0.39 inch





❶ 800 V = rated voltage
8 kV = rated surge voltage
3 = pollution degree
(see Section 14)

❷ See application notes for:
Decade marker carrier, page 510

	Item No.	Pack. Unit
Matrix patchboard, dark gray frame, gray/white modules, vertical module marking on sides 1 and 2, for 19" racks		
without marking	**726-770**	20

	Item No.	Pack. Unit
Matrix patchboard, dark gray frame, gray/white modules, vertical module marking on sides 1 and 2, for 19" racks		
Marking 1 ... 32	**726-771**	20

Matrix Patchboard Accessories

Wire commoning chain, insulated, 31 connections, I_N 6 A, max. 50 V, 0.5 mm²		
gray	**709-107**	1
WMB Inline, plain, 1,500 WMB markers (5 mm) per reel, 5 ... 5.2 mm stretchable		
white	**2009-115**	1
Marking strip, plain, 11 mm wide, 50 m reel		
white	**2009-110**	1
WMB Multi marking system, white, 10 strips with 10 markers per card, 5 ... 5.2 mm stretchable		
plain	**793-5501**	5
WMB Multi marking system, plain, 10 strips with 10 markers per card, 5 ... 5.2 mm stretchable		
yellow	**793-5501/000-002**	
red	**793-5501/000-005**	
blue	**793-5501/000-006**	
gray	**793-5501/000-007**	
orange	**793-5501/000-012**	
light green	**793-5501/000-017**	
green	**793-5501/000-023**	
violet	**793-5501/000-024**	
		5
Decade marker carrier, for matrix patchboards ❷		
dark gray	**726-905**	10
Operating tool with partially insulated shaft, type 1, (2.5 x 0.4) mm blade		
	210-719	1
Test probe, 2 mm Ø, min. 12 mm long, uninsulated tip, not offered by WAGO (e.g., MultiContact XPP-80/2-16)		

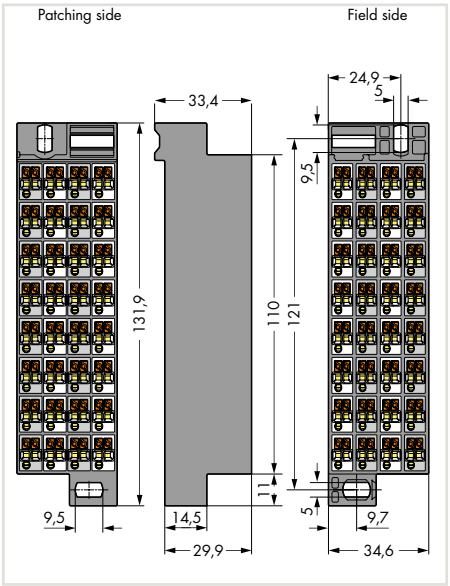

Dimensions in mm

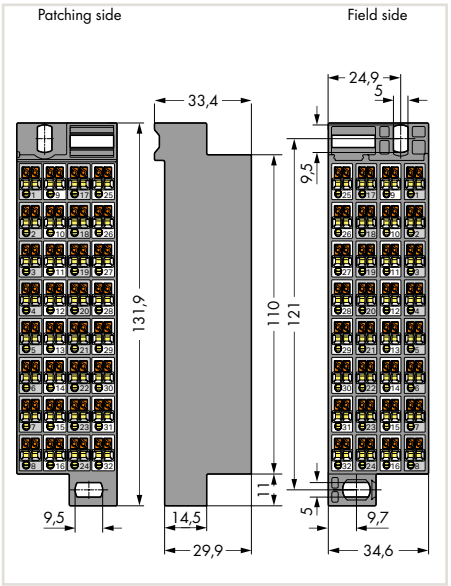

Dimensions in mm

11

Overview of certification organizations, see page 654

Additional Modules and Decade Marker Carriers

726 Series

0.08 ... 4 mm²	28 ... 12 AWG	Decade marker carrier
0.08 ... 2.5 mm²	28 ... 14 AWG	
500 V/4 kV/3 ❶	300 V, 10 A	
I_N 10 A		
9 mm / 0.35 inch		





❶ 500 V = rated voltage
6 kV = rated surge voltage
3 = pollution degree
(see Section 14)

	Item No.	Pack. Unit
Additional modules for matrix patchboards, for snap-on mounting to the lower mounting adapter, with CAGE CLAMP®, additional module with contact to mounting frame		
white	726-903	25
Additional modules for matrix patchboards, for snap-on mounting to the lower mounting adapter, with CAGE CLAMP®, insulated		
gray	726-904	25

	Item No.	Pack. Unit
Decade marker carrier, for matrix patchboards		
dark gray	726-905	10



Snapping on an additional module with contact to mounting frame.



Assembling a matrix patchboard with additional module – direct connection to the mounting frame.

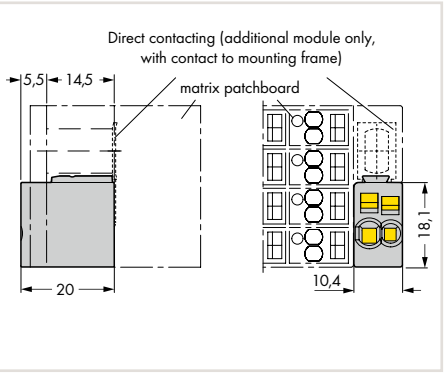

Dimensions in mm

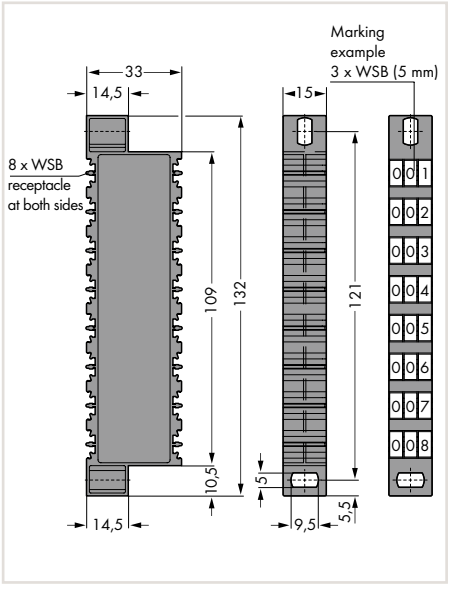

Dimensions in mm

11

Insulation Stops for Matrix Patchboards

726 Series

Insulation stop



	Item No.	Pack. Unit
Insulation stop, 4 x 3 pcs/strip, 0.08 ... 0.2 mm² "s" (0.14 mm² "f-st")		
○ white	**726-901**	200 (8x25)
Insulation stop, 4 x 3 pcs/strip, 0.25 mm² "s" 0.14 ... 0.25 mm² "f-st"		
○ light gray	**726-906**	200 (8x25)
Insulation stop, 4 x 3 pcs/strip, 0.25 ... 0.5 mm² "s+f-st"		
● dark gray	**726-907**	200 (8x25)
Suitable for patchboard side (side 1) of 1.5mm² matrix patchboards (front side differs from back side).		



Inserting an insulation stop into conductor entry holes of matrix patchboards.



Inserted insulation stop.

Terminal Blocks for Matrix Patching and Common Potential Terminal Blocks, 727 Series

Description and Installation



Snap individual 4- or 8-level terminal blocks onto the carrier rail.

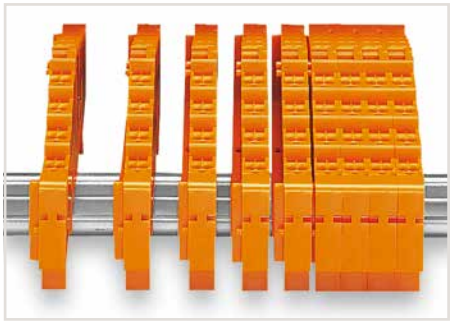

Slide terminal blocks together.

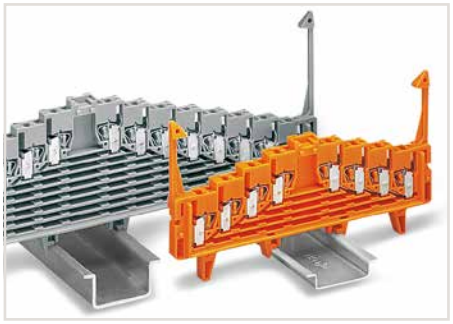

Terminal blocks for 35 x 7.5 mm or 35 x 15 mm rails are available.



Grip end plate at both sides and:
- push down (assembly)
- pull up (removal)

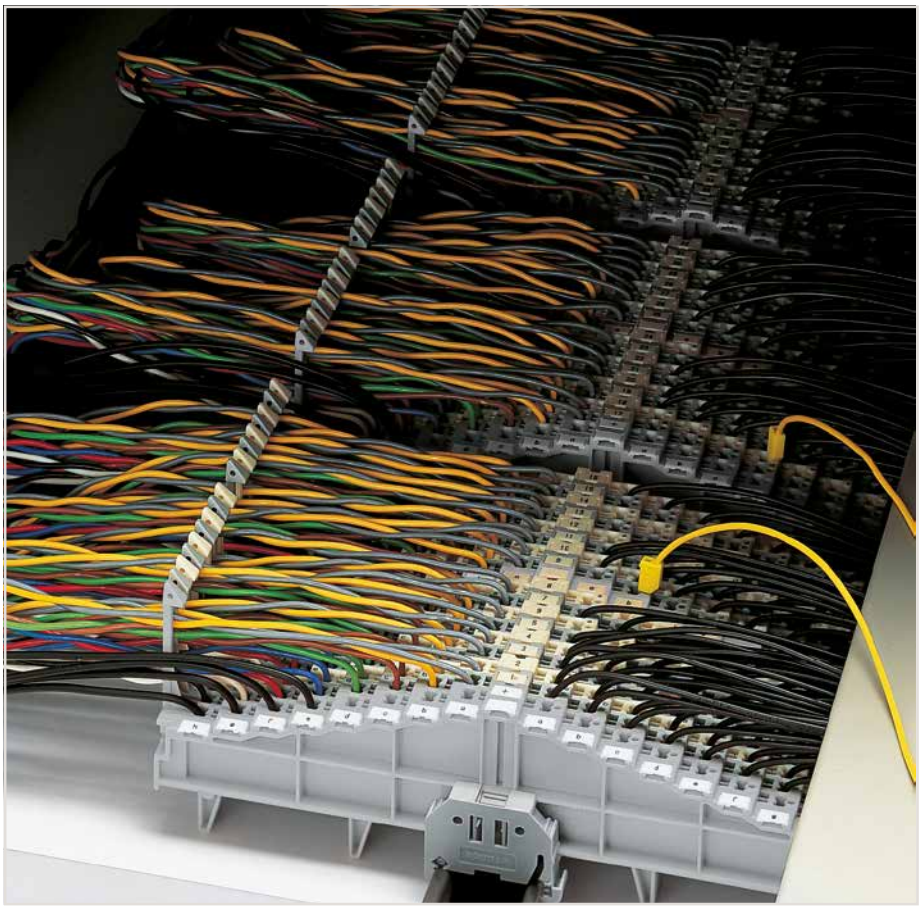

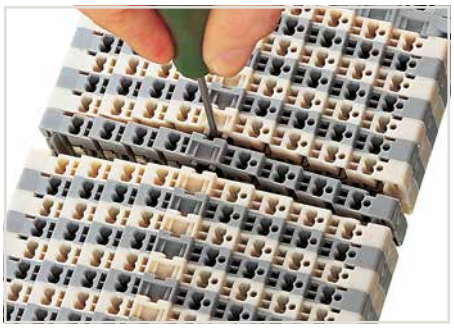

Open the assembly by laterally sliding a block via operating tool (2.5 x 0.4 mm blade).

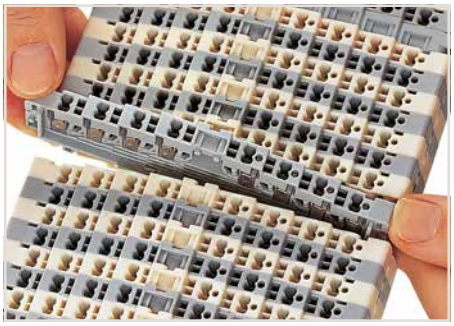

Slide terminal block and remove from the rail with a levering action.

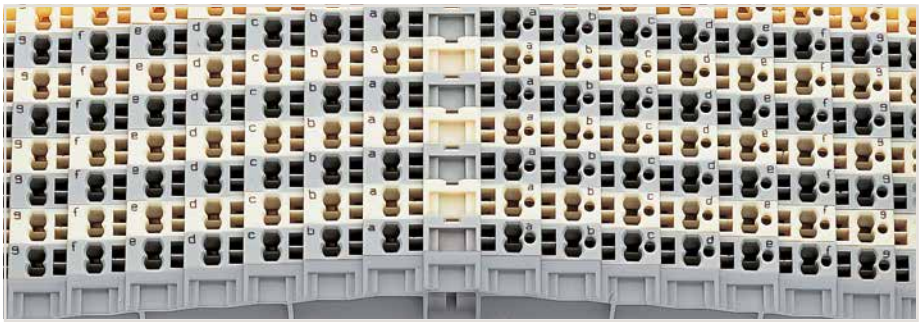

Connection points identified via factory-direct printing



CAGE CLAMP® terminates the following copper conductors:
solid



stranded



fine-stranded, also with tinned single strands

11

For aluminum conductors, see notes in Section 14.

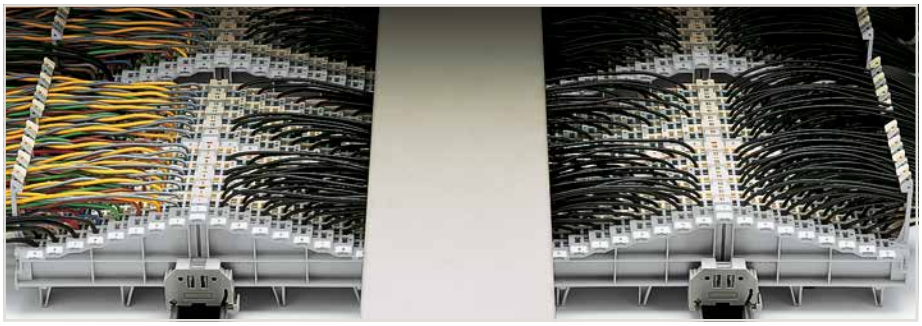

Example:
Left: Main cables fed through locking clips on the field side
Right: Control cables fed between locking clips
Center: Wiring of both patching sides



Using terminal blocks with locking clips, the wiring space between the terminal strips can be covered with a wiring duct cover.

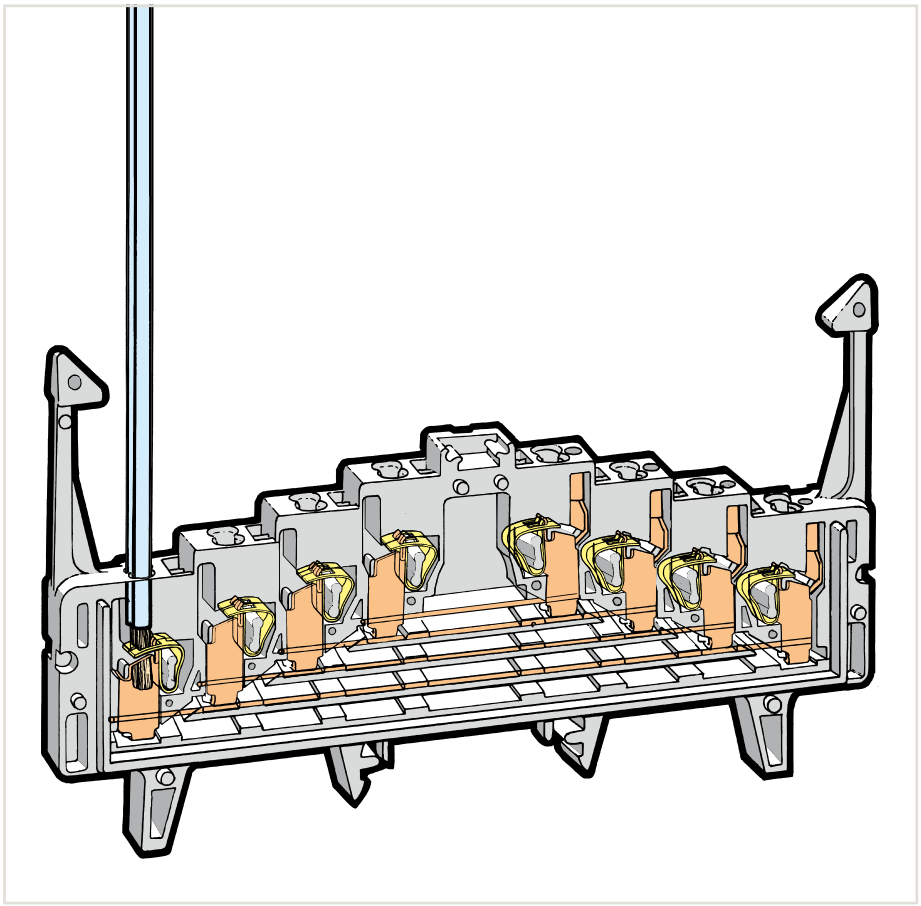

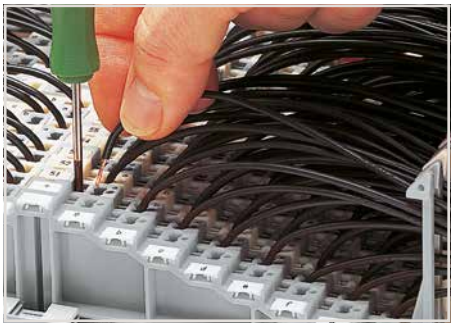

CAGE CLAMP® connection
Inserting a conductor via 210-719 Operating Tool (2.5 x 0.4 mm blade).
Max. cross section for uninsulated ferrules 1 mm² / 18 AWG, for insulated ferrules 0.75 mm² / 20 AWG.



Special test contact for 2.3 mm Ø test plug.

11



Marking coordinates via WMB Multi Marking System.

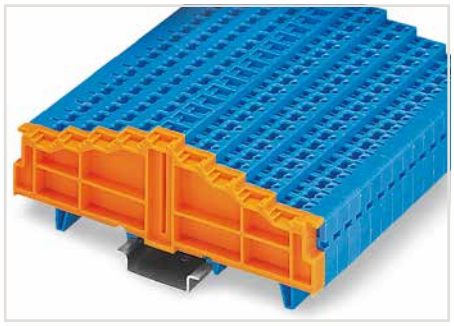

Blue terminal blocks for matrix patching are suitable for Ex i applications.



fine-stranded, tip-bonded



fine-stranded, with ferrule (gastight crimped)



fine-stranded, with pin terminal (gastight crimped)

4-Level Terminal Blocks for Matrix Patching

1.5 mm², 727 Series

0.08 … 1.5 mm²	28 … 16 AWG
250 V/4 kV/3 ❶	300 V, 10 A
I_N 12 A	300 V, 10 A

Terminal block width 7.62 mm / 0.3 inch
8 … 10 mm / 0.31 … 0.39 inch

0.08 … 1.5 mm²	28 … 16 AWG
250 V/4 kV/3 ❶	300 V, 10 A
I_N 12 A	300 V, 10 A

Terminal block width 7.62 mm / 0.3 inch
8 … 10 mm / 0.31 … 0.39 inch

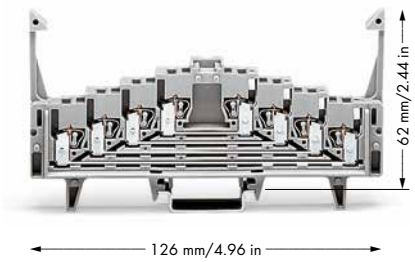

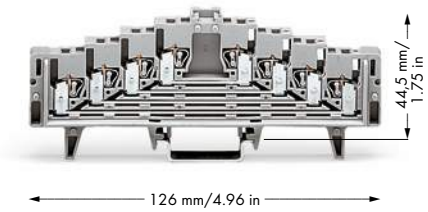

❶ 250 V = rated voltage
4 kV = rated surge voltage
3 = pollution degree
(see Section 14)

❷ Suitable for Ex i applications
60 V = peak value ^ (table 4, EN 60079-11) if approved by the works expert

❸ See application notes for:
Wire harness support, page 518

	Item No.	Pack. Unit
4-level terminal block for matrix patching, with locking clips, 4 x pairs of clamping units on the same level, for DIN-35 x 7.5		
gray	**727-219**	50
white	**727-221**	50
blue	**727-223** ❷	50
4-level terminal block for matrix patching, with locking clips, 4 x pairs of clamping units on the same level, for DIN-35 x 15		
gray	**727-229**	50
white	**727-231**	50
blue	**727-233** ❷	50
Item no. suffixes for terminal blocks with marking:		
0-1-2-3–3-2-1-0	**…/021-000**	
a-b-c-d–d-c-b-a	**…/022-000**	
3-2-1-0–0-1-2-3	**…/023-000**	
d-c-b-a–a-b-c-d	**…/024-000**	

	Item No.	Pack. Unit
4-level terminal block for matrix patching, without locking clips, 4 x pairs of clamping units on the same level, for DIN-35 x 7.5		
gray	**727-220**	50
white	**727-222**	50
blue	**727-224** ❷	50
4-level terminal block for matrix patching, without locking clips, 4 x pairs of clamping units on the same level, for DIN-35 x 15		
gray	**727-230**	50
white	**727-232**	50
blue	**727-234** ❷	50
Item no. suffixes for terminal blocks with marking:		
0-1-2-3–3-2-1-0	**…/021-000**	
a-b-c-d–d-c-b-a	**…/022-000**	
3-2-1-0–0-1-2-3	**…/023-000**	
d-c-b-a–a-b-c-d	**…/024-000**	

727 Series Accessories

Appropriate marking system:
WMB (see Section 13)

4-level end plate, 7.62 mm thick, without marking

orange **727-217** 25

4-level end plate, 7.62 mm thick, numeric marking, marking: 0-1-2-3–3-2-1-0

orange **727-205** 25

4-level end plate, 7.62 mm thick, alphanumeric marking, marking: a-b-c-d–d-c-b-a

orange **727-206** 25

4-level end plate, 7.62 mm thick, numeric marking, marking: 3-2-1-0–0-1-2-3

orange **727-207** 25

4-level end plate, 7.62 mm thick, alphanumeric marking, marking: d-c-b-a–a-b-c-d

orange **727-208** 25

Insulation stop, 8 pcs/strip, 0.08 … 0.2 mm² "s" (0.14 mm² "f-st")

white **727-197** 200 (8x25)

Insulation stop, 8 pcs/strip, 0.25 mm² "s" 0.14 … 0.25 mm² "s+f-st"

light gray **727-198** 200 (8x25)

Insulation stop, 8 pcs/strip, 0.25 … 0.5 mm² "s+f-st"

dark gray **727-199** 200 (8x25)

Wire commoning chain, insulated, 31 connections, I_N 6 A, max. 50 V, 0.5 mm²

gray **709-107** 1

Test plug, with 500 mm cable, 2.3 mm Ø, max. 42 V

yellow **210-137** 50

Step-down test plug, from 4 mm socket to 2 mm plug, max. 42 V

red **210-297** 100 (4x25)

Wire harness support
❸ 
gray **249-109** 50

Accessories

Double marker carrier, 4 mm wide, for I/O markings in the terminal block center

gray **209-128** 200 (2x100)

Screwless end stop, for DIN-35 rail, 6 mm wide

gray **249-116** 100 (4x25)

Screwless end stop, for DIN-35 rail, 10 mm wide

gray **249-117** 50 (2x25)

Operating tool with a partially insulated shaft, type 1, (2.5 x 0.4) mm blade

210-719 1

4-Level Common Potential Terminal Blocks

1.5 mm², 727 Series

0.08 … 1.5 mm²	28 … 16 AWG
250 V/4 kV/3 ❶	300 V, 10 A
I_N 18 A	300 V, 10 A
Terminal block width 7.62 mm / 0.3 inch	
8 … 10 mm / 0.31 … 0.39 inch	

0.08 … 1.5 mm²	28 … 16 AWG
250 V/4 kV/3 ❶	300 V, 10 A
I_N 18 A	300 V, 10 A
Terminal block width 7.62 mm / 0.3 inch	
8 … 10 mm / 0.31 … 0.39 inch	

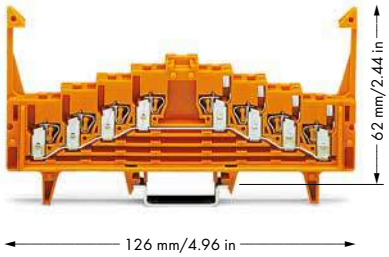

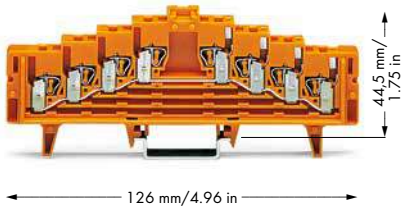

❶ 250 V = rated voltage
4 kV = rated surge voltage
3 = pollution degree
(see Section 14)

❷ See application notes for: Wire harness support, page 518

	Item No.	Pack. Unit
4-level common potential terminal block, with locking clips, all clamping units connected to the same current bar, for DIN-35 x 7.5		
orange	**727-225**	50
light gray	**727-227**	50
4-level common potential terminal block, with locking clips, all clamping units connected to the same current bar, for DIN-35 x 15		
orange	**727-235**	50
light gray	**727-237**	50
Item no. suffixes for terminal blocks with marking:		
0-1-2-3–3-2-1-0	**.../021-000**	
a-b-c-d–d-c-b-a	**.../022-000**	
3-2-1-0–0-1-2-3	**.../023-000**	
d-c-b-a–a-b-c-d	**.../024-000**	

	Item No.	Pack. Unit
4-level common potential terminal block, without locking clips, all clamping units connected to the same current bar, for DIN-35 x 7.5		
orange	**727-226**	50
light gray	**727-228**	50
4-level common potential terminal block, without locking clips, all clamping units connected to the same current bar, for DIN-35 x 15		
orange	**727-236**	50
light gray	**727-238**	50
Item no. suffixes for terminal blocks with marking:		
0-1-2-3–3-2-1-0	**.../021-000**	
a-b-c-d–d-c-b-a	**.../022-000**	
3-2-1-0–0-1-2-3	**.../023-000**	
d-c-b-a–a-b-c-d	**.../024-000**	

727 Series Accessories

Appropriate marking system:
WMB (see Section 13)

4-level end plate, 7.62 mm thick, without marking			
orange	**727-217**	25	
4-level end plate, 7.62 mm thick, numeric marking, marking: 0-1-2-3–3-2-1-0			
orange	**727-205**	25	
4-level end plate, 7.62 mm thick, alphanumeric marking, marking: a-b-c-d–d-c-b-a			
orange	**727-206**	25	
4-level end plate, 7.62 mm thick, numeric marking, marking: 3-2-1-0–0-1-2-3			
orange	**727-207**	25	
4-level end plate, 7.62 mm thick, alphanumeric marking, marking: d-c-b-a–a-b-c-d			
orange	**727-208**	25	
Insulation stop, 8 pcs/strip, 0.08 … 0.2 mm² "s" (0.14 mm² "f-st")			
white	**727-197**	200 (8x25)	
Insulation stop, 8 pcs/strip, 0.25 mm² "s" 0.14 … 0.25 mm² "s+f-st"			
light gray	**727-198**	200 (8x25)	
Insulation stop, 8 pcs/strip, 0.25 … 0.5 mm² "s+f-st"			
dark gray	**727-199**	200 (8x25)	
Wire commoning chain, insulated, 31 connections, I_N 6 A, max. 50 V, 0.5 mm²			
gray	**709-107**	1	
Test plug, with 500 mm cable, 2.3 mm Ø, max. 42 V			
yellow	**210-137**	50	
Step-down test plug, from 4 mm socket to 2 mm plug, max. 42 V			
red	**210-297**	100 (4x25)	
Wire harness support			
❷ gray	**249-109**	50	

Accessories

Double marker carrier, 4 mm wide, for I/O markings in the terminal block center			
gray	**209-128**	200 (2x100)	
Screwless end stop, for DIN-35 rail, 6 mm wide			
gray	**249-116**	100 (4x25)	
Screwless end stop, for DIN-35 rail, 10 mm wide			
gray	**249-117**	50 (2x25)	
Operating tool with a partially insulated shaft, type 1, (2.5 x 0.4) mm blade			
	210-719	1	

11

8-Level Terminal Blocks for Matrix Patching

1.5 mm², 727 Series

0.08 … 1.5 mm²	28 … 16 AWG
250 V/4 kV/3 ❶	300 V, 10 A
I_N 10 A	300 V, 10 A

Terminal block width 7.62 mm / 0.3 inch
8 … 10 mm / 0.31 … 0.39 inch

0.08 … 1.5 mm²	28 … 16 AWG
250 V/4 kV/3 ❶	300 V, 10 A
I_N 10 A	300 V, 10 A

Terminal block width 7.62 mm / 0.3 inch
8 … 10 mm / 0.31 … 0.39 inch

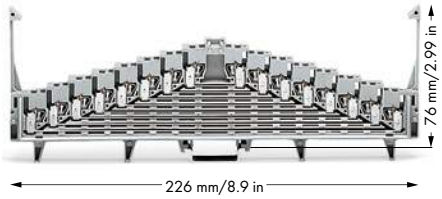



❶ 250 V = rated voltage
4 kV = rated surge voltage
3 = pollution degree
(see Section 14)

❷ Suitable for Ex i applications
60 V = peak value ^ (table 4, EN 60079-11) if approved by the works expert

❸ See application notes for:
Wire harness support, page 518

Note: Only combine terminal blocks and end plates that are colored gray/white/light gray or orange/blue!

	Item No.	Pack. Unit
8-level terminal block for matrix patching, with locking clips, 8 x pairs of clamping units on the same level, for DIN-35 x 7.5		
gray	**727-119**	25
white	**727-121**	25
blue	**727-123** ❷	25
8-level terminal block for matrix patching, with locking clips, 8 x pairs of clamping units on the same level, for DIN-35 x 15		
gray	**727-129**	25
white	**727-131**	25
blue	**727-133** ❷	25
Item no. suffixes for terminal blocks with marking:		
0-1-2-3-4-5-6-7–7-6-5-4-3-2-1-0	**.../001-000**	
a-b-c-d-e-f-g-h–h-g-f-e-d-c-b-a	**.../002-000**	
7-6-5-4-3-2-1-0–0-1-2-3-4-5-6-7	**.../003-000**	
h-g-f-e-d-c-b-a–a-b-c-d-e-f-g-h	**.../004-000**	

	Item No.	Pack. Unit
8-level terminal block for matrix patching, without locking clips, 8 x pairs of clamping units on the same level, for DIN-35 x 7.5		
gray	**727-120**	25
white	**727-122**	25
blue	**727-124** ❷	25
8-level terminal block for matrix patching, without locking clips, 8 x pairs of clamping units on the same level, for DIN-35 x 15		
gray	**727-130**	25
white	**727-132**	25
blue	**727-134** ❷	25
Item no. suffixes for terminal blocks with marking:		
0-1-2-3-4-5-6-7–7-6-5-4-3-2-1-0	**.../001-000**	
a-b-c-d-e-f-g-h–h-g-f-e-d-c-b-a	**.../002-000**	
7-6-5-4-3-2-1-0–0-1-2-3-4-5-6-7	**.../003-000**	
h-g-f-e-d-c-b-a–a-b-c-d-e-f-g-h	**.../004-000**	

727 Series Accessories

Appropriate marking system:
WMB (see Section 13)

8-level end plate, 7.62 mm thick, without marking



orange	**727-117**	25
gray	**727-113**	25
blue	**727-114**	25
white	**727-115**	25
light gray	**727-116**	25

8-level end plate, 7.62 mm thick, numeric marking, marking: 0-1-2-3-4-5-6-7–7-6-5-4-3-2-1-0



orange	**727-105**	25
gray	**727-155**	25
blue	**727-159**	25
white	**727-163**	25
light gray	**727-167**	25

8-level end plate, 7.62 mm thick, alphanumeric marking, marking: a-b-c-d-e-f-g-h–h-g-f-e-d-c-b-a



orange	**727-106**	25
gray	**727-156**	25
blue	**727-160**	25
white	**727-164**	25
light gray	**727-168**	25

8-level end plate, 7.62 mm thick, numeric marking, marking: 7-6-5-4-3-2-1-0–0-1-2-3-4-5-6-7



orange	**727-107**	25
gray	**727-157**	25
blue	**727-161**	25
white	**727-165**	25
light gray	**727-169**	25

8-level end plate, 7.62 mm thick, alphanumeric marking, marking: h-g-f-e-d-c-b-a–a-b-c-d-e-f-g-h



orange	**727-108**	25
gray	**727-158**	25
blue	**727-162**	25
white	**727-166**	25
light gray	**727-170**	25

Insulation stop, 8 pcs/strip, 0.08 … 0.2 mm² "s" (0.14 mm² "f-st")



white **727-197** 200 (8x25)

Insulation stop, 8 pcs/strip, 0.25 mm² "s" 0.14 … 0.25 mm² "s+f-st"



light gray **727-198** 200 (8x25)

Accessories

Insulation stop, 8 pcs/strip, 0.25 … 0.5 mm² "s+f-st"



dark gray **727-199** 200 (8x25)

Wire commoning chain, insulated, 31 connections, I_N 6 A, max. 50 V, 0.5 mm²



gray **709-107** 1

Test plug, with 500 mm cable, 2.3 mm Ø, max. 42 V



yellow **210-137** 50

Step-down test plug, from 4 mm socket to 2 mm plug, max. 42 V



red **210-297** 100 (4x25)

Wire harness support

❸ 

gray **249-109** 50

Double marker carrier, 4 mm wide, for I/O markings in the terminal block center



gray **209-128** 200 (2x100)

WMB Multi marking system, for terminal widths 5 … 17.5 mm, for PLC input marking



white **793-933** 5

Screwless end stop, for DIN-35 rail, 6 mm wide



gray **249-116** 100 (4x25)

Screwless end stop, for DIN-35 rail, 10 mm wide



gray **249-117** 50 (2x25)

Operating tool with a partially insulated shaft, type 1, (2.5 x 0.4) mm blade



210-719 1

8-Level Common Potential Terminal Blocks

1.5 mm², 727 Series

0.08 … 1.5 mm²	28 … 16 AWG
250 V/4 kV/3 ❶	300 V, 10 A
I_N 18 A	300 V, 10 A
Terminal block width 7.62 mm / 0.3 inch	
8 … 10 mm / 0.31 … 0.39 inch	

0.08 … 1.5 mm²	28 … 16 AWG
250 V/4 kV/3 ❶	300 V, 10 A
I_N 18 A	300 V, 10 A
Terminal block width 7.62 mm / 0.3 inch	
8 … 10 mm / 0.31 … 0.39 inch	

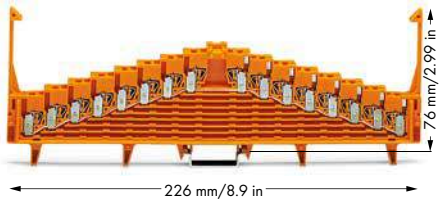

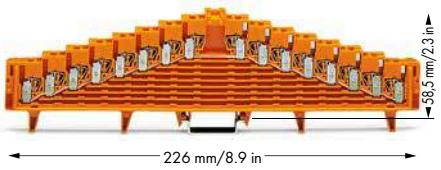

❶ 250 V = rated voltage
4 kV = rated surge voltage
3 = pollution degree
(see Section 14)

❷ See application notes for:
Wire harness support, page 518

Note: Only combine terminal blocks and end plates that are colored gray/white/light gray or orange/blue!

	Item No.	Pack. Unit
8-level common potential terminal block, with locking clips, all clamping units connected to the same current bar, for DIN-35 x 7.5		
orange	**727-125**	25
light gray	**727-127**	25
8-level common potential terminal block, with locking clips, all clamping units connected to the same current bar, for DIN-35 x 15		
orange	**727-135**	25
light gray	**727-137**	25
Item no. suffixes for terminal blocks with marking:		
0-1-2-3-4-5-6-7–7-6-5-4-3-2-1-0	**…/001-000**	
a-b-c-d-e-f-g-h–h-g-f-e-d-c-b-a	**…/002-000**	
7-6-5-4-3-2-1-0–0-1-2-3-4-5-6-7	**…/003-000**	
h-g-f-e-d-c-b-a–a-b-c-d-e-f-g-h	**…/004-000**	

	Item No.	Pack. Unit
8-level common potential terminal block, without locking clips, all clamping units connected to the same current bar, for DIN-35 x 7.5		
orange	**727-126**	25
light gray	**727-128**	25
8-level common potential terminal block, without locking clips, all clamping units connected to the same current bar, for DIN-35 x 15		
orange	**727-136**	25
light gray	**727-138**	25
Item no. suffixes for terminal blocks with marking:		
0-1-2-3-4-5-6-7–7-6-5-4-3-2-1-0	**…/001-000**	
a-b-c-d-e-f-g-h–h-g-f-e-d-c-b-a	**…/002-000**	
7-6-5-4-3-2-1-0–0-1-2-3-4-5-6-7	**…/003-000**	
h-g-f-e-d-c-b-a–a-b-c-d-e-f-g-h	**…/004-000**	

727 Series Accessories

Appropriate marking system:
WMB (see Section 13)

8-level end plate, 7.62 mm thick, without marking

orange	**727-117**	25
gray	**727-113**	25
blue	**727-114**	25
white	**727-115**	25
light gray	**727-116**	25

8-level end plate, 7.62 mm thick, numeric marking, marking: 0-1-2-3-4-5-6-7–7-6-5-4-3-2-1-0

orange	**727-105**	25
gray	**727-155**	25
blue	**727-159**	25
white	**727-163**	25
light gray	**727-167**	25

8-level end plate, 7.62 mm thick, alphanumeric marking, marking: a-b-c-d-e-f-g-h–h-g-f-e-d-c-b-a

orange	**727-106**	25
gray	**727-156**	25
blue	**727-160**	25
white	**727-164**	25
light gray	**727-168**	25

8-level end plate, 7.62 mm thick, numeric marking, marking: 7-6-5-4-3-2-1-0–0-1-2-3-4-5-6-7

orange	**727-107**	25
gray	**727-157**	25
blue	**727-161**	25
white	**727-165**	25
light gray	**727-169**	25

8-level end plate, 7.62 mm thick, alphanumeric marking, marking: h-g-f-e-d-c-b-a–a-b-c-d-e-f-g-h

orange	**727-108**	25
gray	**727-158**	25
blue	**727-162**	25
white	**727-166**	25
light gray	**727-170**	25

Insulation stop, 8 pcs/strip, 0.08 … 0.2 mm² "s" (0.14 mm² "f-st")

white	**727-197**	200 (8x25)

Insulation stop, 8 pcs/strip, 0.25 mm² "s" 0.14 … 0.25 mm² "s+f-st"

light gray	**727-198**	200 (8x25)

Accessories

Insulation stop, 8 pcs/strip, 0.25 … 0.5 mm² "s+f-st"

dark gray	**727-199**	200 (8x25)

Wire commoning chain, insulated, 31 connections, I_N 6 A, max. 50 V, 0.5 mm²

gray	**709-107**	1

Test plug, with 500 mm cable, 2.3 mm Ø, max. 42 V

yellow	**210-137**	50

Step-down test plug, from 4 mm socket to 2 mm plug, max. 42 V

red	**210-297**	100 (4x25)

Wire harness support ❷

gray	**249-109**	50

Double marker carrier, 4 mm wide, for I/O markings in the terminal block center

gray	**209-128**	200 (2x100)

Screwless end stop, for DIN-35 rail, 6 mm wide

gray	**249-116**	100 (4x25)

Screwless end stop, for DIN-35 rail, 10 mm wide

gray	**249-117**	50 (2x25)

Operating tool with a partially insulated shaft, type 1, (2.5 x 0.4) mm blade

210-719	1

11

Terminal Blocks for Matrix Patching, 280 Series

Description and Installation

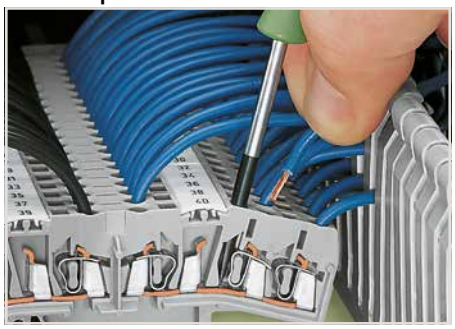

Terminal blocks for matrix patching:
Inserting/removing a conductor on the terminal block's side-entry.
With ferruled conductors, it is necessary to use a terminal block one size smaller than the conductor's nominal cross section.



Terminal blocks for matrix patching:
Inserting/removing a conductor in the terminal block's center.

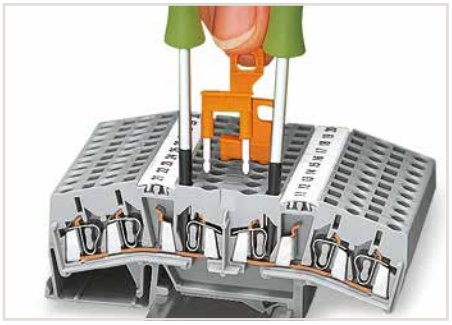

Using terminal blocks for matrix patching as disconnect terminal blocks via disconnect jumpers.

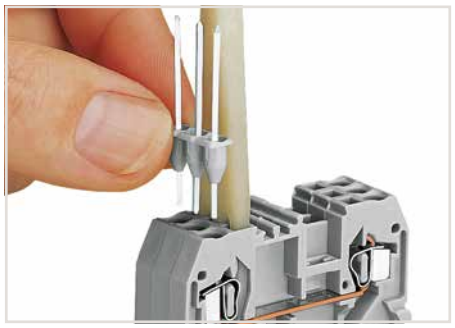

Inserting a pin module into 280 Series blocks.

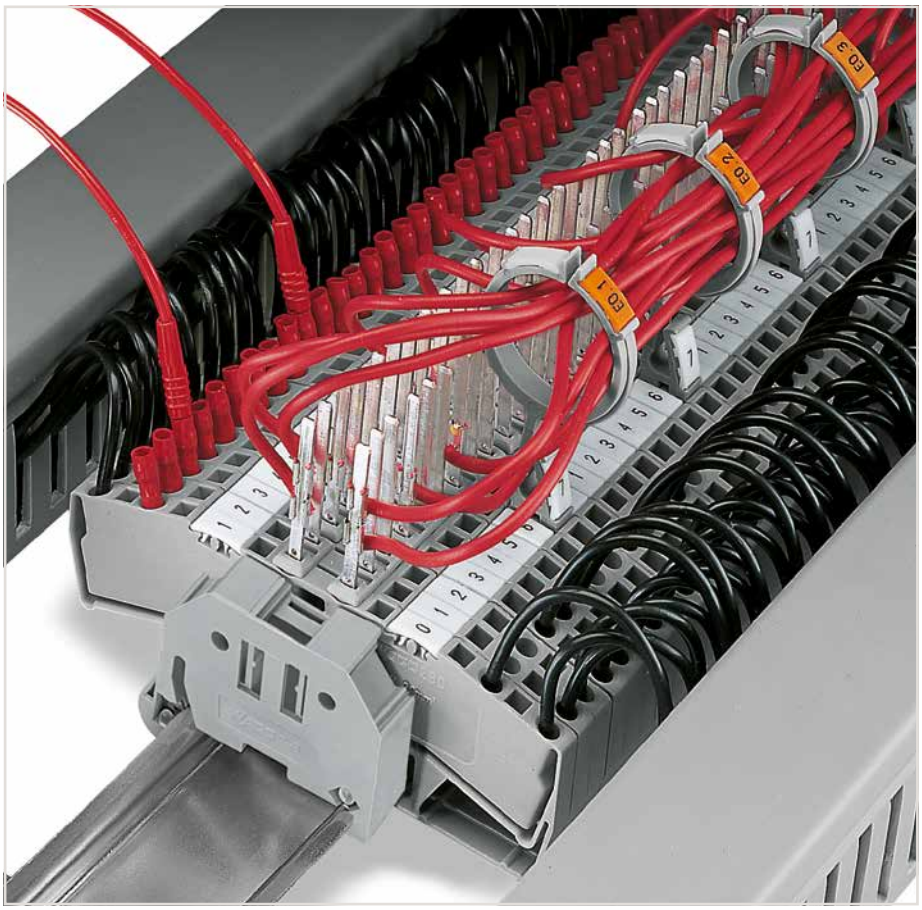



Multiplying potentials via 10-way comb-style jumper bar. (only possible in the terminal block's center)



Clipping a wire harness support into the marker slot.



Inserting a cable into the wire harness support.

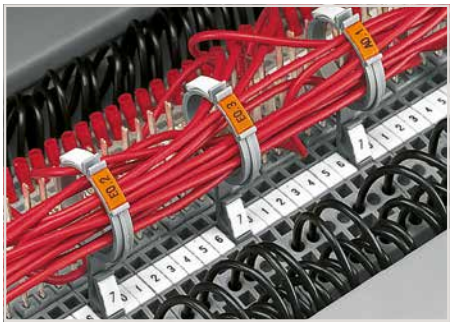

2 x group marking on top
1 x terminal block marking at the bottom

CAGE CLAMP® terminates the following copper conductors:
solid | stranded | fine-stranded, also with tinned single strands | fine-stranded, tip-bonded | fine-stranded, with ferrule (gastight crimped) | fine-stranded, with pin terminal (gastight crimped)

For aluminum conductors, see notes in Section 14. When using ferrules, the max. conductor cross section accommodated is one size smaller than max. rating of terminal block.

Terminal Blocks for Matrix Patching

2.5 mm², 280 Series

0.08 ... 2.5 mm² | **28 ... 12 AWG***
800 V/8 kV/3 ❶ | **600 V, 10 A**
I_N 18 A

Terminal block width 5 mm / 0.197 inch
8 ... 9 mm / 0.31 ... 0.35 inch

In measurement and control technology, matrix patchboards are essential for process automation systems. Particularly beneficial to these applications is the use of the WAGO wire harness support, which simplifies wiring. WAGO's 280 Series 3-Conductor Double-Potential Terminal Blocks (with or without the addition of Wire-Wrap® or TERMI-POINT® pins) are also ideal for this type of application. They can be used for connecting peripheral field devices (e.g. measuring and control equipment) to process control systems (e.g., panels, cabinets) via matrix connections.
The WAGO wire harness supports are pushed into the terminal blocks (approx. every 8th unit) to form an additional "cable-duct" above the wiring level of the terminal blocks. The two marker slots on the top may be used for group marking, while the lower slot is used for marking the terminal block.

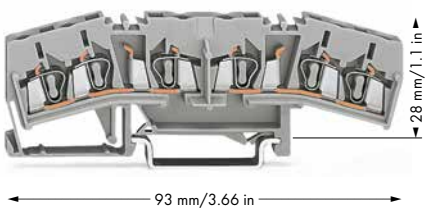

* 12 AWG: THHN, THWN

❶ 800 V = rated voltage
8 kV = rated surge voltage
3 = pollution degree
(see Section 14)
500 V/6 kV/3 between current bars
(if used as disconnect terminal block or potential multiplier)

❷ See application notes for:
Insulation stop, page 331
Comb-style jumper bar, page 332
Operating tool, page 332

Item No.		Pack. Unit
3-conductor double-potential terminal block or terminal block for matrix patching		
Notice: This 3-conductor double-potential terminal block cannot be commoned via adjacent jumpers.		
gray	**280-675**	50

Accessories

Appropriate marking system:
WMB (see Section 13)

End and intermediate plate, 5 mm thick
orange **280-333** 25
gray **280-325** 25

Seperator, 3 mm oversized, 1 mm thick
orange **280-394** 100 (4x25)
gray **280-395** 100 (4x25)

Insulation stop, 5 pcs/strip, 0.08 ... 0.2 mm² "s" (0.14 mm² "f-st") ❷
white **280-470** 200 (8x25)

Insulation stop, 5 pcs/strip, 0.25 ... 0.5 mm² ❷
light gray **280-471** 200 (8x25)

Insulation stop, 5 pcs/strip, 0.75 ... 1 mm² ❷
dark gray **280-472** 200 (8x25)

Alternate comb-style jumper bar, insulated, I_N = I_N terminal block
2-way **280-492** 200 (8x25)

Comb-style jumper bar, insulated, I_N = I_N terminal block ❷
2-way **280-482** 200 (8x25)
3-way **280-483** 200 (8x25)

Comb-style jumper bar, insulated, I_N = I_N terminal block
10-way **280-490** 50 (2x25)

Disconnect jumper, with pull-tab, I_N = I_N of terminal block,
orange
2-way **280-494** 200 (8x25)

Operating tool, of insulating material
2-way **280-432** 1
3-way **280-433** 1

Accessories

Operating tool, of insulating material
10-way **280-440** 1

Protective warning marker, with black high-voltage symbol, for 5 terminal blocks
yellow **280-415** 100 (4x25)

Pin module, 2-pole, for self-assembly on all 280 Series front-entry rail-mount terminal blocks, for Wire-Wrap®, 1 x 1 mm
280-477 100

Pin module, 2-pole, for TERMI-POINT®, 0.8 x 1.6 mm
280-475 100

Pin module, 2-pole, for TERMI-POINT®, 0.8 x 2.4 mm
280-473 100

Pin module, 3-pole, for Wire-Wrap®, 1 x 1 mm
280-478 100

Pin module, 3-pole, for TERMI-POINT®, 0.8 x 1.6 mm
280-476 100

Pin module, 3-pole, for TERMI-POINT®, 0.8 x 2.4 mm
280-474 100

Wire harness support
gray **249-109** 50

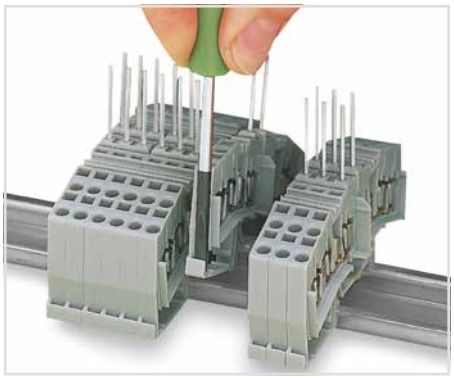

Please note that due to the protruding rods, the terminal blocks can only be inserted or removed from the assembly after sliding adjacent terminal blocks on the rail.
Removal: Separate terminal strip, slide terminal block to disconnect and then remove from the carrier rail.

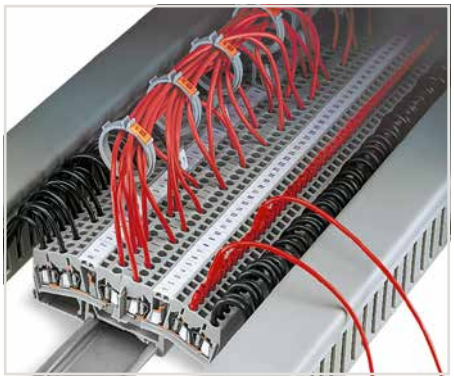

Terminal blocks for matrix patching with wire harness supports:
For 5 mm wide double-potential terminal blocks, two 3-conductor through terminal blocks are offered in one insulating housing on one level. This achieves a width of just 2.5 mm versus standard through terminal blocks. On each side of the terminal block are marker slots for WAGO WMB Inline markers. Via the available accessories, these terminal blocks can also be used as 4-conductor disconnect terminal blocks or potential multipliers.

The WAGO wire harness supports are pushed into the terminal blocks (approx. every 8th unit) to form an additional "cable-duct" above the wiring level of the terminal blocks. The two marker slots on the top may be used for group marking, while the lower slot is used for marking the terminal block.

11

Busbar Terminal Blocks, 812 Series

Description and Installation

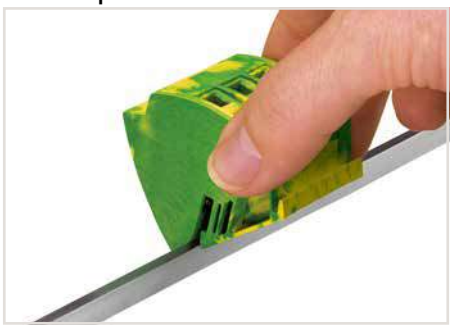

Snapping a ground busbar terminal block onto the N-busbar.



Unlock right and left positions to remove the ground busbar terminal block. Then pull up the block from the busbar.

Using the 812 Series Busbar Terminal Blocks in switchgear cabinets and distribution boards permits simple and safe potential distribution on standard (10 x 3) mm busbars. Tool-free snapping of self-locking busbar terminal blocks onto the busbar enables quick and easy assembly, as well as subsequent extension. The busbar terminal blocks are available in two different versions for conductors ranging from 1.5 … 16 mm² (16 … 6 AWG).
Current carrying capacity: With a maximum total current of 96 A, the clamping units of the busbar terminal block can be loaded with the rated current of the conductor cross-sections approved. This only applies when (10 x 3) mm busbars are used.

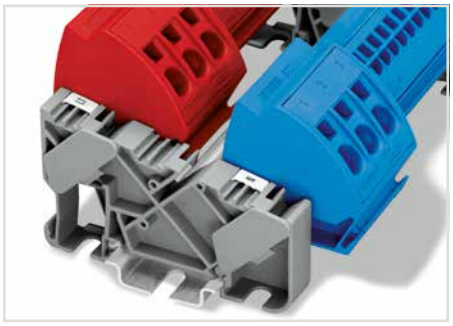

Busbar carrier (812-140):
Offers three receptacles for (10 x 3) mm busbars with locking device for easy mounting of the busbars. The carrier can be snapped onto the DIN-35 rail or screwed on a panel.

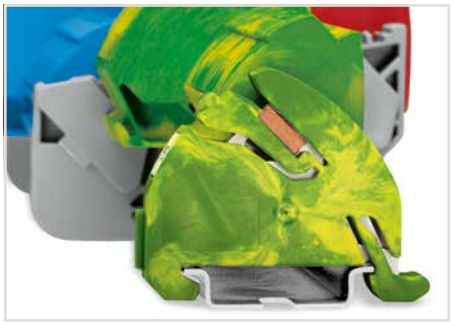

Ground busbar carrier (812-141):
Offers a receptacle with locking device for (10 x 3) mm busbar. Contact between the busbar and rail is made automatically by simply snapping the carrier onto the DIN-35 rail. One end of the busbar is mounted onto the ground busbar carrier, the other end is inserted into the middle position of the insulated busbar carrier.

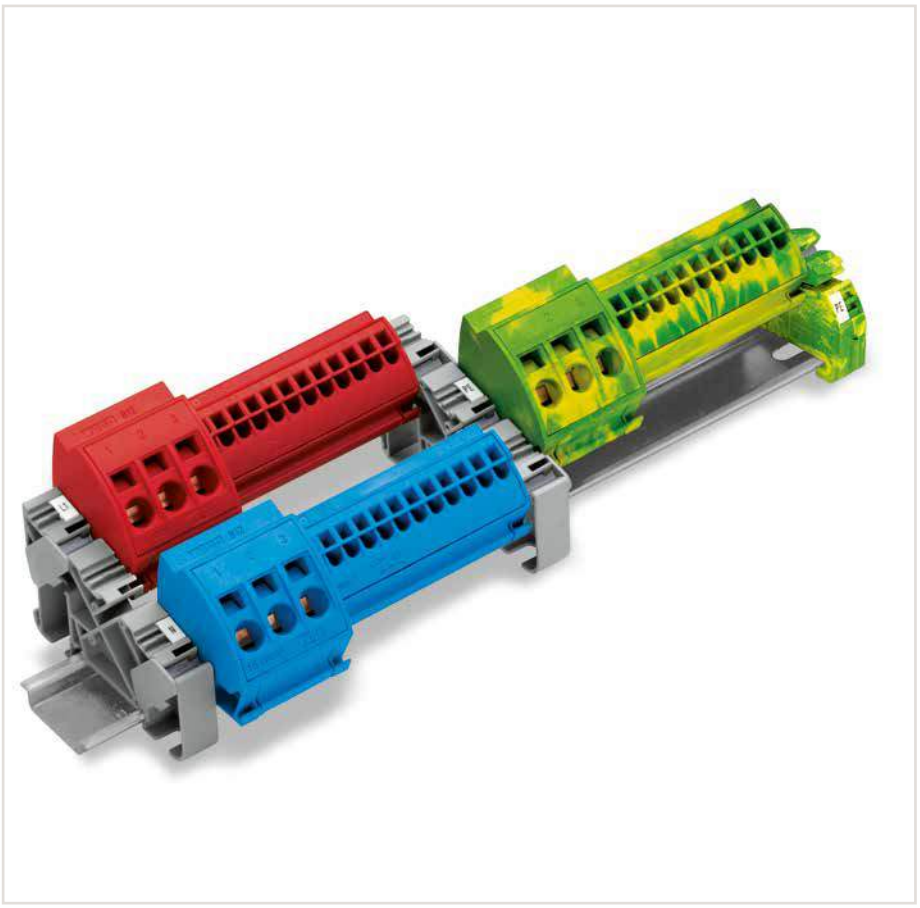

Mixed 4 mm² (12 AWG) and 16 mm² (6 AWG) busbar terminal blocks

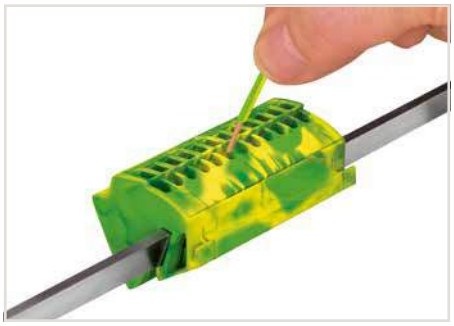

Conductor termination (4 mm²/12 AWG):
With Push-in CAGE CLAMP®, solid conductors can be terminated by simply pushing them into the 12 x 4 mm² busbar terminal block, significantly reducing wiring time.

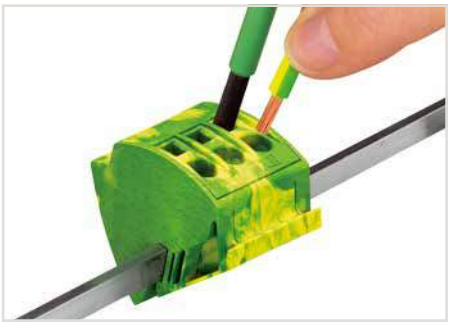

Conductor termination (16 mm²/6 AWG):
Open the clamping unit with an operating tool when terminating solid, stranded and fine-stranded conductors.

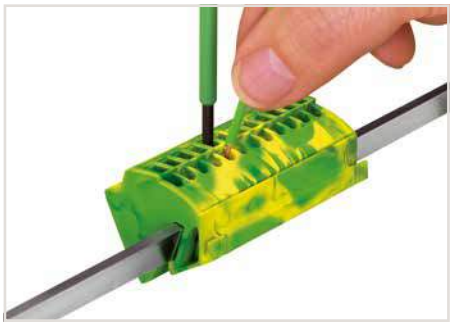

Conductor removal (4 mm²/12 AWG and 16 mm²/6 AWG):
Open the clamping unit using an operating tool.

CAGE CLAMP® and Push-in CAGE CLAMP® terminates the following copper conductors:

solid	stranded	fine-stranded, also with tinned single strands	fine-stranded, tip-bonded

For aluminum conductors, see notes in Section 14.

Busbar Terminal Blocks

4 mm² and 16 mm², 812 Series

0.5 ... 4 mm² **1000 V/6 kV/3** **I_N 96 A**	**20 ... 12 AWG** **600 V, 20 A** **600 V, 95 A**	**1.5 ... 16 mm²** **1000 V/6 kV/3** **I_N 96 A**	**14 ... 6 AWG** **600 V, 20 A** **600 V, 95 A**	**Insulated busbar carrier**
Terminal block width 75 mm / 2.953 inch **11 mm / 0.43 inch**		**Terminal block width 38 mm / 1.496 inch** **12 mm / 0.47 inch**		



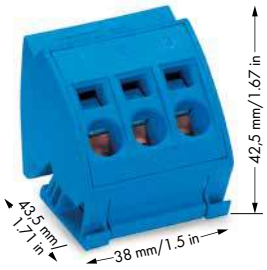

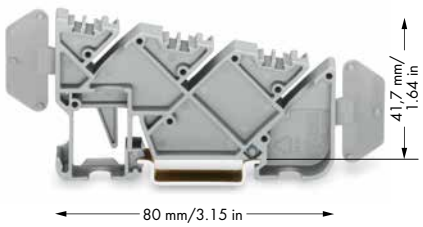

	Item No.	Pack. Unit
Busbar terminal block (4 mm²/12 AWG), with Push-in CAGE CLAMP®		
blue	**812-104**	10
light gray	**812-101**	10
dark gray	**812-102**	10
red	**812-103**	10

Item-Specific Accessories

Straight busbar, tin-plated, 1000 mm long, copper (10 x 3) mm



I_N 140 A	**210-133**	1

	Item No.	Pack. Unit
Busbar terminal block (16 mm²/6 AWG), with CAGE CLAMP®		
blue	**812-114**	12
light gray	**812-111**	12
dark gray	**812-112**	12
red	**812-113**	12

Item-Specific Accessories

Straight busbar, tin-plated, 1000 mm long, copper (10 x 3) mm



I_N 140 A	**210-133**	1

Finger guard, touch-proof cover protects unused conductor entries



yellow	**284-400**	100 (4x25)

	Item No.	Pack. Unit
Insulated busbar carrier, 12 mm wide		
gray	**812-140**	25

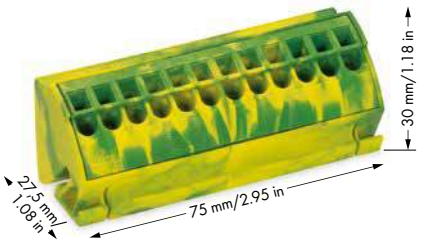

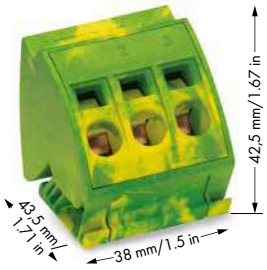

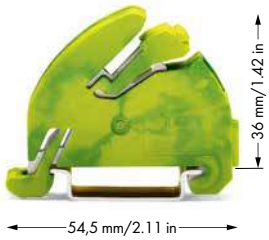

	Item No.	Pack. Unit
Ground busbar terminal block (4 mm²/12 AWG), with Push-in CAGE CLAMP®		
green-yellow	**812-100**	10

Item-Specific Accessories

Straight busbar, tin-plated, 1000 mm long, copper (10 x 3) mm



I_N 140 A	**210-133**	1

	Item No.	Pack. Unit
Ground busbar terminal block (16 mm²/6 AWG), with CAGE CLAMP®		
green-yellow	**812-110**	12

Item-Specific Accessories

Straight busbar, tin-plated, 1000 mm long, copper (10 x 3) mm



I_N 140 A	**210-133**	1

Finger guard, touch-proof cover protects unused conductor entries



yellow	**284-400**	100 (4x25)

	Item No.	Pack. Unit
Ground busbar carrier, with DIN-35 rail contact, 11 mm wide		
green-yellow	**812-141**	25

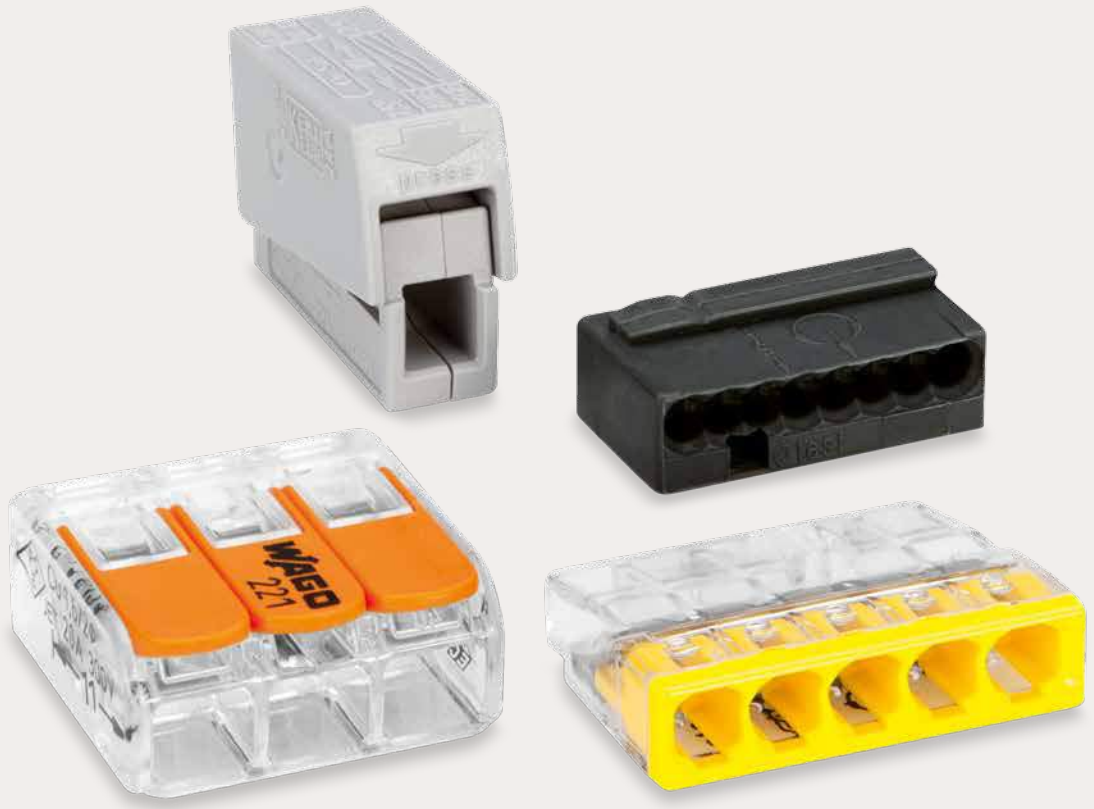

Lighting Connectors, Junction Box and Splicing Connectors

Lighting Connectors, PUSH WIRE® Connectors for Junction Boxes, Lever-Actuated Splicing Connectors for All Conductor Types

			Page
	**COMPACT PUSH WIRE® Connectors for Junction Boxes** 2.5 mm² (14 AWG)	2273 Series	525
	**PUSH WIRE® Connectors for Junction Boxes** 4 mm² and 6 mm² (10 AWG)	773 Series	528
	**Ex PUSH WIRE® Connectors for Junction Boxes** 2.5 mm² (12 AWG) and 6 mm² (10 AWG)	773 Series	530
	**MICRO PUSH WIRE® Connectors for Junction Boxes** 0.8 mm Ø (20 AWG)	243 Series	534
	**COMPACT Splicing Connectors for All Conductor Types** 4 mm² (12 AWG)	221 Series	537
	**CLASSIC Splicing Connectors for All Conductor Types** 2.5 mm² (12 AWG)	222 Series	543
	**Vario-T-Boxx**	887 Series	546
	**Lighting and “Service” Connectors** 2.5 mm² (16 AWG)	224 Series	549
	**Luminaire Disconnect Connectors** 12 AWG	873 Series	550

PUSH WIRE®

COMPACT PUSH WIRE® Connectors for Junction Boxes and Solid Conductors, 2273 Series

Description and Installation

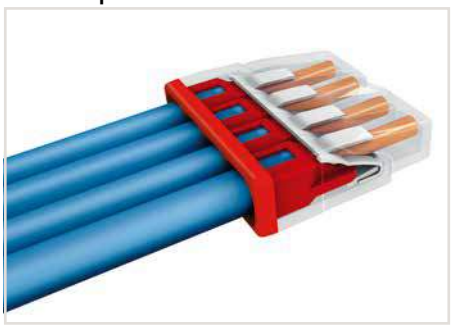

Advantages:
- Convenient wiring via extremely compact design
- Terminate up to 8 solid conductors by simply pushing them in
- Connect conductors ranging from 0.5 to 2.5 mm²
- Any combination of conductor sizes is possible
- PUSH WIRE® connection terminates solid ("s") copper conductors



Strip solid conductor to 11 mm / 0.43 inch (see marking).



Termination: Insert stripped solid conductor until it hits backstop.



The transparent housing shows if conductors are fully inserted; within the colored base, a clear port shows if the conductor's strip length is correct.
Conductors are correctly stripped if the clear port shows no bare conductor on the unprinted connector side. Picture shows center conductor with exceeded strip length.



Removal: Hold conductor to be removed and twist alternately left and right while pulling the connector.



Testing via test port opposite to conductor entry.

One single carrier can hold up to 24 clamping units in a very narrow space. Previously, this was only possible using rail-mount terminal blocks.

Advantages:
- Mount carrier onto DIN-35 rail or via screws – easily and quickly
- Accommodate up to three 2.5 mm² (12 AWG) 2273 Series connectors in a single carrier
- Easily exchange connectors
- Large marking area for self-adhesive marking strips or for direct marking with permanent felt-tip pen







To adjust the mounting carrier, unlock the latch via operating tool (5.5 mm blade) and move the clamping slide to the required width by rotating the tool.



The mounting carrier is suitable for both connector widths.



PUSH WIRE® terminates the following copper conductors:
solid

PUSH WIRE® connectors in distribution boxes
During distribution box retrofits or expansions, conductors often require extensions or additional clamping points. Individual PUSH WIRE® connectors (e.g., 2273 Series) are approved as interconnect components for building wiring applications per EN 60998. Application standards for building installation (e.g., Parts 510 and 520 from DIN VDE 0100) also place the following requirements on junction box connectors:
- They must be arranged so that operation, inspection, maintenance and access to the removable connectors is simplified.
- It must be possible to test them.
- Conductors connected from outside must be clearly and permanently assigned to their associated circuits.

These requirements cannot be met with PUSH WIRE® connectors alone. In combination with WAGO mounting carriers, the PUSH WIRE® connectors clearly meet these requirements, making them comparable to rail-mount terminal blocks. Using PUSH WIRE® connectors with mounting carriers in distribution boxes is accepted by testing authorities.

For aluminum conductors, see notes in Section 14.

PUSH WIRE®

COMPACT PUSH WIRE® Connectors for Junction Boxes and Solid Conductors and Mounting Carrier

2.5 mm², 2273 Series

0.5 … 2.5 mm² "s" | 18 … 14 AWG "s" 450 V/4 kV/2 I_N 24 A 11 mm / 0.43 inch	0.5 … 2.5 mm² "s" | 18 … 14 AWG "s" 450 V/4 kV/2 I_N 24 A 11 mm / 0.43 inch	0.5 … 2.5 mm² "s" | 18 … 14 AWG "s" 450 V/4 kV/2 I_N 24 A 11 mm / 0.43 inch







Item No.	Pack. Unit	Item No.	Pack. Unit	Item No.	Pack. Unit
COMPACT PUSH WIRE® connector for junction boxes, 2-conductor connector, transparent housing, white cover, continuous service temperature (max.) 105 °C, ambient operating temperature (max.) 60 °C (T60)		COMPACT PUSH WIRE® connector for junction boxes, 3-conductor connector, transparent housing, orange cover, continuous service temperature (max.) 105 °C, ambient operating temperature (max.) 60 °C (T60)		COMPACT PUSH WIRE® connector for junction boxes, 4-conductor connector, transparent housing, red cover, continuous service temperature (max.) 105 °C, ambient operating temperature (max.) 60 °C (T60)	
2273-202	1000 (10x100)	**2273-203**	1000 (10x100)	**2273-204**	1000 (10x100)

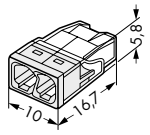

Dimensions in mm

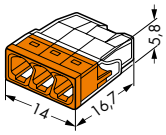

Dimensions in mm

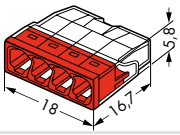

Dimensions in mm





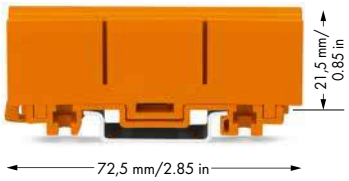

Item No.	Pack. Unit	Item No.	Pack. Unit	Item No.	Pack. Unit
COMPACT PUSH WIRE® connector for junction boxes, 5-conductor connector, transparent housing, yellow cover, continuous service temperature (max.) 105 °C, ambient operating temperature (max.) 60 °C (T60)		COMPACT PUSH WIRE® connector for junction boxes, 8-conductor connector, transparent housing, white cover, continuous service temperature (max.) 105 °C, ambient operating temperature (max.) 60 °C (T60)		Mounting carrier, for single- and double-row connectors	
2273-205	1000 (10x100)	**2273-208**	500 (10x50)	orange **2273-500**	50 (5x10)
Syringe, contains 20 ml "Alu-Plus" contact paste					
249-130	20 (4x5)				

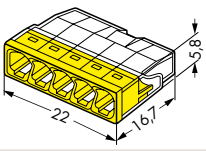

Dimensions in mm

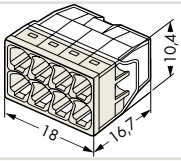

Dimensions in mm

Item-Specific Accessories

Self-adhesive marking strips, 5 mm high, 48 self-adhesive strips per card, plain

	Item No.	Pack. Unit
white	**210-334**	100

12

PUSH WIRE® Connectors for Junction Boxes, 773 Series

Description and Installation

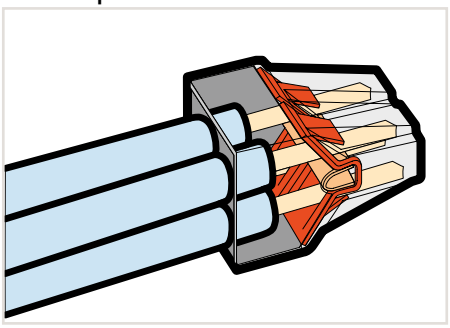

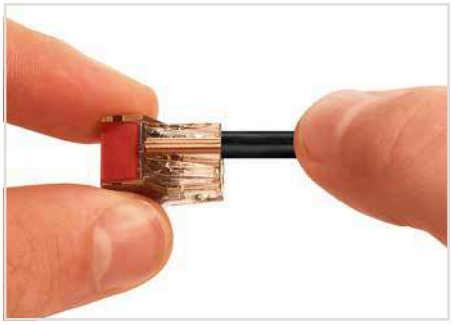

Strip solid conductor to 12 mm (0.47 inch).



Termination: Insert stripped solid conductor until it hits backstop.



Removal: Hold conductor to be removed and twist alternately left and right while pulling the connector.

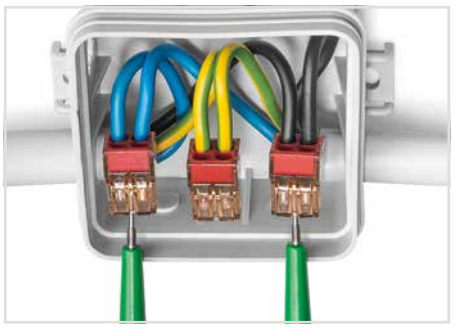

Testing via test ports opposite to conductor entry.

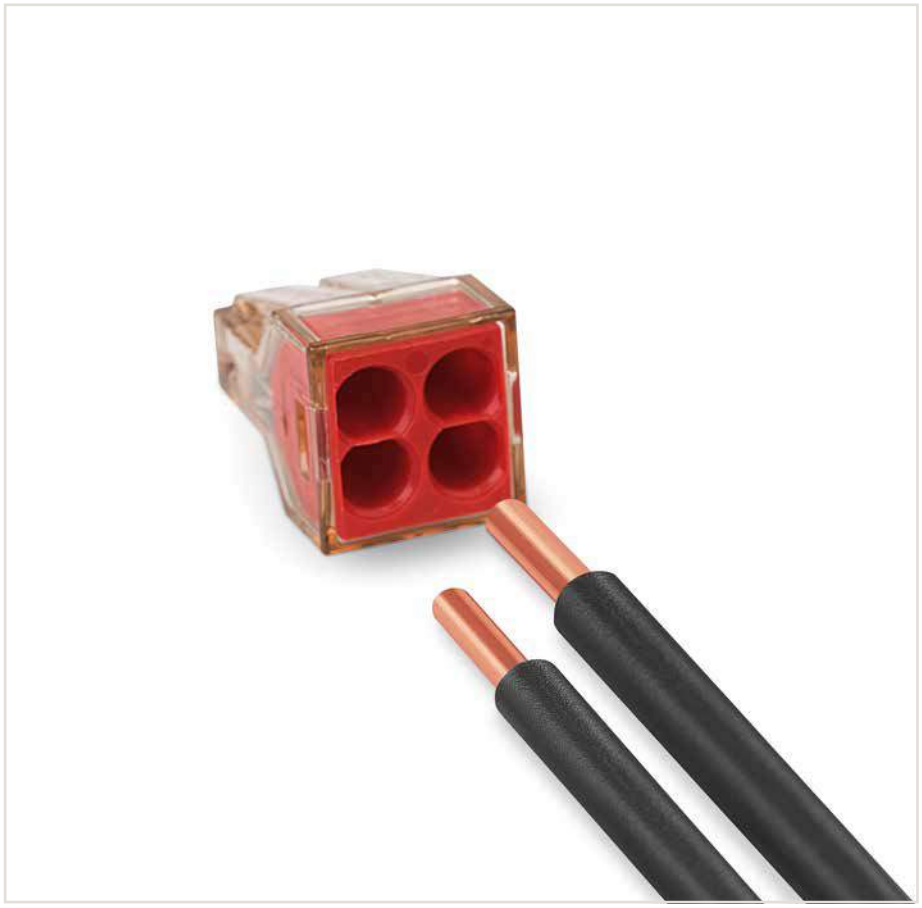

12



PUSH WIRE®
terminates the following copper conductors:
solid

For aluminum conductors, see notes in Section 14.

Mounting Carrier for PUSH WIRE® Junction Box Connectors, for DIN-35 Rail or Screw Mount

773 Series

Mounting carrier



Use the cover as an end plate.

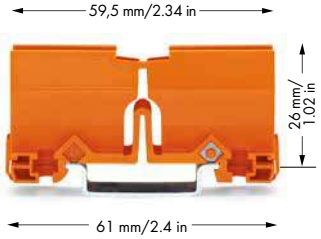

Color	Item No.	Pack. Unit
Mounting carrier, for all 773 Series PUSH WIRE® Connectors for Junction Boxes		
orange	**773-332**	50 (5x10)

Item-Specific Accessories

Self-adhesive marking strips, 5 mm high, 48 self-adhesive strips per card, plain			
	white	**210-334**	100

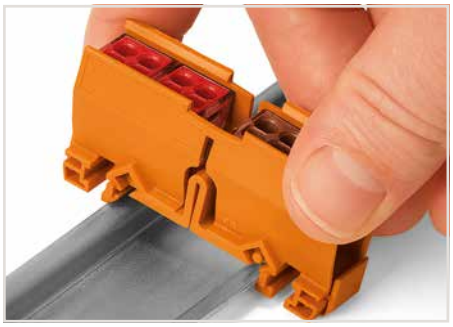

Snap the mounting carrier onto the DIN-rail.

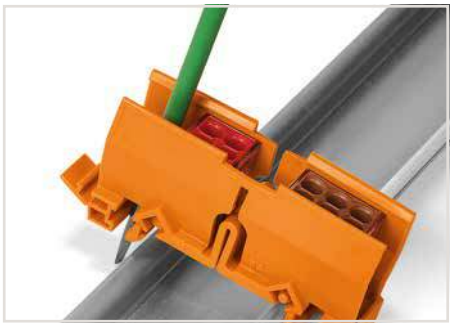

Remove the mounting carrier from the DIN-rail.

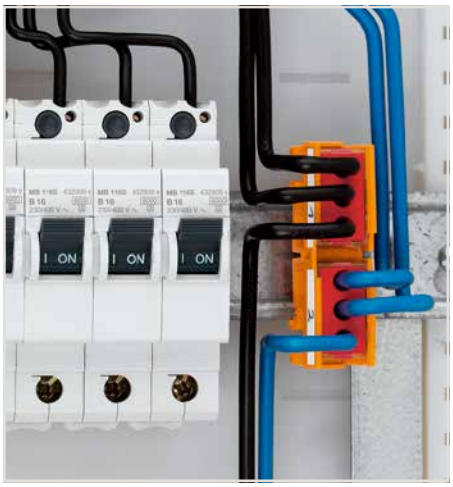

A mounting carrier (see accessories) suits applications where the connectors must be marked and secured in position. The DIN-35 rail-mount carrier fits up to two connectors and can also be mounted on a flat surface using two screws.

Using this PUSH WIRE® connector, a large range of wiring applications can be achieved in distribution or junction boxes. To mention just a few: potential multiplication and changing from or to 6 mm² conductor size.

PUSH WIRE® Connectors for Junction Boxes and Solid Conductors

4 mm², 773 Series

1.5 … 4 mm² "s" 400 V/4 kV/2 ❶ I_N 32 A 12 mm / 0.47 inch	1.5 … 4 mm² "s" 400 V/4 kV/2 ❶ I_N 32 A 12 mm / 0.47 inch	1.5 … 4 mm² "s" 400 V/4 kV/2 ❶ I_N 32 A 12 mm / 0.47 inch







Item No.	Pack. Unit	Color	Item No.	Pack. Unit	Item No.	Pack. Unit
PUSH WIRE® connector for junction boxes and solid conductors up to 4 mm², 2-conductor connector, transparent brown housing, white cover, continuous service temperature (max.) 105 °C, ambient operating temperature (max.) 60 °C		PUSH WIRE® connector for junction boxes and solid conductors up to 4 mm², 4-conductor connector, transparent brown housing, red cover, continuous service temperature (max.) 105 °C, ambient operating temperature (max.) 60 °C			PUSH WIRE® connector for junction boxes and solid conductors up to 4 mm², 6-conductor connector, transparent brown housing, brown cover, continuous service temperature (max.) 105 °C, ambient operating temperature (max.) 60 °C	
	773-602 100			**773-604** 100		**773-606** 50

773 Series Accessories

Syringe, contents 20 ml "Alu-Plus" contact paste						
	**249-130**	20 (4x5)				
Mounting carrier						
 orange	**773-332**	50 (5x10)				

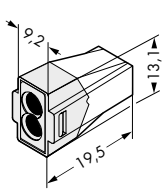

Dimensions in mm

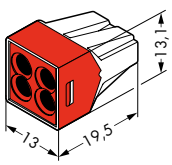

Dimensions in mm

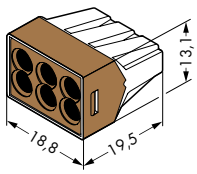

Dimensions in mm

PUSH WIRE® Connectors for Junction Boxes

2.5 mm² and 6 mm², 773 Series

0.75 … 2.5 mm² "s"	18 … 12 AWG "s"	2.5 … 6 mm² "s+st"	14 … 10 AWG "s+st"
1.5 … 2.5 mm² "st"	16 … 12 AWG "st"	400 V/4 kV/2 ❶	600 V, 20 A
400 V/4 kV/2 ❶	600 V, 20 A	I_N 41 A	600 V, 30 A
I_N 24 A	600 V, 20 A		
12 mm / 0.47 inch		12 … 13 mm / 0.47 … 0.51 inch	





❶ in grounded power lines
400 V = rated voltage
4 kV = rated surge voltage
2 = pollution degree
(see Section 14)

	Item No.	Pack. Unit
PUSH WIRE® connector for junction boxes, 4-conductor connector, continuous service temperature (max.) 150 °C, ambient operating temperature (max.) 105 °C		
black	773-514	1000 (10x100)

Color	Item No.	Pack. Unit
PUSH WIRE® connector for junction boxes, 3-conductor connector, transparent housing, red cover, continuous service temperature (max.) 105 °C, ambient operating temperature (max.) 60 °C		
	773-173	500 (10x50)

773 Series Accessories

Syringe, contains 20 ml "Alu-Plus" contact paste		
	249-130	20 (4x5)



PUSH WIRE® connectors in distribution boxes
During distribution box retrofits or expansions, conductors often require extensions or additional clamping points. Individual PUSH WIRE® connectors (e.g., 773 Series) are approved as interconnect components for building wiring applications per EN 60998. Application standards for building installation (e.g., Parts 510 and 520 from DIN VDE 0100) also place the following requirements on junction box connectors:

- They must be arranged so that operation, inspection, maintenance and access to the removable connectors is simplified.
- It must be possible to test them.
- Conductors connected from outside must be clearly and permanently assigned to their associated circuits.

These requirements cannot be met with PUSH WIRE® connectors alone. In combination with WAGO mounting carriers, the PUSH WIRE® connectors clearly meet these requirements, making them comparable to rail-mount terminal blocks. Using PUSH WIRE® connectors with mounting carriers in distribution boxes is accepted by testing authorities.

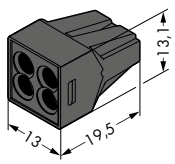

Dimensions in mm

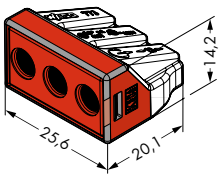

Dimensions in mm

PUSH WIRE®

Ex PUSH WIRE® Connectors for Junction Boxes

2.5 mm² and 6 mm², 773 Series

0.75 … 2.5 mm² "s" | 18 … 14 AWG "s" 16 … 12 AWG "st"	0.75 … 2.5 mm² "s" | 18 … 14 AWG "s" 16 … 12 AWG "st"	2.5 … 6 mm² "s" | 14 … 10 AWG "s"
550 V ❶	550 V ❶	550 V ❶
I_N 24 A	I_N 24 A	I_N 42 A
12 mm / 0.47 inch	12 mm / 0.47 inch	12 … 15 mm / 0.47 … 0.59 inch







Color	Item No.	Pack. Unit
PUSH WIRE® connector for junction boxes, 2-conductor connector		
◯ light gray	**773-492** ❷	1000 (10x100)

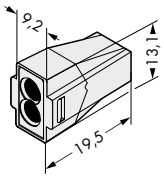

Dimensions in mm

Color	Item No.	Pack. Unit
PUSH WIRE® connector for junction boxes, 6-conductor connector		
◯ light gray	**773-496** ❷	500 (10x50)

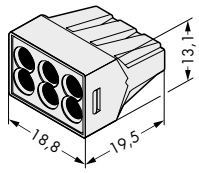

Dimensions in mm

Color	Item No.	Pack. Unit
PUSH WIRE® connector for junction boxes, 3-conductor connector		
◯ light gray	**773-493** ❷	500 (10x50)





Color	Item No.	Pack. Unit
PUSH WIRE® connector for junction boxes, 4-conductor connector		
◯ light gray	**773-494** ❷	1000 (10x100)

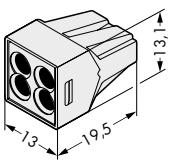

Dimensions in mm

Color	Item No.	Pack. Unit
PUSH WIRE® connector for junction boxes, 8-conductor connector		
◯ light gray	**773-498** ❷	500 (10x50)

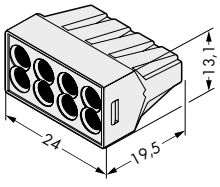

Dimensions in mm

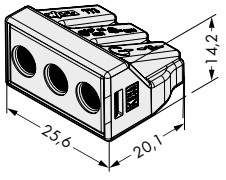

Dimensions in mm

12

Overview of certification organizations, see page 654

Mounting Carrier for PUSH WIRE® Junction Box Connectors, for DIN-35 Rail or Screw Mount

773 Series

Mounting carrier

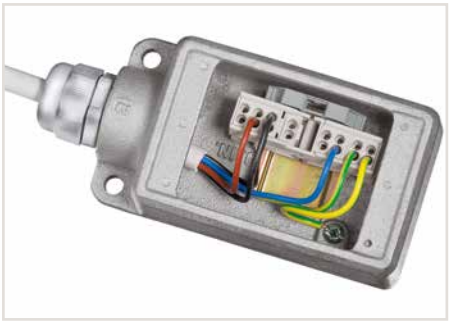

Wiring example in an Ex junction box

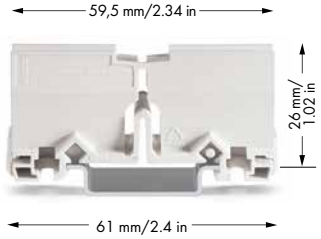

❶ 275 V at a distance < 10 mm to parts of other potentials

❷ To be used only in conjunction with a mounting carrier (773-331)

Color	Item No.	Pack. Unit
Mounting carrier, for Ex PUSH WIRE® junction box connectors		
◯ light gray	**773-331**	50 (5x10)

Item-Specific Accessories

Self-adhesive marking strips, 5 mm high, 48 self-adhesive strips per card, plain			
	white	**210-334**	100

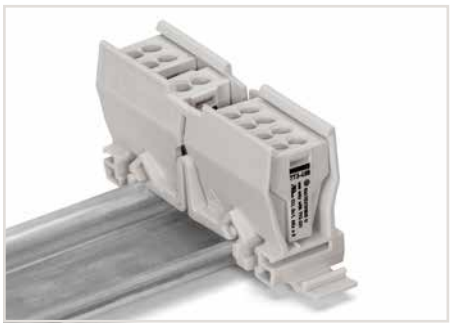

Insert the connectors into the carrier.

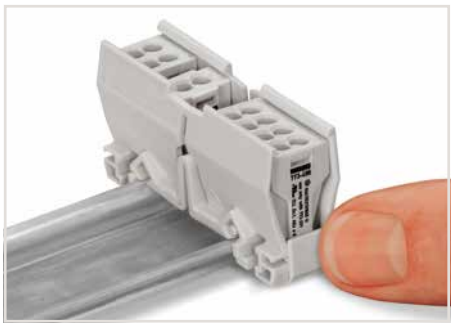

Use the cover as an end plate.



Snap the mounting carrier onto the DIN-rail.



Remove the mounting carrier from the DIN-rail.

WAGO Ex PUSH WIRE® connectors are ideal for distribution and junction boxes, as well as control and operating systems. When used in hazardous areas, they offer the following advantages over traditional connectors:

- Time- and cost-saving PUSH WIRE® connection
- Vibration-proof, maintenance-free connections
- 100 % touch-proof protection
- Connectors can be secured in position via mounting carriers
- One single carrier equipped with 2-, 4-, 6- and 8-cond. connectors holds up to 16 clamping units according to user requirements, saving materials and related costs
- Available as OEM products for manufacturers and suppliers of enclosures and distribution boxes used in hazardous areas

PUSH WIRE®

MICRO PUSH WIRE® Connectors for Junction Boxes and Solid Conductors, 243 Series

Description and Installation

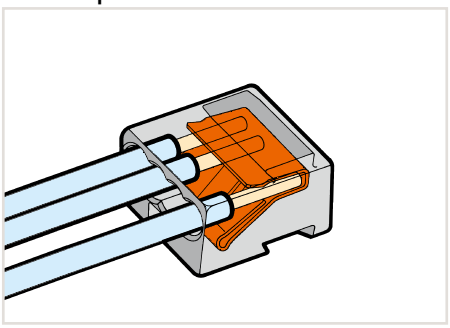

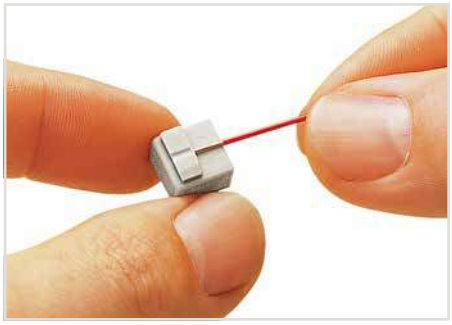

Strip solid conductors to 5 ... 6 mm (0.2 ... 0.24 inch).



Connector strips:
Assembling modular connectors into connector strips.

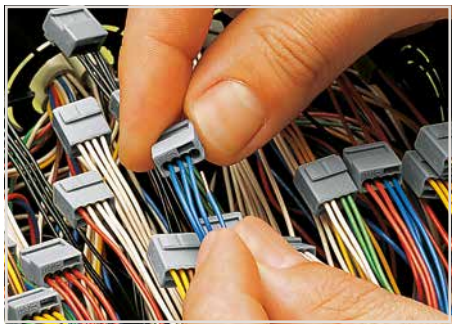

Termination: Insert stripped conductor until it hits backstop.

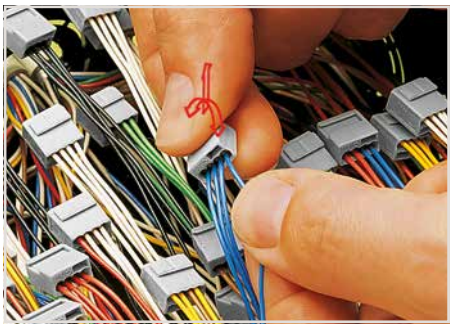

Removal: Hold conductor to be removed and twist alternately left and right while pulling the connector.



Testing via test ports opposite to conductor entry.

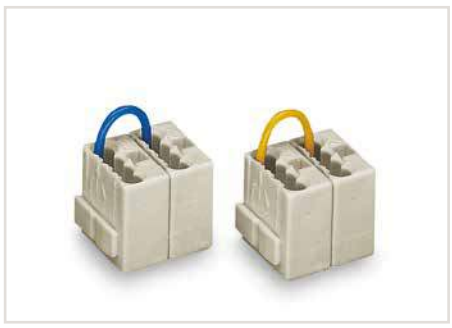

Commoned connector strips

12



PUSH WIRE®
terminates the following copper conductors:
solid

For aluminum conductors, see notes in Section 14. For push-in connectors for junction boxes for EIB applications, see Volume "Connectors and PCB Terminal Blocks."

Mounting Carrier for MICRO PUSH WIRE® Junction Box Connectors, for DIN-35 Rail or Screw Mount, 243 Series

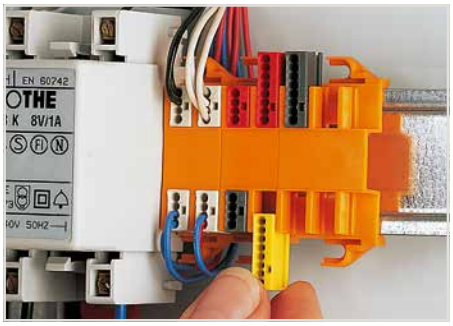

Inserting a MICRO junction box connector into the mounting carrier.

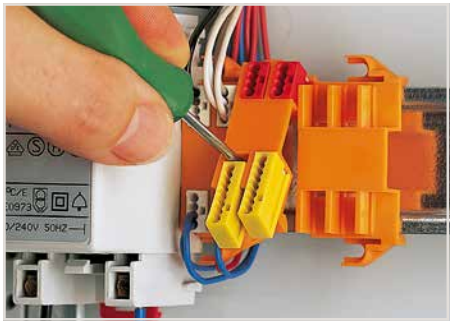

Removing a mounting carrier from the assembly.



Example of a residential door bell application – carriers mounted on a DIN-35 rail

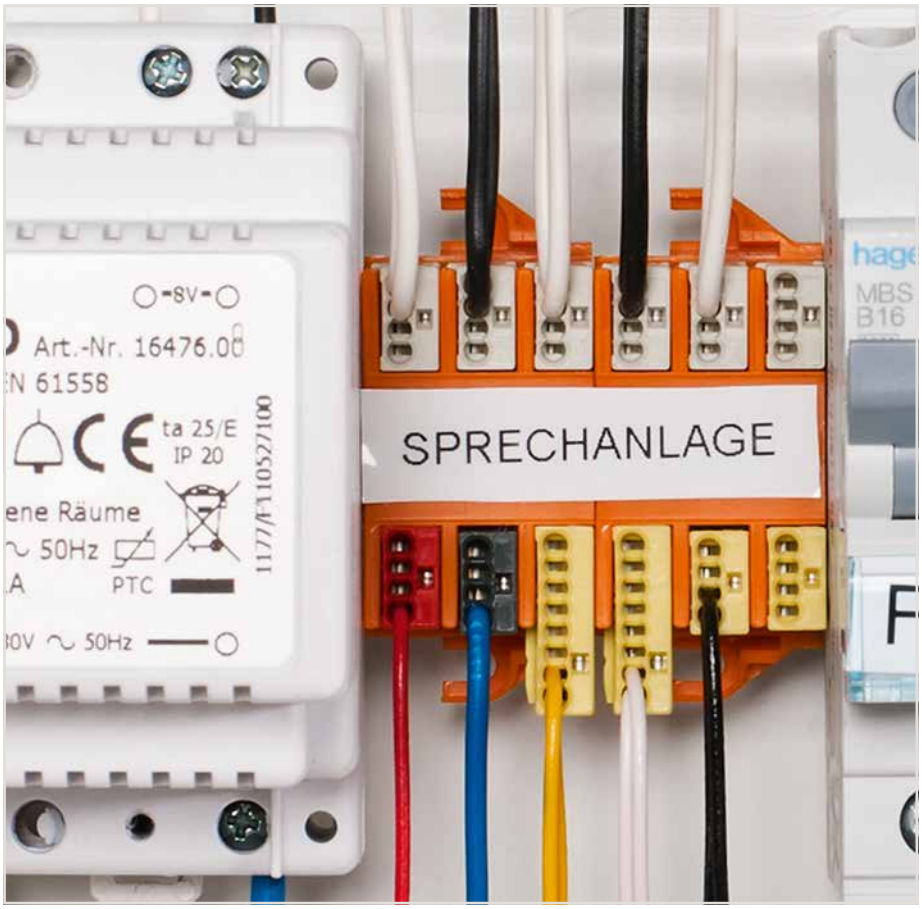

Example of a residential intercom application

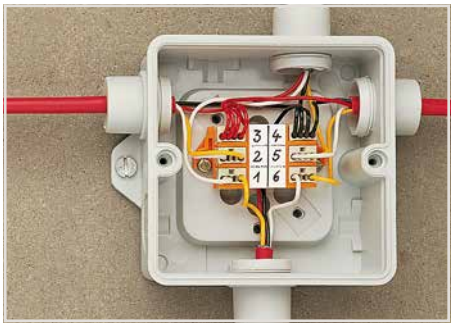

Typical application in a terminal box for burglar alarm – screw-mounted carrier

Quick Fix Mounting

Realizing MICRO PUSH WIRE® connectors for junction boxes are ideal for DIN-rail-mount panel applications, electrical installers have requested the ability to use them in distribution panels. These connectors provide easy connections for smaller conductors used in low-current applications. They are well-suited to terminating telephone-style conductors for connecting alarms, bells, door sensors, communication systems, etc.

The mounting carrier is WAGO's professional solution. It is available with mounting slots for 4 or 6 connectors.

Depending on the number of conductors, each mounting slot can accommodate a 4- or 8-conductor MICRO PUSH WIRE® connector for junction boxes. The connectors simply snap into the mounting slots and are removable, allowing conductors to be exchanged during changeover.

The carrier is designed for easy mounting directly to the DIN-35 rail, or to a panel, via the screw-mount flanges provided on both sides. A large marking area for direct marking with a permanent felt-tip pen or for pre-printed self-adhesive marking strips is provided for clear circuit identification.

PUSH WIRE®

MICRO PUSH WIRE® Connectors for Junction Boxes

0.8 mm Ø, 243 Series

0.6 … 0.8 mm Ø "s" ❶ 100 V/1.5 kV/2 ❷ I_N 6 A	22 … 20 AWG "s" 150 V, 7 A 150 V, 7 A
5 … 6 mm / 0.2 … 0.24 inch	

0.6 … 0.8 mm Ø "s" ❶ 100 V/1.5 kV/2 ❷ I_N 6 A	22 … 20 AWG "s" 150 V, 7 A 150 V, 7 A
5 … 6 mm / 0.2 … 0.24 inch	





❶ When using conductors of the same diameter, 0.5 mm (24 AWG) or 1 mm (18 AWG) diameters are also possible.

❷ 100 V = rated voltage
1.5 kV = rated surge voltage
2 = pollution degree
(see Section 14)

Color	Item No.	Pack. Unit
MICRO PUSH WIRE® connector for junction boxes, 4-conductor connector, continuous service temperature (max.) 105 °C, ambient operating temperature (max.) 60 °C		
dark gray	**243-204**	1000 (10x100)
red	**243-804**	1000 (10x100)

Color	Item No.	Pack. Unit
MICRO PUSH WIRE® connector for junction boxes, 8-conductor connector, continuous service temperature (max.) 105 °C, ambient operating temperature (max.) 60 °C		
dark gray	**243-208**	500 (10x50)
red	**243-808**	500 (10x50)

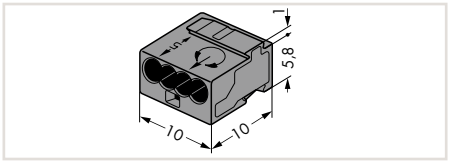

Dimensions in mm

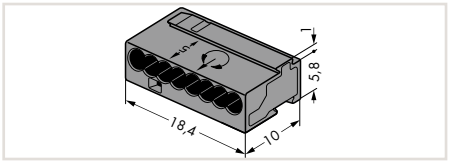

Dimensions in mm

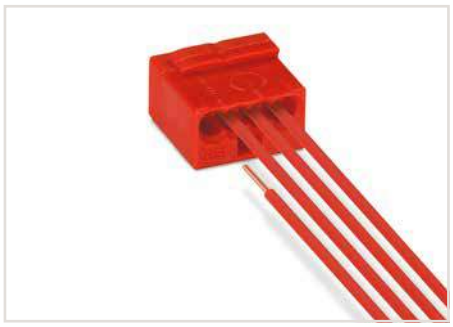

WAGO's 243 Series MICRO PUSH WIRE® Connectors for junction boxes can be used in both communication and alarm systems according to the VdS (German Association of Property Insurers) guidelines.

No general approval is given to PUSH WIRE® connectors by the VdS association. The connectors must be tested together with the different parts of the system.

The requirements for connectors are specified in the VdS guidelines for junction boxes (VdS 2116) in section 8.7: "The junction box connectors must be designed to guarantee a reliable and stable connection."

The verification of the fulfillment of these requirements is documented in the VDE test report No. 2574-1440-4031 for the insulated 243 Series PUSH WIRE® Connectors for junction boxes.





Color	Item No.	Pack. Unit
MICRO PUSH WIRE® connector for junction boxes, 4-conductor connector, continuous service temperature (max.) 105 °C, ambient operating temperature (max.) 60 °C		
light gray	**243-304**	1000 (10x100)
yellow	**243-504**	1000 (10x100)

Color	Item No.	Pack. Unit
MICRO PUSH WIRE® connector for junction boxes, 8-conductor connector, continuous service temperature (max.) 105 °C, ambient operating temperature (max.) 60 °C		
light gray	**243-308**	500 (10x50)
yellow	**243-508**	500 (10x50)

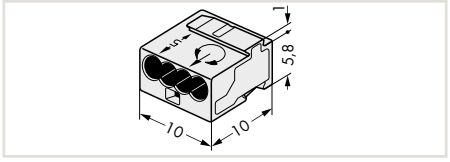

Dimensions in mm

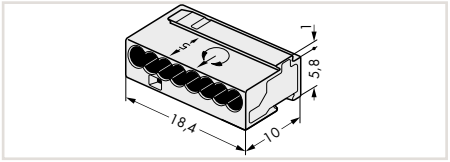

Dimensions in mm

12

Overview of certification organizations, see page 654

PUSH WIRE®

MICRO PUSH WIRE® Connectors for Junction Boxes 0.5 mm Ø and Mounting Carrier for DIN-35 Rail or Screw Mount

243 Series

0.4 … 0.5 mm Ø "s" | 26 … 24 AWG "s" 100 V/1.5 kV/2 ❶ I_N 6 A 5 … 6 mm / 0.2 … 0.24 inch	Mounting carrier



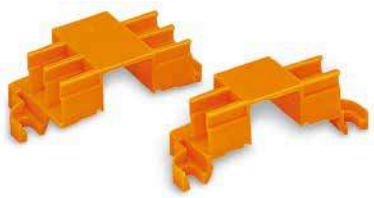

❶ 100 V = rated voltage
1.5 kV = rated surge voltage
2 = pollution degree
(see Section 14)

Color	Item No.	Pack. Unit
MICRO PUSH WIRE® connector for junction boxes, 4-conductor connector, continuous service temperature (max.) 105 °C, ambient operating temperature (max.) 60 °C		
transparent	**243-144**	1000 (10x100)

Color	Item No.	Pack. Unit
Mounting carrier, for 4 connectors		
orange	**243-112**	50 (5x10)
Mounting carrier, for 6 connectors		
orange	**243-113**	50 (5x10)

Item-Specific Accessories

Self-adhesive marking strips, 7 mm high, 6 self-adhesive strips per card, plain



Color	Item No.	Pack. Unit
white	**243-110**	100

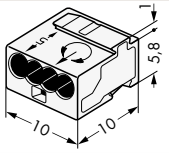

Dimensions in mm

Quick Fix Mounting

Realizing MICRO PUSH WIRE® connectors for junction boxes are ideal for DIN-rail-mount panel applications, electrical installers have requested the ability to use them in distribution panels. These connectors provide easy connections for smaller conductors used in low-current applications. They are well-suited to terminating telephone-style conductors for connecting alarms, bells, door sensors, communication systems, etc.

The mounting carrier is WAGO's professional solution. It is available with mounting slots for 4 or 6 connectors.

Depending on the number of conductors, each mounting slot can accommodate a 4- or 8-conductor MICRO PUSH WIRE® connector for junction boxes. The connectors simply snap into the mounting slots and are removable, allowing conductors to be exchanged during changeover.

The carrier is designed for easy mounting directly to the DIN-35 rail, or to a panel, via the screw-mount flanges provided on both sides. A large marking area for direct marking with a permanent felt-tip pen or for pre-printed self-adhesive marking strips is provided for clear circuit identification.

12

COMPACT Splicing Connectors for All Conductor Types, 221 Series

Description and Installation

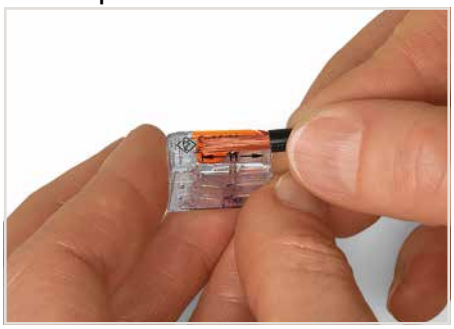

Strip conductor to 11 mm (0.43 inch).



Termination: Lift the lever to open the clamping unit and insert a stripped conductor.

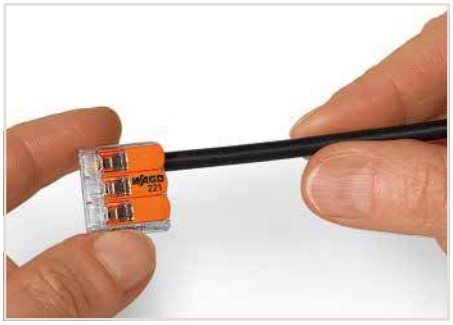

Then, lower the lever to close the clamp.

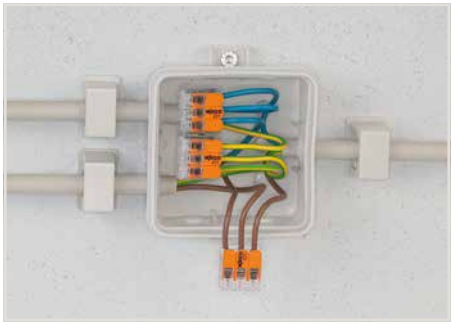

Wiring fine-stranded conductors in a junction box.



Custom low-voltage lighting system





Wiring fine-stranded conductors in a junction box.



Lighting distribution in ceiling canopy



Pendant light connection in suspended ceilings

CAGE CLAMP® terminates the following copper conductors:			
solid	stranded	fine-stranded, also with tinned single strands	fine-stranded, tip-bonded

COMPACT Splicing Connectors for All Conductor Types

4 mm², 221 Series

0.2 … 4 mm² "s+st" 0.14 … 4 mm² "f-st" 450 V/4 kV/2 ❶ I_N 32 A 11 mm / 0.43 inch	24 … 12 AWG
0.2 … 4 mm² "s+st" 0.14 … 4 mm² "f-st" 450 V/4 kV/2 ❶ I_N 32 A 11 mm / 0.43 inch	24 … 12 AWG





❶ in grounded power lines
450 V = rated voltage
4 kV = rated surge voltage
2 = pollution degree
(see Section 14)

Item No.	Pack. Unit
COMPACT splicing connector for all conductor types, 2-conductor connector, with operating levers, continuous service temperature (max.) 105 °C, ambient operating temperature (max.) 85 °C (T85)	
221-412	1000 (10x100)

Item No.	Pack. Unit
COMPACT splicing connector for all conductor types, 3-conductor connector, with operating levers, continuous service temperature (max.) 105 °C, ambient operating temperature (max.) 85 °C (T85)	
221-413	500 (10x50)

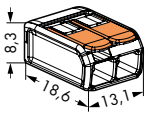

Dimensions in mm

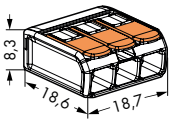

Dimensions in mm



Item No.	Pack. Unit
COMPACT splicing connector for all conductor types, 5-conductor connector, with operating levers, continuous service temperature (max.) 105 °C, ambient operating temperature (max.) 85 °C (T85)	
221-415	250 (10x25)

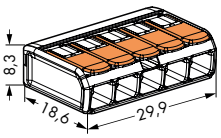

Dimensions in mm



Compact, lever-operated splicing connectors:
Tool-free connection of up to five stripped, fine-stranded conductors from 0.14 … 4 mm², as well as solid or stranded conductors from 0.2 … 4 mm² (24 … 12 AWG).

How these work:
Pull up one of the orange operating levers to open the clamping unit. Then insert the conductor and push the lever back down, flush with the connector housing.

Safety:
The specially designed rest position of the lever reliably prevents accidental unclamping of a connected conductor. Application safety, for any type of conductor (solid, stranded, fine-stranded), is confirmed by approvals like ENEC or UL.

ENEC is the European mark for electrical products that demonstrates compliance with European safety standards. The ENEC mark is subjected to the same EN standards as the VDE mark.

While the VDE mark is only permitted in Germany, the ENEC mark is accepted in more than 20 European countries.

12

Mounting Carrier, 221 Series

Types of Assembly



Inserting a connector into the mounting carrier.

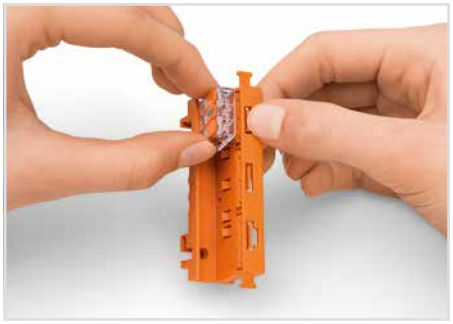

Removing a connector from the mounting carrier.

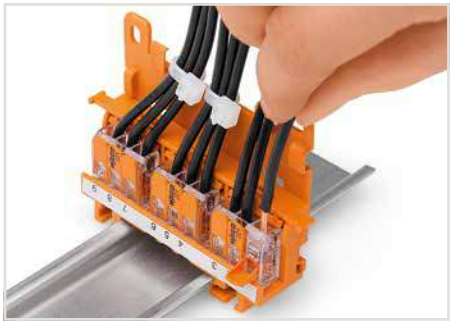

Removing a conductor.



Testing connectors via test slots on top of the carrier.

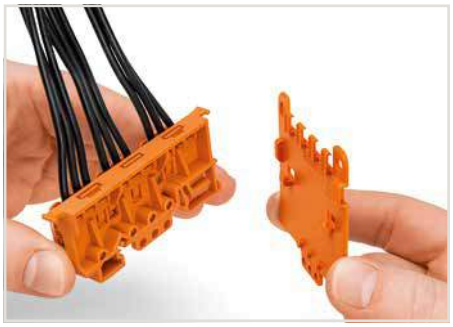

Securing a strain relief plate (222-505) to the mounting carrier.

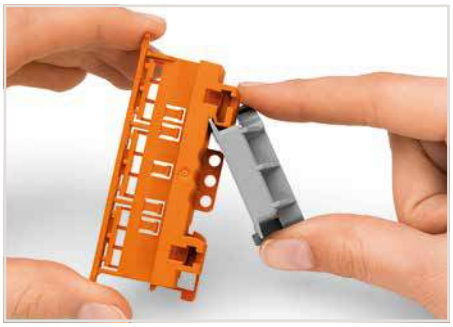

Snapping the angled DIN-rail adapter (222-510) onto the mounting carrier.



Strain relief via cable ties on the mounting carrier (transverse to the connectors' wiring direction) – clamping units labeled via marking strips (210-334).



Vertical mounting with strain relief plate on DIN-35 rail.



Horizontal mounting on DIN-35 rail using an angled DIN-rail adapter.

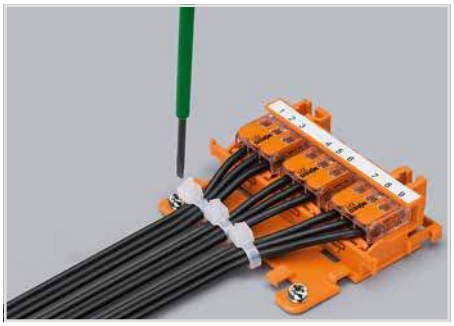

Horizontal screw mounting with strain relief plate on a flat surface



Vertical screw mounting with strain relief plate on a flat surface.

Mounting Carrier

221 Series

Mounting carrier	Strain relief plate	Angled DIN-rail adapter

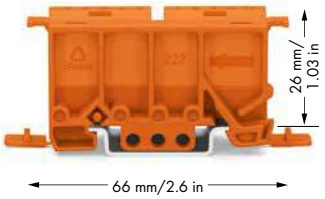

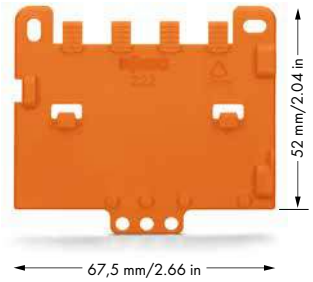

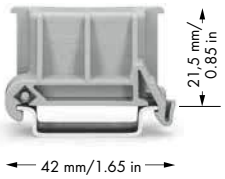

Color	Item No.	Pack. Unit
Mounting carrier, for 2-, 3- and 5-conductor splicing connectors, 17.5 mm wide		
orange	**221-500**	50 (5x10)

Color	Item No.	Pack. Unit
Strain relief plate, for 221 or 222 Series mounting carriers, snaps on to mounting carrier, 4 mm thick		
orange	**222-505**	50 (5x10)

Color	Item No.	Pack. Unit
Angled DIN-rail adapter, in combination with mounting carrier (221-500 and 222-500) for DIN-35 rail mounting, 18.5 mm wide		
gray	**222-510**	50 (5x10)

Item-Specific Accessories

Self-adhesive marking strips, 5 mm high, 48 self-adhesive strips per card, plain			
	white	**210-334**	100

Mounting Carrier for Single Connectors, 221 Series

Installation



Inserting a connector into the mounting carrier.



Removing a connector from the mounting carrier.



Inserting a conductor.



Use a cable tie to secure the conductors to the strain relief plate.

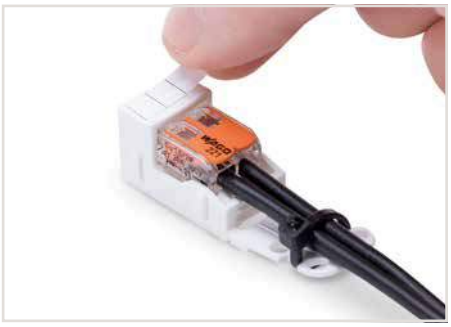

Labeling



Testing a connector mounted on the carrier via test slot.



The strain relief plate can be removed.



Horizontal screw mounting



Vertical screw mounting



Horizontal mounting via snap-in foot



Vertical mounting via snap-in foot



Connecting a light to the mains.

Mounting Carrier for Single Connectors

221 Series

Mounting carrier	Mounting carrier	Mounting carrier
		

Color	Item No.	Pack. Unit
Mounting carrier, for 2-conductor connectors, for screw mounting		
Dimensions from the surface (mm) W x H x D		
18.1 x 16.9 x 52.8		
More information on dimensions is available upon request.		
○ white	**221-502**	50 (5x10)
● black	**221-502/000-004**	50 (5x10)
Mounting carrier, for 2-conductor connectors, with snap-in mounting foot for horizontal mounting		
Dimensions from the surface (mm) W x H x D		
18.1 x 16.9 (+ 4.5 snap-in mounting foot) x 52.8		
More information on dimensions is available upon request.		
○ white	**221-512**	50 (5x10)
● black	**221-512/000-004**	50 (5x10)
Mounting carrier, for 2-conductor connectors, with snap-in mounting foot for vertical mounting		
Dimensions from the surface (mm) W x H x D		
18.1 x 52.8 (+ 4.5 snap-in mounting foot) x 16.9		
More information on dimensions is available upon request.		
○ white	**221-522**	50 (5x10)
● black	**221-522/000-004**	50 (5x10)

Color	Item No.	Pack. Unit
Mounting carrier, for 3-conductor connectors, for screw mounting		
Dimensions from the surface (mm) W x H x D		
23.7 x 16.9 x 52.8		
More information on dimensions is available upon request.		
○ white	**221-503**	50 (5x10)
● black	**221-503/000-004**	50 (5x10)
Mounting carrier, for 3-conductor connectors, with snap-in mounting foot for horizontal mounting		
Dimensions from the surface (mm) W x H x D		
23.7 x 16.9 (+ 4.5 snap-in mounting foot) x 52.8		
More information on dimensions is available upon request.		
○ white	**221-513**	50 (5x10)
● black	**221-513/000-004**	50 (5x10)
Mounting carrier, for 3-conductor connectors, with snap-in mounting foot for vertical mounting		
Dimensions from the surface (mm) W x H x D		
23.7 x 52.8 (+ 4.5 snap-in mounting foot) x 16.9		
More information on dimensions is available upon request.		
○ white	**221-523**	50 (5x10)
● black	**221-523/000-004**	50 (5x10)

Color	Item No.	Pack. Unit
Mounting carrier, for 5-conductor connectors, for screw mounting		
Dimensions from the surface (mm) W x H x D		
35 x 16.9 x 52.8		
More information on dimensions is available upon request.		
○ white	**221-505**	50 (5x10)
● black	**221-505/000-004**	50 (5x10)
Mounting carrier, for 5-conductor connectors, with snap-in mounting foot for horizontal mounting		
Dimensions from the surface (mm) W x H x D		
35 x 16.9 (+ 4.5 snap-in mounting foot) x 52.8		
More information on dimensions is available upon request.		
○ white	**221-515**	50 (5x10)
● black	**221-515/000-004**	50 (5x10)
Mounting carrier, for 5-conductor connectors, with snap-in mounting foot for vertical mounting		
Dimensions from the surface (mm) W x H x D		
35 x 52.8 (+ 4.5 snap-in mounting foot) x 16.9		
More information on dimensions is available upon request.		
○ white	**221-525**	50 (5x10)
● black	**221-525/000-004**	50 (5x10)

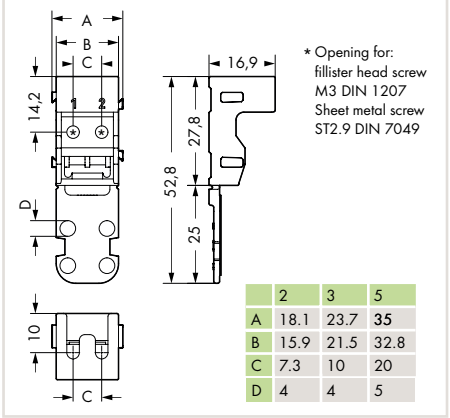

	2	3	5
A	18.1	23.7	35
B	15.9	21.5	32.8
C	7.3	10	20
D	4	4	5

Dimensions in mm

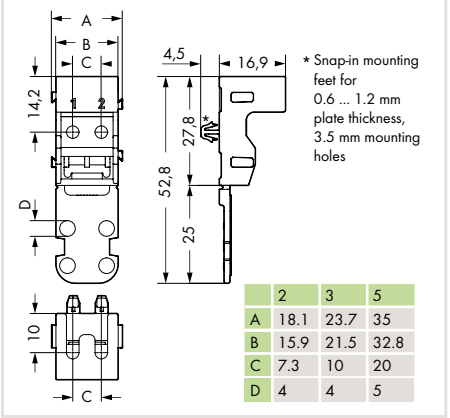

	2	3	5
A	18.1	23.7	35
B	15.9	21.5	32.8
C	7.3	10	20
D	4	4	5

Dimensions in mm

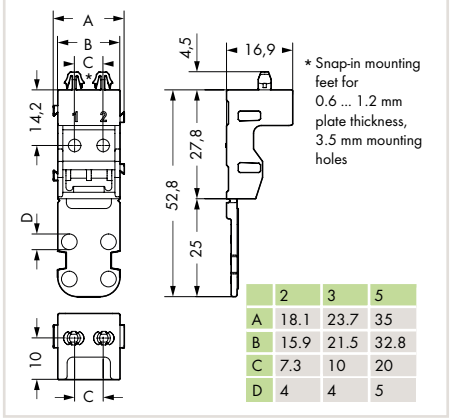

	2	3	5
A	18.1	23.7	35
B	15.9	21.5	32.8
C	7.3	10	20
D	4	4	5

Dimensions in mm

CLASSIC Splicing Connectors for All Conductor Types, 222 Series

Description and Installation

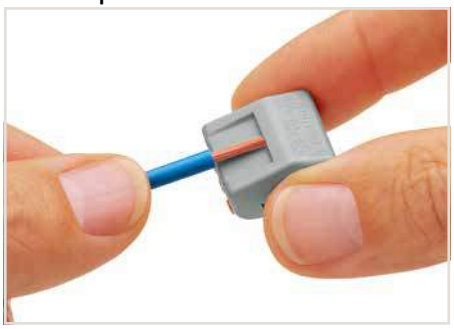

Strip conductor to 9 ... 10 mm (0.35 ... 0.39 inch).

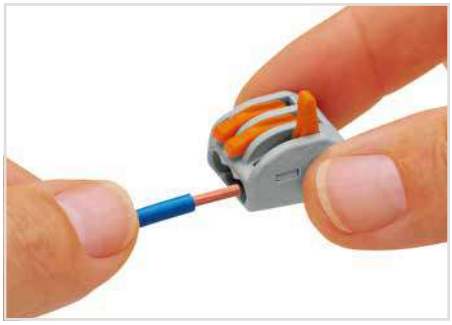

Termination: Lift the lever to open the clamping unit and insert a stripped conductor.



Then, lower the lever to close the clamp.

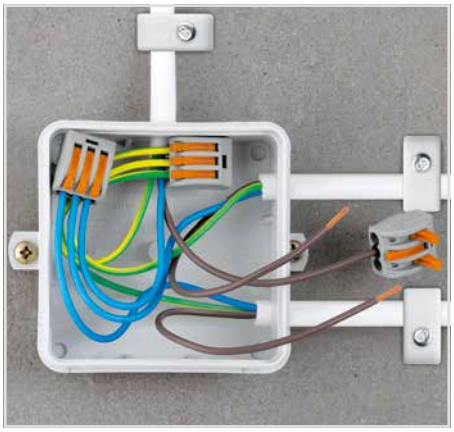

Wiring fine-stranded conductors in a junction box.

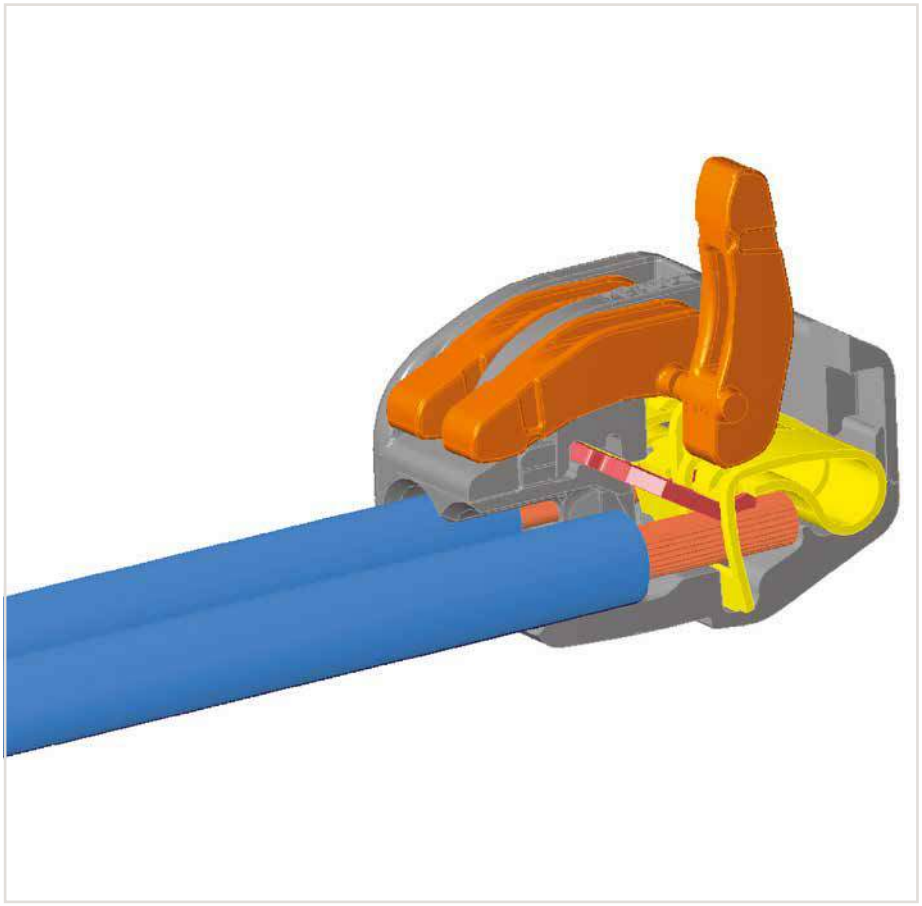



Testing the wired connectors.

CAGE CLAMP® terminates the following copper conductors:					
solid	stranded	fine-stranded, also with tinned single strands	fine-stranded, tip-bonded	fine-stranded, with ferrule (gastight crimped)	fine-stranded, with pin terminal (gastight crimped)

For aluminum conductors, see notes in Section 14. When using ferrules, the max. conductor cross section accommodated is one size smaller than max. rating of terminal block.

CAGE CLAMP®

CLASSIC Splicing Connectors for All Conductor Types

2.5 mm², 222 Series

0.08 … 2.5 mm² "s+st" / 0.08 … 4 mm² "f-st" / 400 V/4 kV/2 ❶ / I_N 32 A / 9 … 10 mm / 0.35 … 0.39 inch	28 … 12 AWG"s+f-st" / 28 … 12 AWG"f-st" / 600 V, 20 A
0.08 … 2.5 mm² "s+st" / 0.08 … 4 mm² "f-st" / 400 V/4 kV/2 ❶ / I_N 32 A / 9 … 10 mm / 0.35 … 0.39 inch	28 … 12 AWG"s+f-st" / 28 … 12 AWG"f-st" / 600 V, 20 A





❶ in grounded power lines
400 V = rated voltage
4 kV = rated surge voltage
2 = pollution degree
(see Section 14)

Color	Item No.	Pack. Unit
CLASSIC splicing connector, 2-conductor connector, with operating levers, continuous service temperature (max.) 85 °C, ambient operating temperature (max.) 40 °C		
gray	**222-412**	500 (10x50)

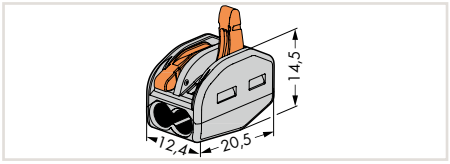

Dimensions in mm

Color	Item No.	Pack. Unit
CLASSIC splicing connector, 3-conductor connector, with operating levers, continuous service temperature (max.) 85 °C, ambient operating temperature (max.) 40 °C		
gray	**222-413**	500 (10x50)

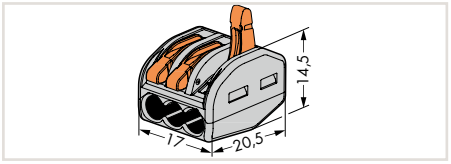

Dimensions in mm



Color	Item No.	Pack. Unit
CLASSIC splicing connector, 5-conductor connector, with operating levers, continuous service temperature (max.) 85 °C, ambient operating temperature (max.) 40 °C		
gray	**222-415**	400 (10x40)

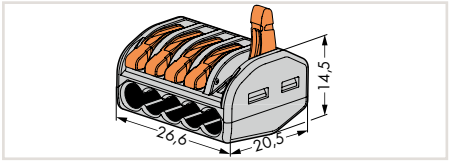

Dimensions in mm



Compact, lever-operated splicing connectors:
Tool-free connection of up to five stripped, fine-stranded conductors from 0.08 … 4 mm² (28 … 12 AWG), as well as solid or stranded conductors up to 2.5 mm² (12 AWG).

This is how it works:
Pull up one of the orange operating levers to open the clamping unit so that the lever engages and keeps the clamp in its opened position. Then insert the conductor and push the lever back down, flush with the connector housing.

Safety:
The specially designed rest position of the lever reliably prevents accidental unclamping of a connected conductor. Application safety, for any type of conductor (solid, stranded, fine-stranded), is confirmed by approvals like ENEC or UL.

ENEC is the European mark for electrical products that demonstrates compliance with European safety standards. The ENEC mark is subjected to the same EN standards as the VDE mark.

While the VDE mark is only permitted in Germany, the ENEC mark is accepted in more than 20 European countries.

12

Mounting Carrier, 222 Series

Types of Assembly



Horizontal mounting on DIN-35 rail using an angled DIN-rail adapter.



Horizontal mounting with strain relief plate on DIN-35 rail using an angled DIN-rail adapter.

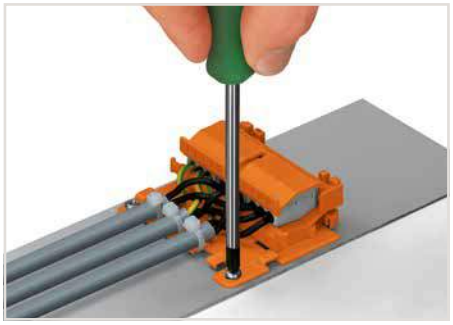

Horizontal screw mounting with strain relief plate on a flat surface



Vertical mounting with strain relief plate on DIN-35 rail. Marking clamping units via marking strips.



Strain relief via cable ties on the mounting carrier (transverse to the connectors' wiring direction) – Molded marking clamping units

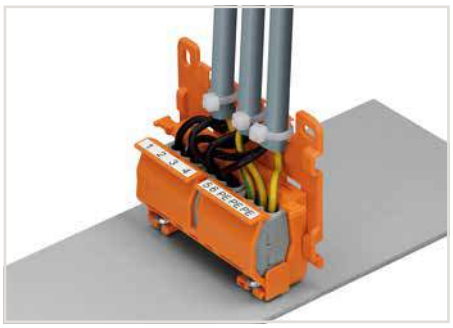

Mounting carrier with strain relief plate mounted vertically on a plate.
Round cable secured via strain relief lug.



Snapping the lateral connector safety lock onto the mounting carrier.

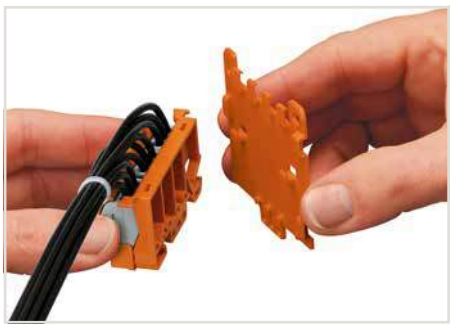

Securing a strain relief plate to the mounting carrier.

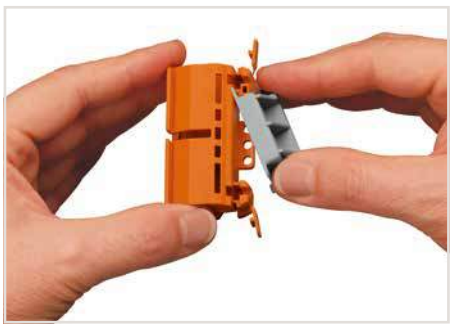

Snapping the angled DIN-rail adapter onto the mounting carrier.

Mounting Carrier

222 Series

Mounting carrier	Strain relief plate	Angled DIN-rail adapter

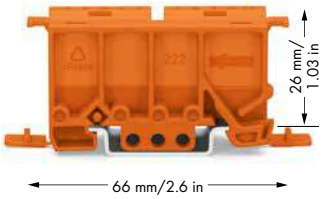

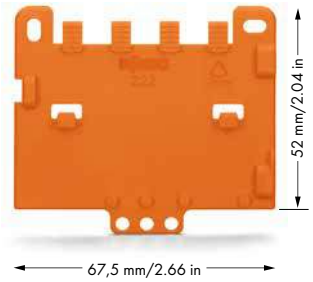

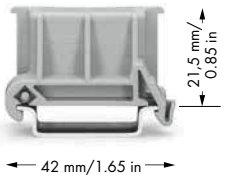

Color	Item No.	Pack. Unit
Mounting carrier, for 2-, 3- and 5-conductor splicing connectors, 22 mm wide		
orange	**222-500**	50 (5x10)

Item-Specific Accessories

Self-adhesive marking strips, 5 mm high, 48 self-adhesive strips per card, plain			
	white	**210-334**	100

Color	Item No.	Pack. Unit
Strain relief plate, for 221 or 222 Series mounting carriers, snaps on to mounting carrier, 4 mm thick		
orange	**222-505**	50 (5x10)

Color	Item No.	Pack. Unit
Angled DIN-rail adapter, in combination with mounting carrier (221-500 and 222-500) for DIN-35 rail mounting, 18.5 mm wide		
gray	**222-510**	50 (5x10)

12

Vario-T-BOXX and L-BOXX® 102
The COMPACT Splicing Connector Line-Up
887 Series

Vario-T-BOXX	L-BOXX® 102, the COMPACT splicing connector line-up	





Item No.		Pack. Unit
Vario-T-BOXX		
887-912		1
COMPACT PUSH WIRE® Connectors for Junction Boxes		
3 x 0.5 … 2.5 mm²	2273-203	100
5 x 0.5 … 2.5 mm²	2273-205	100
8 x 0.5 … 2.5 mm²	2273-208	50
COMPACT Splicing Connectors		
3 x 0.14 … 4 mm²	221-413	50
5 x 0.14 … 4 mm²	221-415	25
Lighting Connectors		
2 x 1 … 2.5 mm² "s"	224-112	100
PUSH WIRE® Connectors for Junction Boxes		
1.5 … 4 mm² "s"	773-604	100
MICRO PUSH WIRE® Connectors for Junction Boxes		
4 x 0.6 … 0.8 mm Ø	243-204	100
4 x 0.6 … 0.8 mm Ø	243-804	100
8 x 0.6 … 0.8 mm Ø	243-208	50
Mounting Carrier		
for 6 Connectors	243-113	10

Item No.			Pack. Unit
L-BOXX® 102, the COMPACT splicing connector line-up			
887-913			1
COMPACT PUSH WIRE® Connectors for Junction Boxes			
orange	3 x 0.5 … 2.5 mm²	2273-203	100
yellow	5 x 0.5 … 2.5 mm²	2273-205	100
light gray	8 x 0.5 … 2.5 mm²	2273-208	50
COMPACT Splicing Connectors			
transparent	2 x 0.14 … 4 mm²	221-412	100
transparent	3 x 0.14 … 4 mm²	221-413	50
transparent	5 x 0.14 … 4 mm²	221-415	25
Lighting Connectors			
white	2 x 1 … 2.5 mm² "s"	224-112	100
PUSH WIRE® Connectors for Junction Boxes			
red	2.5 … 6 mm² "s+str"	773-173	50
MICRO PUSH WIRE® Connectors for Junction Boxes			
dark gray	4 x 0.6 … 0.8 mm Ø	243-204	100
dark gray	8 x 0.6 … 0.8 mm Ø	243-208	50
Mounting Carrier			
orange		221-500	4

PUSH WIRE® / CAGE CLAMP®

Lighting Connectors, 224 Series
Lighting Side and Installation Side
Description and Installation

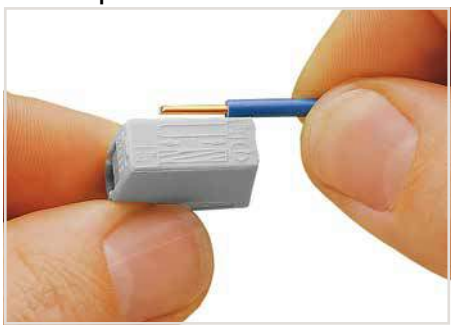

Strip conductor to 9 ... 11 mm (0.35 ... 0.43 inch).



To connect: Press button fully, insert stripped conductor into square entry and release.

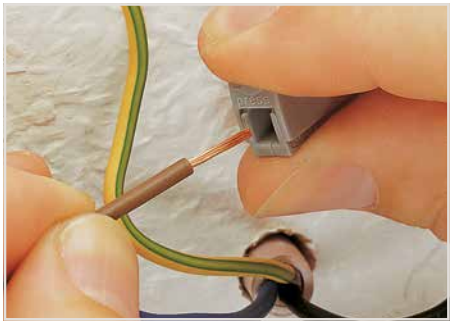

To remove: Press button and withdraw conductor.

Lighting Side

CAGE CLAMP® terminates the following copper conductors:



solid



stranded



fine-stranded, also with tinned single strands



fine-stranded, tinned (up to 1.5 mm² / 16 AWG)



fine-stranded, tip bonded



fine-stranded with ferrule (up to 1.5 mm² / 16 AWG)

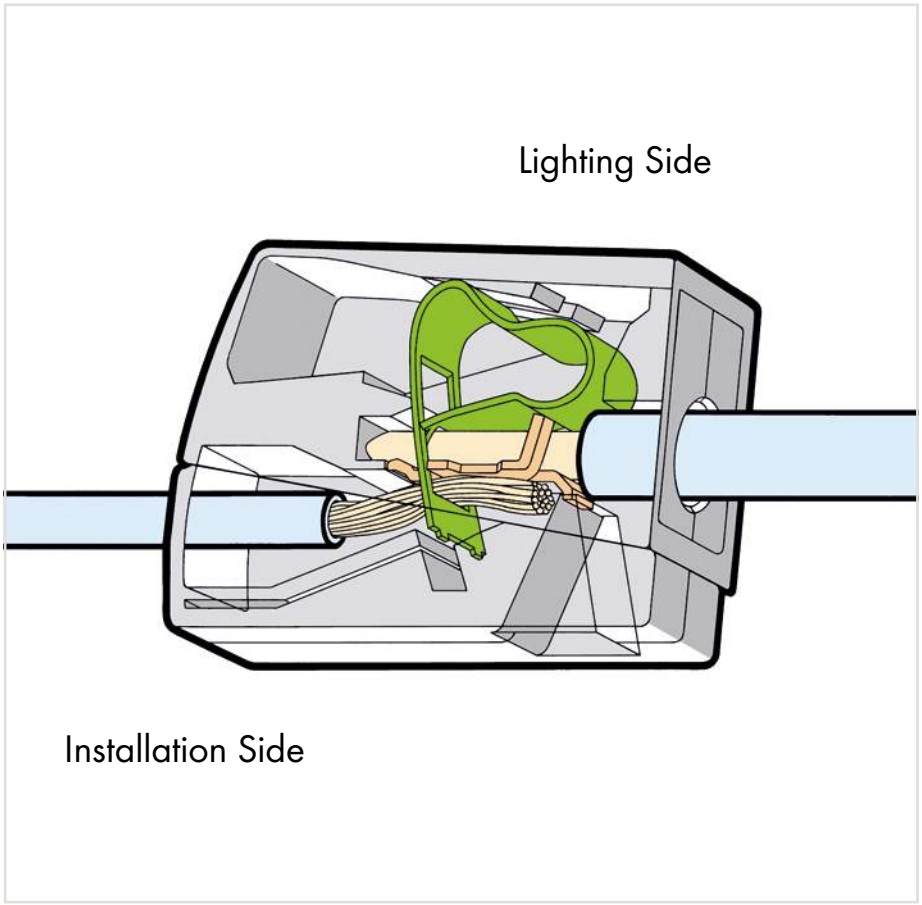

12

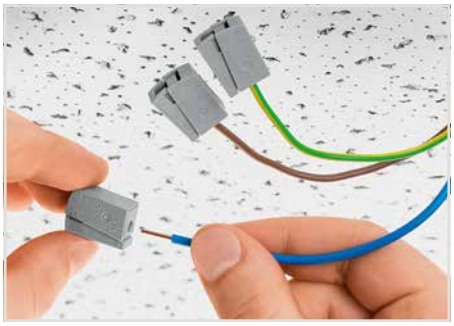

To connect: Insert stripped solid conductor into circular entry and push until it hits the backstop.

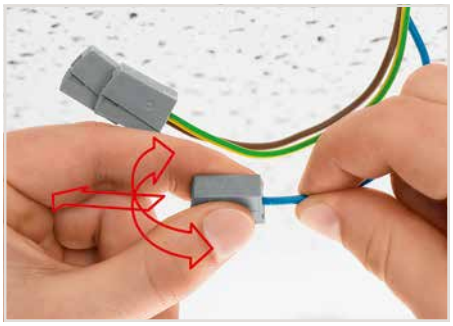

To remove: Hold conductor to be removed and twist alternately left and right while slightly pulling the connector.



Testing via separate test ports.



Installation Side

PUSH WIRE® terminates the following copper conductors:
solid

For aluminum conductors, see notes in Section 14.

Lighting and "Service" Connectors

2.5 mm², 224 Series

Installation side	**Installation side**	**0.5 … 2.5 mm² "s+f-st"** | **20 … 16 AWG**
1 … 2.5 mm² "s" | **14 … 12 AWG**	**1 … 2.5 mm² "s"** | **14 … 12 AWG**	**400 V/4 kV/2** | **300 V, 20 A**
Lighting side	**Lighting side**	**I_N 24 A**
0.5 … 2.5 mm² "s+f-st" | **20 … 16 AWG**	**0.5 … 2.5 mm² "s+f-st"** | **20 … 16 AWG**	
400 V/4 kV/2; 24 A | **300 V, 20 A**	**400 V/4 kV/2; 24 A** | **300 V, 20 A**	
9 … 11 mm / 0.35 … 0.43 inch	**9 … 11 mm / 0.35 … 0.43 inch**	**9 … 11 mm / 0.35 … 0.43 inch**







Color	Item No.	Pack. Unit
Lighting connector, standard version, continuous service temperature (max.) 105 °C, ambient operating temperature (max.) 60 °C		
gray	**224-101**	1000 (10x100)
Lighting connector, version for increased continuous service temperature of 120°C, ambient operating temperature (max.) 75 °C		
black	**224-104**	100

Color	Item No.	Pack. Unit
2-conductor lighting connector, standard version, continuous service temperature (max.) 105 °C, ambient operating temperature (max.) 60 °C		
white	**224-112**	1000 (10x100)
2-conductor lighting connector, version for increased continuous service temperature of 120°C, ambient operating temperature (max.) 75 °C		
black	**224-114**	100

Color	Item No.	Pack. Unit
"Service" connector		
gray	**224-201**	50

224 Series Accessories

Syringe, contains 20 ml "Alu-Plus" contact paste		
	**249-130**	20 (4x5)

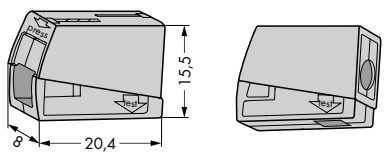

Dimensions in mm

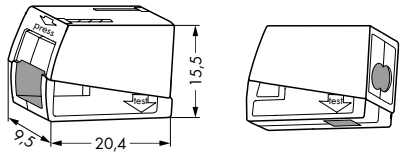

Dimensions in mm

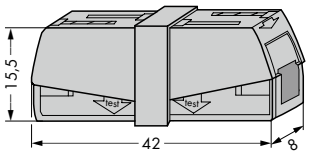

Dimensions in mm

PUSH WIRE®

Luminaire Disconnect Connectors (U.S. Version),
12 AWG, 873 Series

2-conductor plug ❶	1-conductor socket ❷	2-conductor plug ❶	1-conductor socket ❷
18 … 12 AWG “s”	18 AWG “s”	18 … 12 AWG “s”	18 AWG “s”
16 … 12 AWG “st”	600 V, 6 A	16 … 12 AWG “st”	600 V, 6 A
11 … 13 mm / 0.43 … 0.51 inch ❶		11 … 13 mm / 0.43 … 0.51 inch ❶	
9 … 11 mm / 0.35 … 0.43 inch ❷		9 … 11 mm / 0.35 … 0.43 inch ❷	



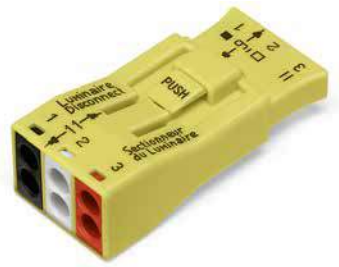

❶ 2-conductor plug
❷ 1-conductor socket

Pole No.	Item No.	Pack. Unit
Luminaire disconnect connector		
2	**873-902**	40

Pole No.	Item No.	Pack. Unit
Luminaire disconnect connector		
3	**873-903**	20

Touchproof connectors are required for ballast supply cables in the USA and Canada. When exchanging a ballast:
1. The touch-proof plug-in connection is disconnected first
2. The ballast is replaced
3. Network connection is restored by plugging the connection.

This streamlines ballast replacement while enhancing safety by safeguarding the installer from electric shock. The 873 Series connectors are approved according to UL 2459 and CSA 22.2 for this type of application.

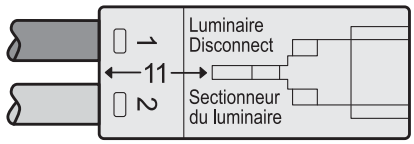

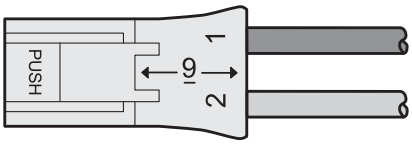

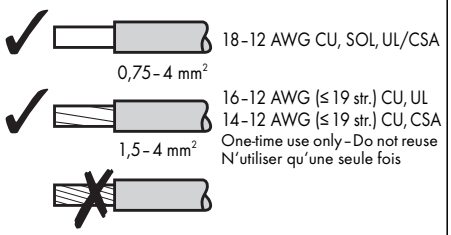

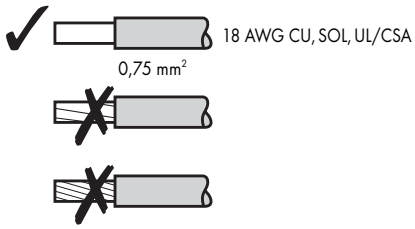

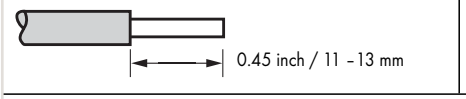

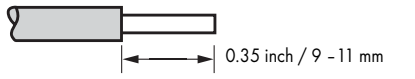

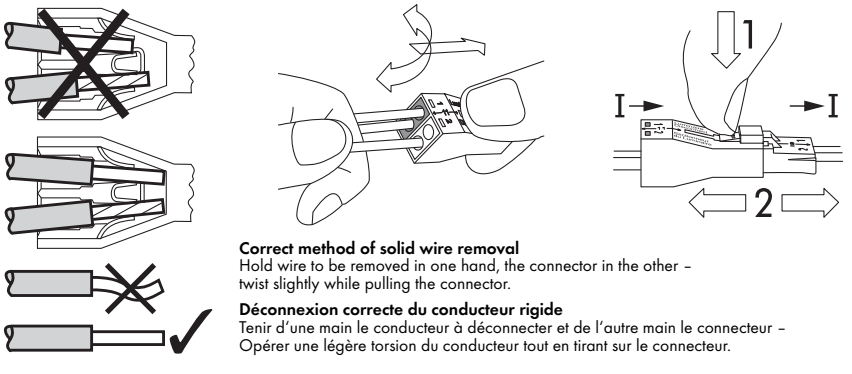

Correct method of solid wire removal
Hold wire to be removed in one hand, the connector in the other – twist slightly while pulling the connector.

Déconnexion correcte du conducteur rigide
Tenir d’une main le conducteur à déconnecter et de l’autre main le connecteur – Opérer une légère torsion du conducteur tout en tirant sur le connecteur.

873 Series approvals per EN 60998 and EN 61984:

EN 60998
0.75 mm² (solid), 6 A for socket
1.5 … 4 mm² (solid), 32 A for plug
400 V/4 kV/2

EN 61984
0.75 mm² (solid), 6 A for socket
0.75 … 4 mm² (solid), 32 A for plug
400 V/4 kV/2

12

Overview of certification organizations, see page 654

PUSH WIRE®

Luminaire Disconnect Connectors (U.S. Version),
12 AWG, 873 Series

2-conductor plug ❶	1-conductor socket ❷
18 … 12 AWG “s”	18 AWG “s”
16 … 12 AWG “st”	600 V, 6 A
11 … 13 mm / 0.43 … 0.51 inch ❶	
9 … 11 mm / 0.35 … 0.43 inch ❷	



❶ 2-conductor plug
❷ 1-conductor socket

Pole No.	Item No.	Pack. Unit
Luminaire disconnect connector, preceding ground contact, center position		
3	**873-953**	500

Touchproof connectors are required for ballast supply cables in the USA and Canada. When exchanging a ballast:
1. The touch-proof plug-in connection is disconnected first
2. The ballast is replaced
3. Network connection is restored by plugging the connection.

This streamlines ballast replacement while enhancing safety by safeguarding the installer from electric shock. The 873 Series connectors are approved according to UL 2459 and CSA 22.2 for this type of application.

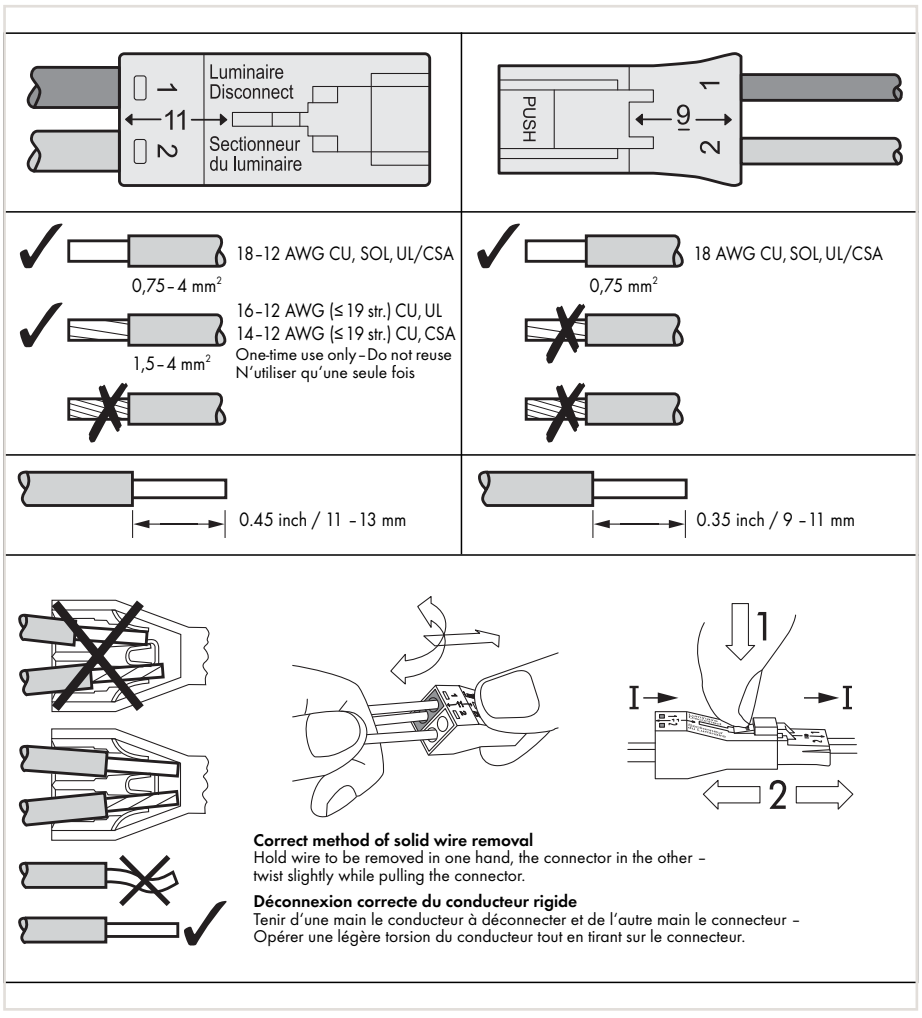

873 Series approvals per EN 60998 and EN 61984:

EN 60998
0.75 mm² (solid), 6 A for socket
1.5 … 4 mm² (solid), 32 A for plug
400 V/4 kV/2

EN 61984
0.75 mm² (solid), 6 A for socket
0.75 … 4 mm² (solid), 32 A for plug
400 V/4 kV/2

12



Accessories and Tools

Shield Connection Systems, Marking Systems, Accessories and Tools

			Page
	**Shield Clamping Saddles**	790 Series	556
	**Spring-Equipped Shield Clamping Saddles**	790 Series	559
	**Busbar Carriers**	790 Series	562
	**Marking Systems**		566
	**End Stops for DIN-35 and DIN-15 Rails**		588
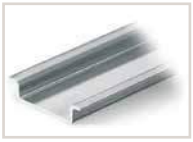	**Carrier Rails, Collective Jumper Carriers and Rail-Mount Terminal Block Covers**		590
	**Operating Tools**		596
	**Stripping Tools**		599
	**Crimping Tools for Ferrules**		600
	**Cable Cutter**		603
	**Test and Measurement Devices**		606

Shield Connection System, 790 Series

Description and Installation



Carrier with grounding foot* (790-113), 45 mm long, busbar 90° to the rail

* for all sizes of shield clamping saddles



Carrier with grounding foot* (790-114), 45 mm long, busbar parallel to the rail

* for all sizes of shield clamping saddles

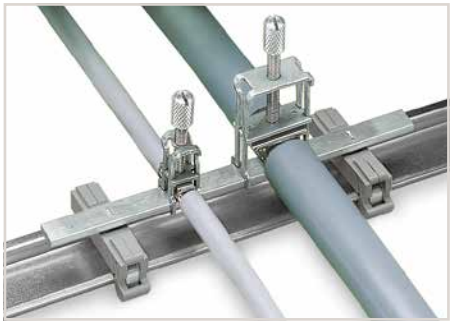

Carrier with grounding foot* (790-115), 125 mm long, busbar parallel to the rail

* for all sizes of shield clamping saddles

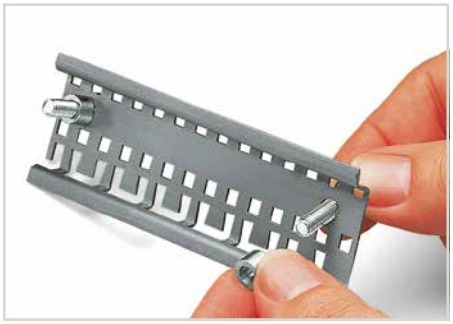

Fitting a spacer sleeve to a specialty slotted carrier rail.

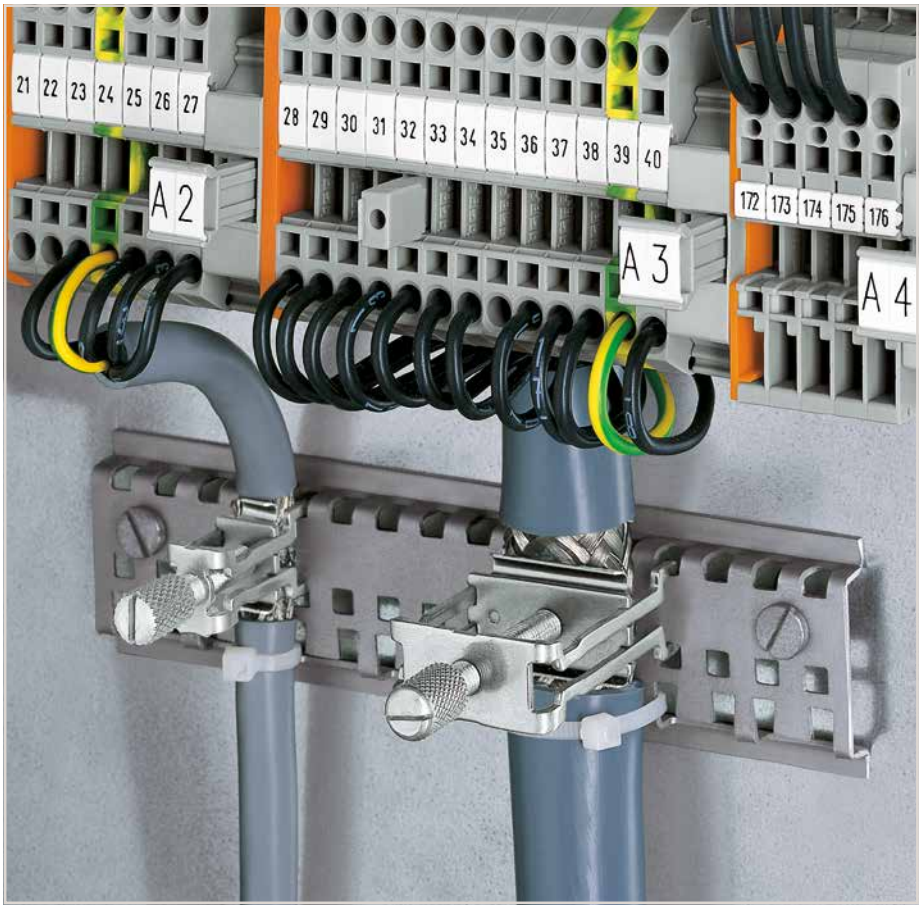

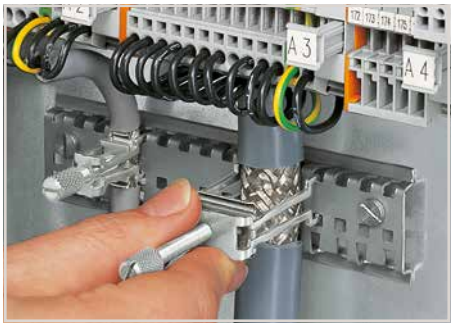

Fitting an additional clamping saddle.

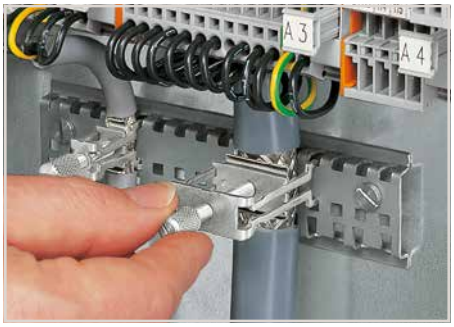

Tightening/removing a shield clamping saddle.



After connection, tighten the knurled screw to complete the installation.
Recommended tightening torque: 0.5 Nm



To remove the clamping saddle, unscrew until ratcheted mechanism is released, then slightly tip saddle and remove the clamping saddle.

Shield Connection System, 790 Series

Installation



Carrier with grounding foot – busbar parallel to the rail



Insulated mounting carriers for a common shield reference potential, independent of housing potential

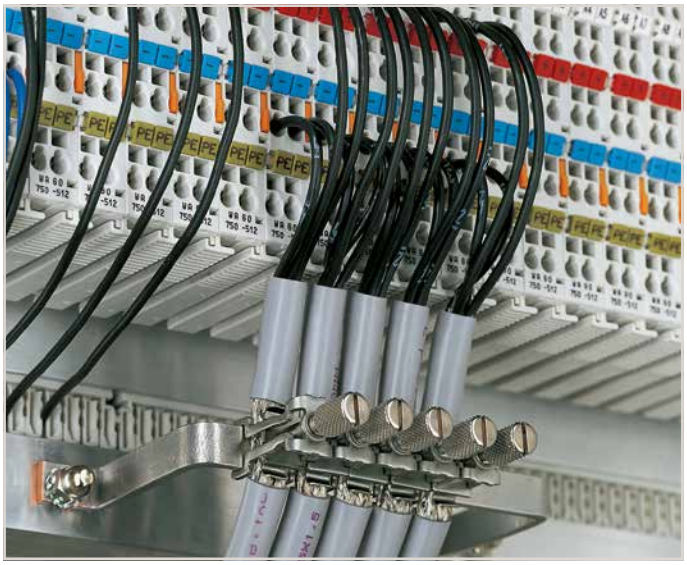

U-shaped (10 x 3) mm copper busbar

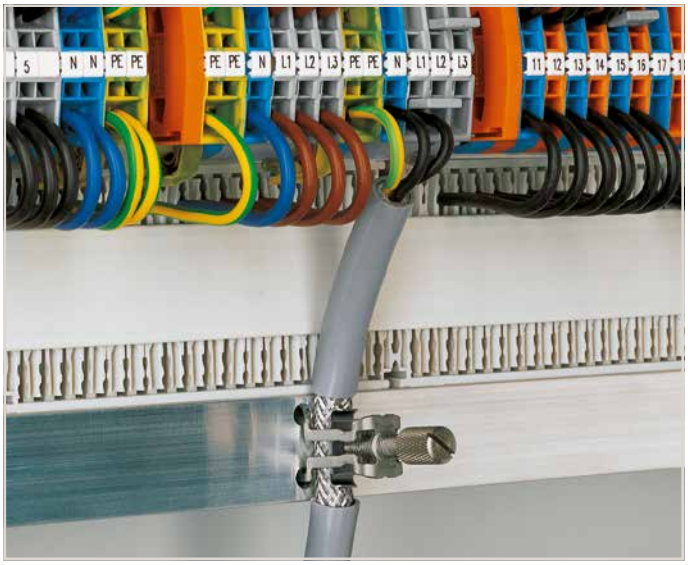

Snap shield clamping saddles into any metal plate (max. thickness: 3 mm).

Negative Shield Attenuation

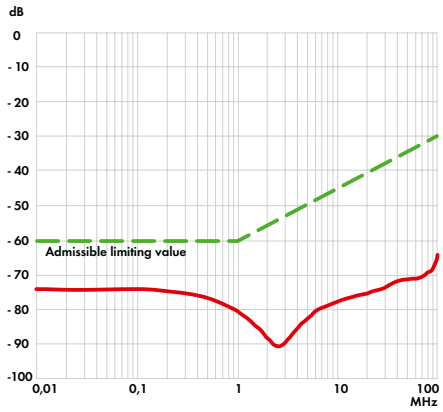

WAGO's shield connection system is highly effective because the clamping unit can be brought very close to the unshielded part of the cable.

Hole dimensions for panel mounting

Shield (screen) clamping saddle size	
Distance	X
11 mm	9.5 mm
Distance	Y
19 mm	17.5 mm
27 mm	25.5 mm
43 mm	41.5 mm

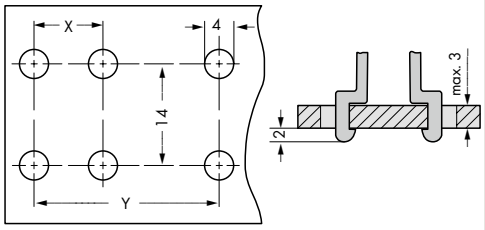

Additionally, the spring material is part of the clamping saddle, providing a good electrical connection (the system also acts as a partial strain relief). The spring element integrated in the shield clamping saddle compensates for deformation and settling that results from a connected shield.

Shield Clamping Saddles

790 Series

Shield clamping saddle shield diameter up to 8 mm	Shield clamping saddle shield diameter 7 … 16 mm	Shield clamping saddle shield diameter 6 … 24 mm
		
Item No. **Pack. Unit**	**Item No.** **Pack. Unit**	**Item No.** **Pack. Unit**
Shield clamping saddle, 11 mm wide Note: Cannot be used for connecting ground conductors.	Shield clamping saddle, 19 mm wide Note: Cannot be used for connecting ground conductors.	Shield clamping saddle, 27 mm wide Note: Cannot be used for connecting ground conductors.
790-108 50 (5x10)	**790-116** 50 (5x10)	**790-124** 50 (5x10)

Accessories for Shield Clamping Saddles

Carrier with grounding foot, busbar parallel to the rail, 15 mm long, for (10 x 3) mm copper busbars, for shield clamping saddles (790-108) **790-110** 25	Carrier with grounding foot, busbar 90° to the rail, 45 mm long, for (10 x 3) mm copper busbars, for shield clamping saddles (790 Series) **790-113** 25	Carrier with two grounding feet, busbar parallel to the rail, 125 mm long, for (10 x 3) mm copper busbars **790-115** 25
Carrier with grounding foot, busbar parallel to the rail, 25 mm long, for (10 x 3) mm copper busbars, for shield clamping saddles (790-108, 790-116) and shield clamps (791-111, 791-117) **790-112** 25	Carrier with grounding foot, busbar parallel to the rail, 45 mm long, for (10 x 3) mm copper busbars, for shield clamping saddles (790 Series) and shield clamps (791 Series) **790-114** 25	Straight busbar, tin-plated, 1000 mm long, copper (10 x 3) mm **210-133** 1 Straight busbar, tin-plated, 30 mm long, copper (10 x 3) mm **790-133** 20
Carrier rail, specialty slotted, 1000 mm long, tin-plated **790-145** 1	Spacer sleeve, for carrier rail, for M5-size screw, specialty slotted **790-144** 200 (2x100)	Straight busbar, tin-plated, 50 mm long, copper (10 x 3) mm **790-134** 20

Installation position (delivery state)

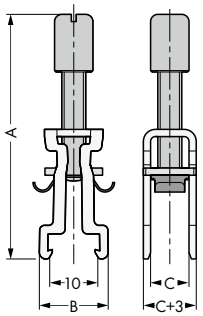

Closed position

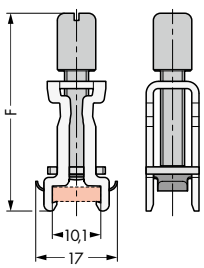

Removal position

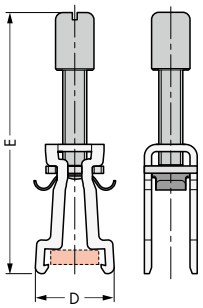

Dimensions in mm

Item No.	A	B	C	D	E	F
790-108	51	15	8	16	55	42
790-116	53	15	16	16	57	45
790-124	78	15	24	16	83	58
790-140	97	15	40	16	100	73

13

Shield clamping saddle
shield diameter
22 ... 40 mm





Item No.	Pack. Unit
Shield clamping saddle, 43 mm wide Note: Cannot be used for connecting ground conductors.	
790-140	50 (5x10)

Accessories for Shield Clamping Saddles

Insulated mounting foot, for busbar with M4 x 8 mm screw			
	gray	**790-100**	50 (2x25)
Insulated mounting foot, for busbar with (3.5 x 9) mm sheet metal screw			
	gray	**790-101**	50 (2x25)
U-shaped busbar, copper (10 x 3) mm, for 750 Series I/O modules			
	for 5 I/O	**790-190**	25 (5x5)
U-shaped busbar, copper (10 x 3) mm, for 750 Series I/O modules			
	for 8 I/O	**790-191**	25
U-shaped busbar, copper (10 x 3) mm, for 750 Series I/O modules			
	for 5 I/O	**790-192**	25
U-shaped busbar, copper (10 x 3) mm, for 750 Series I/O modules			
	for 8 I/O	**790-193**	25



Assembly:

The shield clamping saddle is shipped ready for direct connection to the (10 x 3) mm busbar or to a drilled mounting plate. After connection, tighten the knurled screw to complete the installation.
Maximum tightening torque: 0.5 Nm



Removal:

To remove the clamping saddle, unscrew until ratcheted mechanism is released, then slightly tip saddle and remove the clamping saddle.

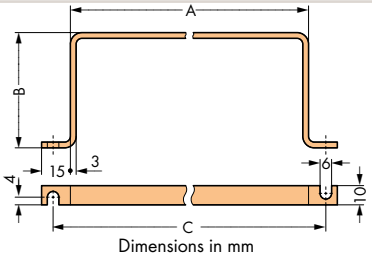

Dimensions in mm

Item No.	A	B	C	Item No.	A	B	C
for I/O module series 750 (5 E/A)							
790-190	63	60	83	**790-192**	63	35	83
for I/O module series 750 (8 E/A)							
790-191	100	60	118	**790-193**	100	35	118

Dimensions in mm

13

Spring-Equipped Shield Clamping Saddles, 790 Series
Installation



Shield clamping saddles are available in three different sizes for shield diameters ranging from 3 to 20 mm.

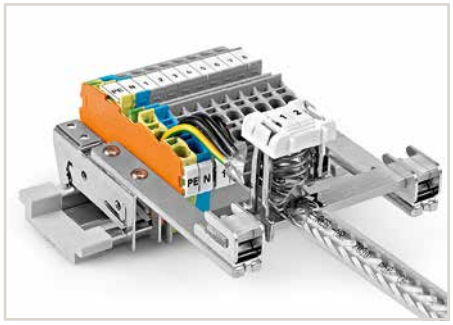

Application example



Compress the clamping saddle until fully engaged.



Mounting a clamping saddle on a specialty slotted carrier rail (790-145).
When releasing the saddle, do not place your finger under the clamping spring!



Removing the shield clamping saddle.



Shield clamping saddle contacts shield conductor and specialty slotted carrier rail (790-145).



Labelling using a marking strip.



Labelling using WMB markers.

Spring-Equipped Shield Clamping Saddles

790 Series

Shield clamping saddle shield diameter 3 … 8 mm	Shield clamping saddle shield diameter 6 … 16 mm	Shield clamping saddle shield diameter 6 … 20 mm
		
Item No. **Pack. Unit**	**Item No.** **Pack. Unit**	**Item No.** **Pack. Unit**
Shield clamping saddle, 12.4 mm wide Note: Cannot be used for connecting ground conductors and strain relief!	Shield clamping saddle, 21.8 mm wide Note: Cannot be used for connecting ground conductors and strain relief!	Shield clamping saddle, 27 mm wide Note: Cannot be used for connecting ground conductors and strain relief!
790-208 50	**790-216** 25	**790-220** 25

Accessories for Shield Clamping Saddles

Carrier with grounding foot, busbar parallel to the rail, 15 mm long, for (10 x 3) mm copper busbars, for shield clamping saddles (790-108) **790-110** 25	Carrier with grounding foot, busbar 90° to the rail, 45 mm long, for (10 x 3) mm copper busbars, for shield clamping saddles (790 Series) **790-113** 25	Carrier with two grounding feet, busbar parallel to the rail, 125 mm long, for (10 x 3) mm copper busbars **790-115** 25
Carrier with grounding foot, busbar parallel to the rail, 25 mm long, for (10 x 3) mm copper busbars, for shield clamping saddles (790-108, 790-116) and shield clamps (791-111, 791-117) **790-112** 25	Carrier with grounding foot, busbar parallel to the rail, 45 mm long, for (10 x 3) mm copper busbars, for shield clamping saddles (790 Series) and shield clamps (791 Series) **790-114** 25	Straight busbar, tin-plated, 1000 mm long, copper (10 x 3) mm **210-133** 1 Straight busbar, tin-plated, 30 mm long, copper (10 x 3) mm **790-133** 20
Carrier rail, specialty slotted, 1000 mm long, tin-plated **790-145** 1	Spacer sleeve, for carrier rail, for M5-size screw, specialty slotted **790-144** 200 (2x100)	Straight busbar, tin-plated, 50 mm long, copper (10 x 3) mm **790-134** 20

Delivery position

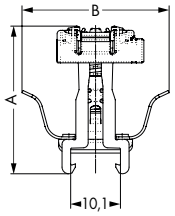

Mounting position

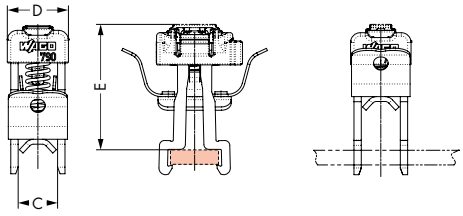

Dimensions in mm

Item No.	A	B	C	D	E*
790-208	30	29.9	8	12.4	25.8
790-216	34.6	28.3	16	21.8	30.2
790-220	45.6	28.3	24	30	41.2

*Height with WMB marker

13

Shield Clamps and Shield Termination

791 and 709 Series

Shield clamp	Shield termination





Item No.	Pack. Unit
Shield clamp, 1.5 ... 6.5 mm shield diameter, height max. 40 mm, 10 mm wide Note: Cannot be used for connecting ground conductors.	
791-107	
Shield clamp, 5 ... 11 mm shield diameter, height max. 47 mm, 17 mm wide Note: Cannot be used for connecting ground conductors.	
791-111	50
Shield clamp, 10 ... 17 mm shield diameter, height max. 63 mm, 23 mm wide Note: Cannot be used for connecting ground conductors.	
791-117	50
Shield clamp, 16 ... 24 mm shield diameter, height max. 78 mm, 30 mm wide Note: Cannot be used for connecting ground conductors.	
791-124	50

Item No.		Pack. Unit
Shield termination, includes cable ties for shield 5 mm and 10 mm shield diameter		
55 mm long	**709-350**	100 (4x25)
Shield termination, includes cable ties for shield 5 mm and 10 mm shield diameter		
150 mm long	**709-352**	100 (4x25)

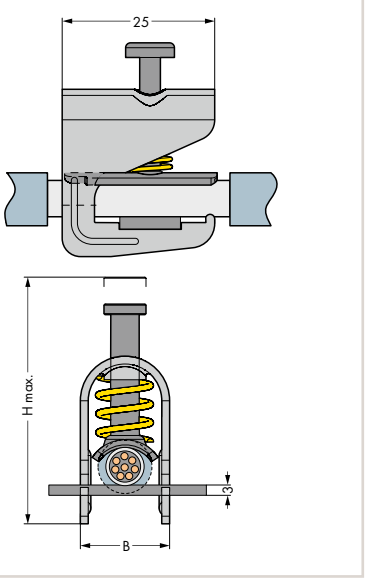

Dimensions in mm



Insert the shield termination into the female plug using the operating tool.



Fit the shield termination to the shield cable.

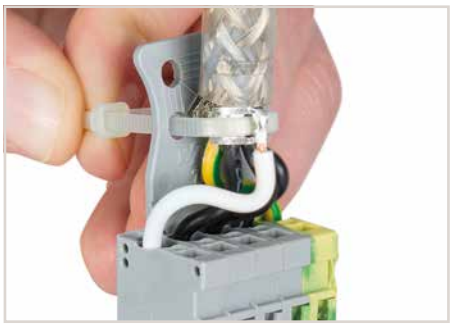

Secure both shield cable and shield termination to the strain relief plate using cable ties.



Shield termination connected to an X-COM® female plug

Busbar Carriers

790 Series

Busbar carrier

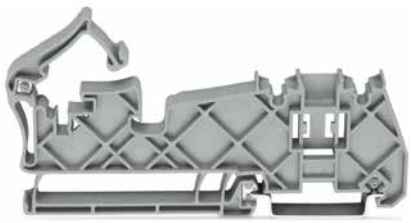

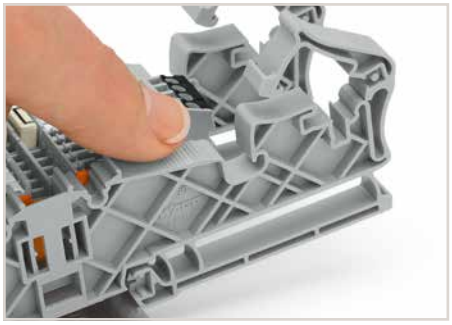

Snap the busbar carrier onto DIN-35 rail.



Vertical mounting position of the busbar

Item No.	Pack. Unit
Busbar carrier, for (10 x 3) mm copper busbars, no contact to DIN-rail, insulated	
790-400	20



Place the busbar in the carrier holder.



Horizontal mounting position of the busbar

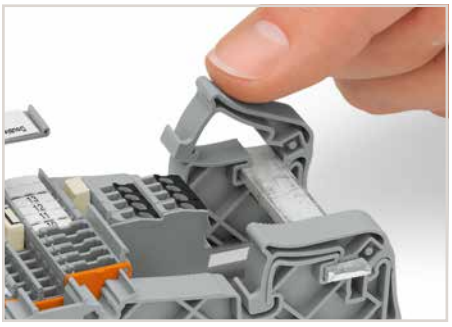

Snap the mounting bracket into position.

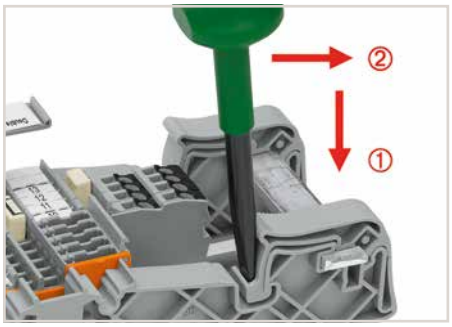

Release the mounting bracket by pushing the operating tool down ① and then forward ②.

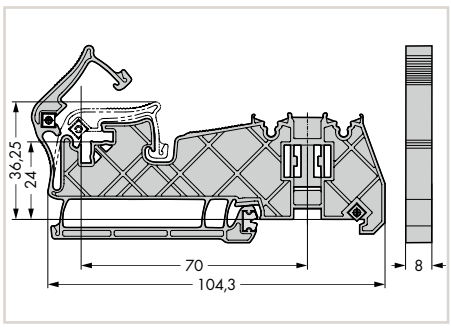

Dimensions in mm

13

Busbar Carriers

790 Series

Busbar carrier	Busbar carrier







Place the busbar in the busbar carrier.

Item No.	Pack. Unit
Busbar carrier, for (10 x 3) mm copper busbars, single side, straight, 70 mm between center of DIN-rail and busbar carrier	
790-300	10
Busbar carrier, for (10 x 3) mm copper busbars, single side, straight, 80 mm between center of DIN-rail and busbar carrier	
790-302	10

Item No.	Pack. Unit
Busbar carrier, for (10 x 3) mm copper busbars, single side, angled, 70 mm between center of DIN-rail and busbar carrier	
790-301	10

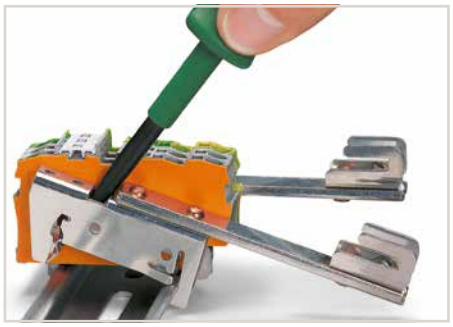

Remove the busbar carrier using an operating tool (type 3, 5.5 x 0.8 mm blade).

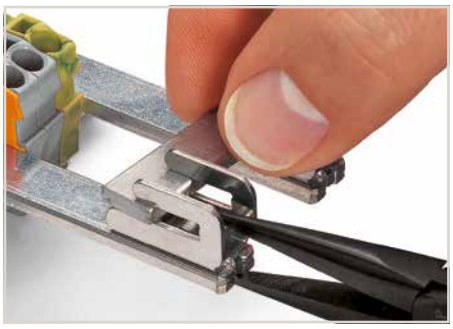

To remove the busbar, compress the spring using pliers.

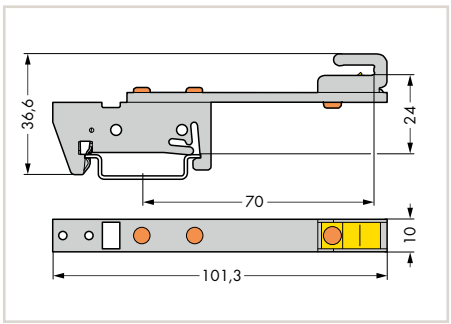

Dimensions in mm

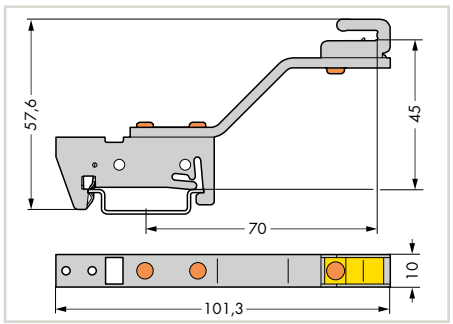

Dimensions in mm

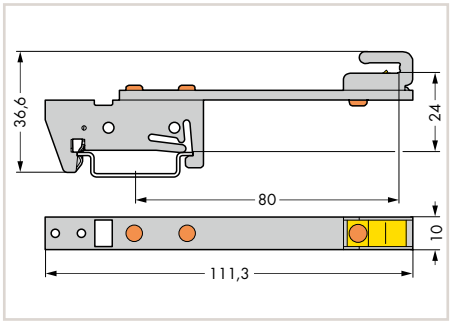

Dimensions in mm

13

Busbar Carriers

790 Series

Busbar carrier	Busbar carrier





Item No.	Pack. Unit	Item No.	Pack. Unit
Busbar carrier, for (10 x 3) mm copper busbars, both sides, straight, 70 mm between center of DIN-rail and busbar carrier		Busbar carrier, for (10 x 3) mm copper busbars, both sides, angled, 70 mm between center of DIN-rail and busbar carrier	
790-310	10	**790-311**	10
Busbar carrier, for (10 x 3) mm copper busbars, both sides, straight, 80 mm between center of DIN-rail and busbar carrier			
790-312	10		

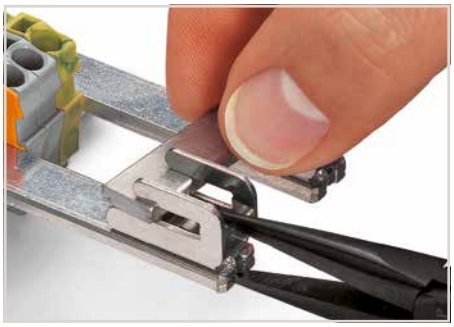

To remove the busbar, compress the spring using pliers.

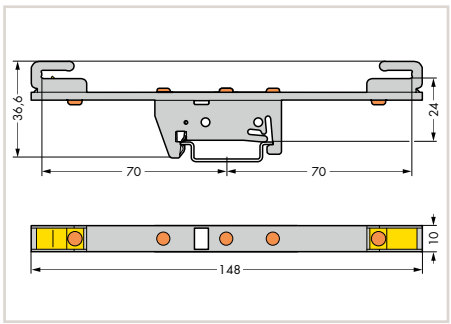

Dimensions in mm

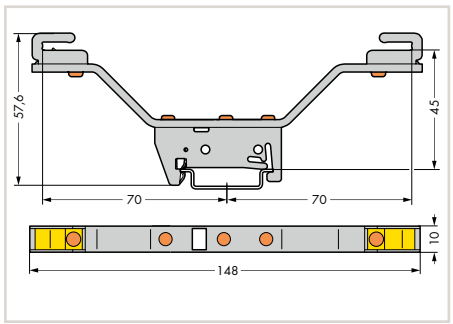

Dimensions in mm

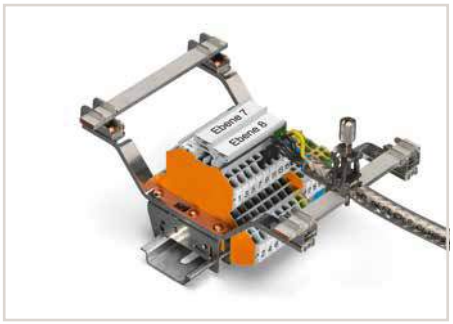

Application example

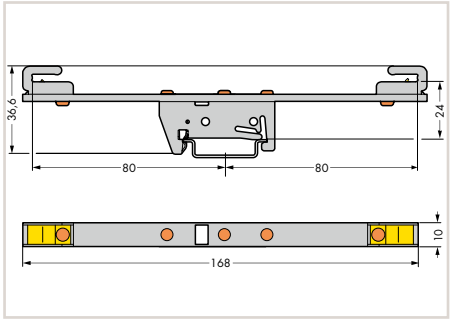

Dimensions in mm

13

Busbar Carriers with a T-Connector (Flexible) and T-Connector

790 Series

Busbar carriers with T-connector, flexible	T-connector

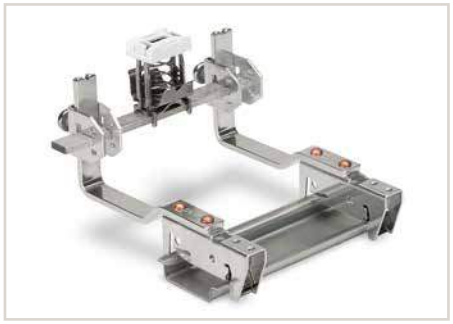

Horizontal mounting position of the busbar





Item No.	Pack. Unit	Item No.	Pack. Unit
Busbar carrier with a T-connector, flexible, for (10 x 3) mm copper busbars, 70 mm between center of DIN-rail and busbar carrier, 56 mm high		T-connector, connects two (10 x 3) mm copper busbars	
790-350/790-398	12	**790-398**	10
Busbar carrier with a T-connector, flexible, for (10 x 3) mm copper busbars, 70 mm between center of DIN-rail and busbar carrier, 99 mm high			
790-352/790-398	12		
Busbar carrier with a T-connector, flexible, for (10 x 3) mm copper busbars, 85 mm between center of DIN-rail and busbar carrier, 56 mm high			
790-360/790-398	12		
Busbar carrier with a T-connector, flexible, for (10 x 3) mm copper busbars, 85 mm between center of DIN-rail and busbar carrier, 99 mm high			
790-362/790-398	12		

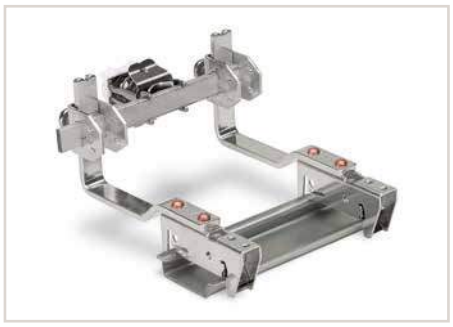

Vertical mounting position of the busbar

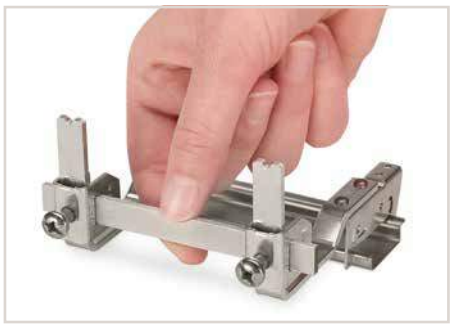

The height of the busbar can be adjusted.

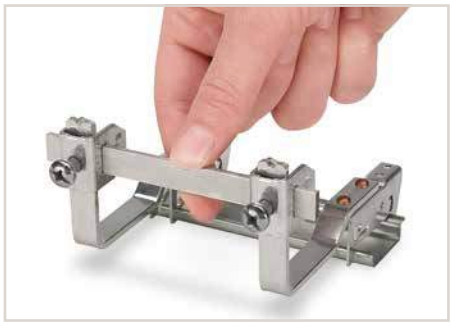

Secure the busbar by tightening the screws at the required position.

	A	B	X	Y
790-350/790-398	100	56	70	15 ... 52
790-352/790-398	100	99	70	15 ... 92
790-360/790-398	115	56	85	15 ... 52
790-362/790-398	115	99	85	15 ... 92

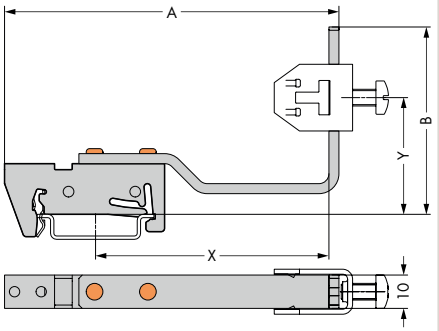

Dimensions in mm

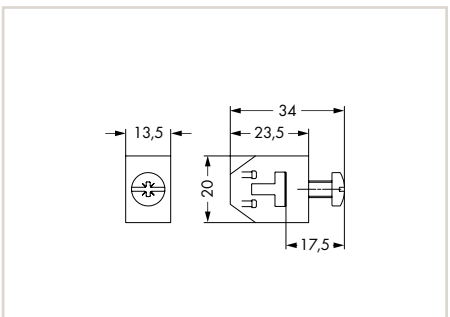

Dimensions in mm

13

WAGO *smart*DATA

Supports Workflow from Control Cabinet Planning to Installation

Electrical Engineering
Directly import data from a CAE circuit diagram into the ***smart***DESIGNER engineering software or output marking data on ***smart***PRINTER.

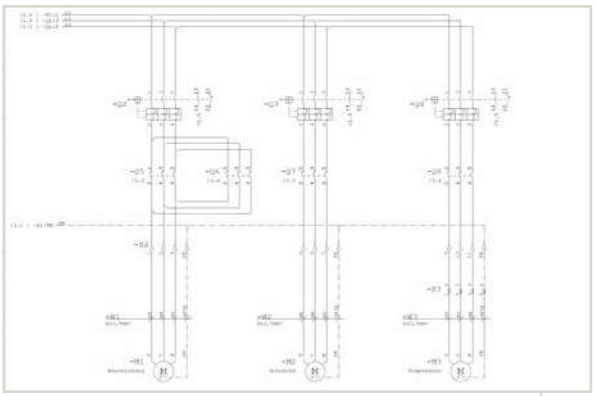

Technical and Commercial Item Data
Classified by ETIM and eCl@ss – also in Advanced Format

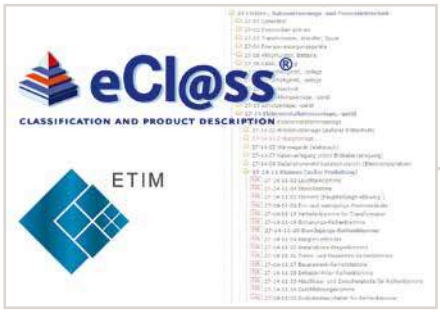

Mechanical Engineering
CAD export into all standard CAD formats and in different granularities

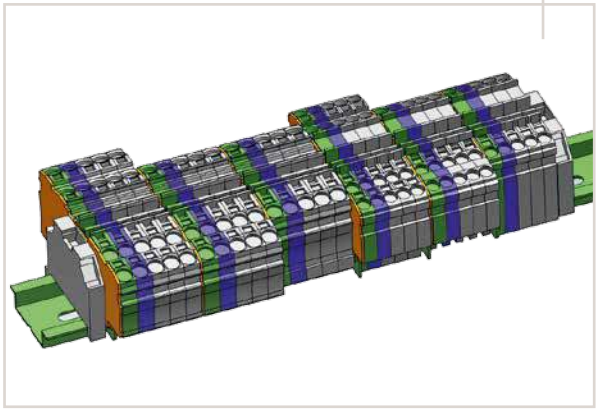

13

***smart*DESIGNER**

- Free online configuration and ordering software for all electrical interconnect and automation components
- No installation required
- Available worldwide – 24 hours a day
- Item data is always updated
- Auto-audit feature checks product compatibility via programed database
- Design in full 3-D

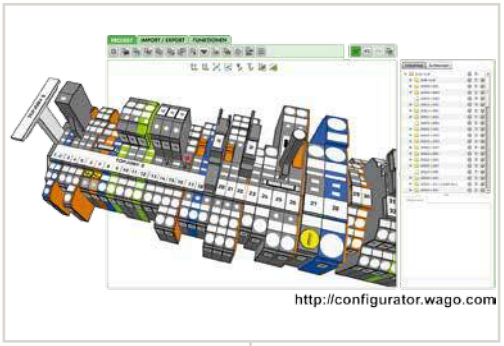



***smart*SCRIPT**

- XML-based software for all WAGO markers
- Data import from CAE systems
- Font size check
- Material selection wizard



Configuration made easy – http://configurator.wago.com

WAGO *smart*DATA
Fast and Easy Control Cabinet Marking

***smart*DESIGNER**
After designing, print the markers directly from the project via ***smart*PRINTER**

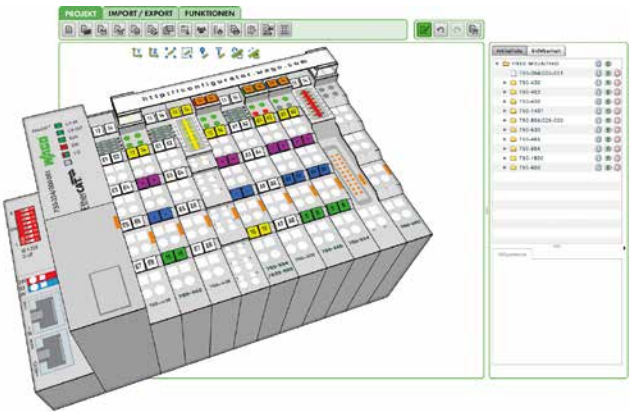

http://configurator.wago.com

***smart*SCRIPT**
- Import from CAE systems or create customized marking
- Print directly on ***smart*PRINTER**

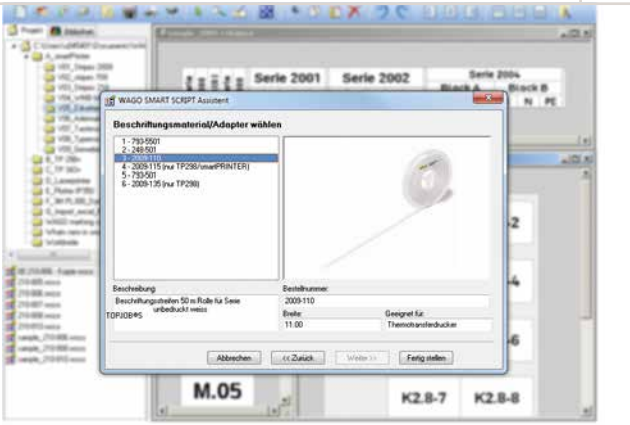

www..wago.com/smartprinter

13



***smart*PRINTER**
Thermal transfer printer quickly and easily labels the entire control cabinet:
- WAGO marking strips and markers
- Cable and conductor markers
- Type labels
- Push-button markers
- Labels
- For more information visit: **www.wago.com/smartprinter**

Marking Systems
Description and Installation

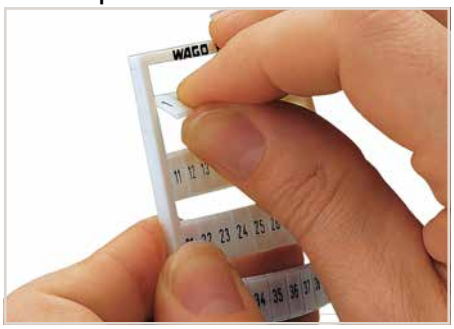

Separating a strip from the WMB or WMB marker card.


Stretching a WMB marker strip.


Separating an individual marker from the strip – for larger terminal blocks.



Marking via Mini-WSB Quick markers.

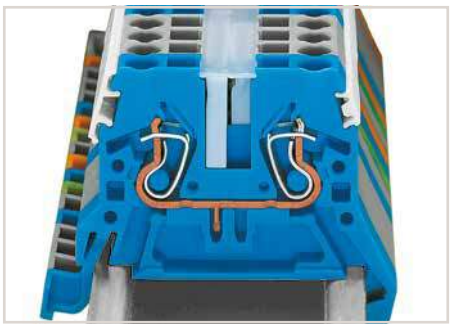
WMB markers in Mini-WSB marker slots
Marking strip, translucent
Mini-WSB markers

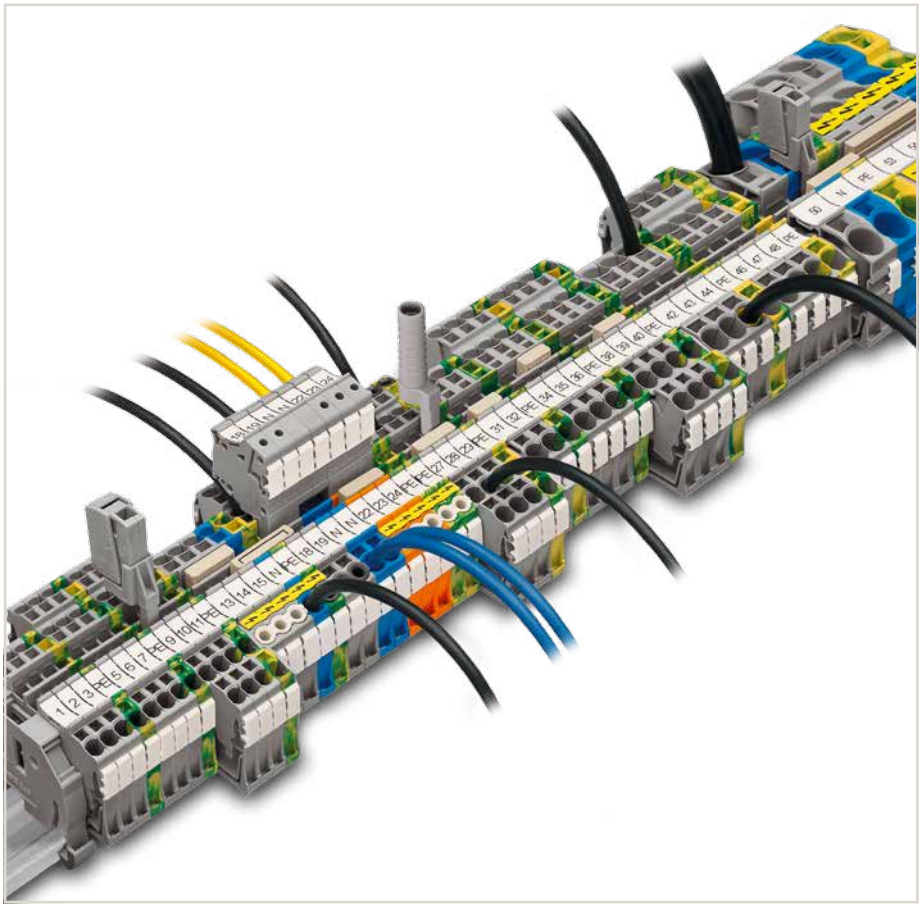

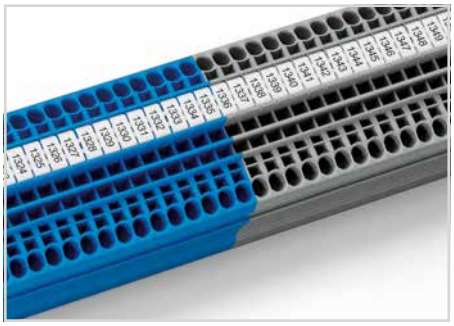
WMB Inline

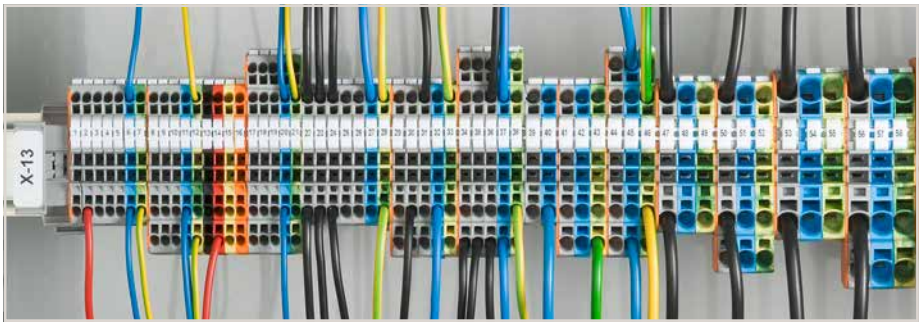

WMB Inline

13

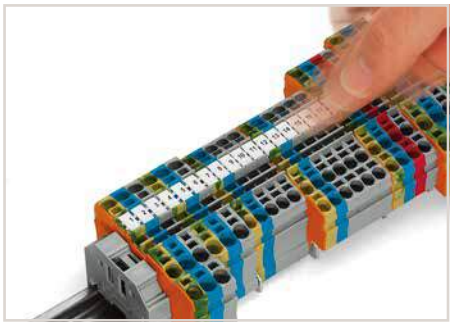

WMB Inline:
Snapping a strip into the marker slots.

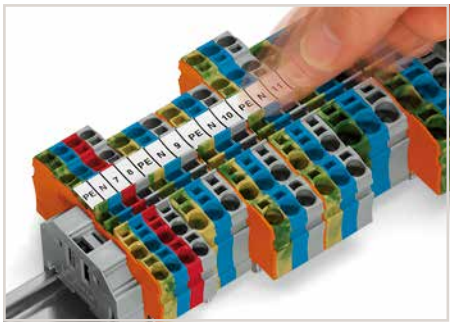

Marking strips:
Snapping a strip into the marker slots.

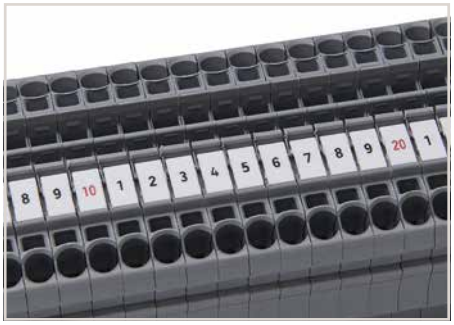

WMB decade marking



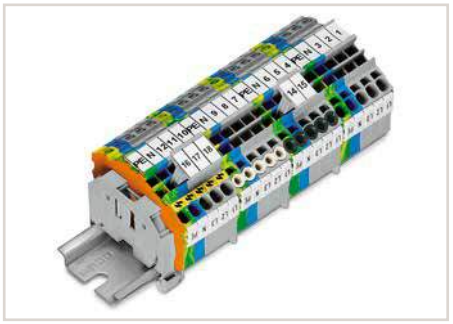

Group marker carriers for TOPJOB® S terminal blocks – snap-on type for jumper slot



Double- and triple-deck marker carriers can be snapped retrospectively into the jumper contact slot of double- and triple-deck terminal blocks.



Height-adjustable group marker carrier (249-116) for TOPJOB® S marking strips (2009-110)



Height-adjustable group marker carrier

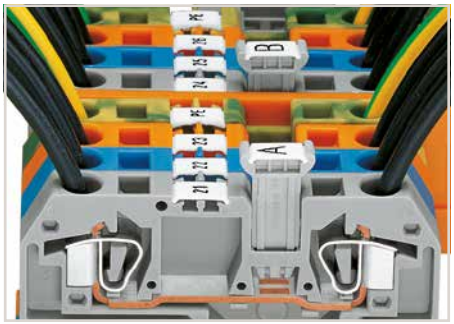

Additional group marking

WMB Multi Marking Systems

for Terminal Widths 3.5 mm, 4 … 4.2 mm and from 5 mm

	horizontal marking **consecutive numbers per strip** **10 strips with 10 markers per card** **for terminal widths 5 … 17.5 mm and** **5 … 5.2 mm and 4 … 4.2 mm and 3.5 mm**

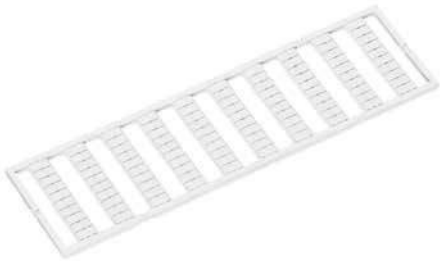

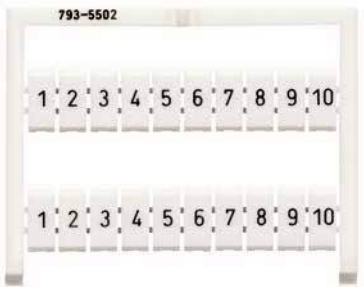

❶ For continuous marking of 270, 280, 780, 869, 870 and 880 Series terminal blocks
Individual marking of 281 … 285, 781 … 785, 2002, 2003, 2022, 2004, 2006, 2010 and 2016 Series terminal blocks
❷ For continuous marking of 270, 280, 780, 869, 870, 880, 2002, 2003 and 2022 Series terminal blocks
Individual marking of terminal blocks larger than 5 / 5.2 mm
❸ For continuous marking of 279 and 2001 Series terminal blocks
❹ For continuous marking of 2000 and 2020 Series terminal blocks

Marking	Marker Width 5 mm ❶	Marker Width 5 … 5.2 mm ❷	Marker Width 4 … 4.2 mm ❸	Marker Width 3.5 mm ❹
1 … 10 (10x)	**793-502**	**793-5502**	**793-4502**	**793-3502**
11 … 20 (10x)	**793-503**	**793-5503**	**793-4503**	**793-3503**
21 … 30 (10x)	**793-504**	**793-5504**	**793-4504**	**793-3504**
31 … 40 (10x)	**793-505**	**793-5505**	**793-4505**	**793-3505**
41 … 50 (10x)	**793-506**	**793-5506**	**793-4506**	**793-3506**
51 … 60 (10x)	**793-569**	**793-5569**	**793-4569**	
61 … 70 (10x)	**793-570**	**793-5570**	**793-4570**	
71 … 80 (10x)	**793-571**	**793-5571**	**793-4571**	
81 … 90 (10x)	**793-572**	**793-5572**	**793-4572**	
91 … 100 (10x)	**793-573**	**793-5573**	**793-4573**	
1 … 50 (2x)	**793-566**	**793-5566**	**793-4566**	**793-3566**
51 … 100 (2x)	**793-507**	**793-5507**	**793-4507**	**793-3507**
101 … 150 (2x)	**793-508**	**793-5508**	**793-4508**	**793-3508**
151 … 200 (2x)	**793-509**	**793-5509**	**793-4509**	**793-3509**
201 … 300 (1x)	**793-510**	**793-5510**	**793-4510**	**793-3510**
301 … 400 (1x)	**793-511**	**793-5511**	**793-4511**	
401 … 500 (1x)	**793-512**	**793-5512**	**793-4512**	
501 … 600 (1x)	**793-513**	**793-5513**	**793-4513**	
601 … 700 (1x)	**793-514**	**793-5514**	**793-4514**	
701 … 800 (1x)	**793-515**	**793-5515**	**793-4515**	
801 … 900 (1x)	**793-516**	**793-5516**	**793-4516**	
901 … 1000 (1x)	**793-517**	**793-5517**	**793-4517**	
1 … 9 (10x)	**793-565**	**793-5565**	**793-4565**	**793-3565**
for double-deck terminal blocks,				
1, 3, 5, ..., 99 and 2, 4, 6, ..., 100 (1x)	**793-599**	**793-5599**	**793-4599**	**793-3599**
for triple-deck terminal blocks,				
1, 4, 7, … , 88 and 2, 5, 8, … , 89 and 3, 6, 9, … , 90				
and 91, 94, 97, 92, 95, 98, 93, 96, 99, ; (1x)	**794-557**	**794-5557**		
100, 103, 106, … , 187 and 101, 104, 107, … , 188				
and 102, 105, 108, … , 189 and 190, 193, 196, 191,				
194, 197, 192, 195, 198, ; (1x)	**794-558**	**794-5558**		

WMB Multi Marking Systems

for Terminal Widths 3.5 mm, 4 ... 4.2 mm and from 5 mm

	vertical marking **consecutive numbers per strip** **10 strips with 10 markers per card** **for terminal widths 5 ... 17.5 mm and** **5 ... 5.2 mm and 4 ... 4.2 mm and 3.5 mm**

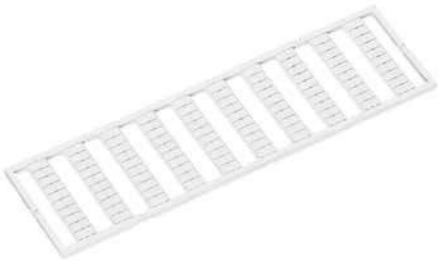

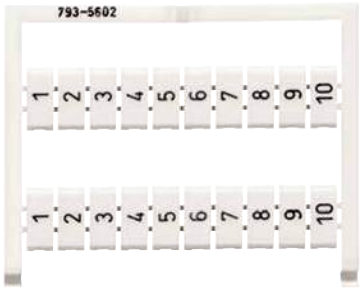

❶ For continuous marking of 270, 280, 780, 869, 870 and 880 Series terminal blocks
Individual marking of 281 ... 285, 781 ... 785, 2002, 2003, 2022, 2004, 2006, 2010 and 2016 Series terminal blocks
❷ For continuous marking of 270, 280, 780, 869, 870, 880, 2002, 2003 and 2022 Series terminal blocks
Individual marking of terminal blocks larger than 5 / 5.2 mm
❸ For continuous marking of 279 and 2001 Series terminal blocks
❹ For continuous marking of 2000 and 2020 Series terminal blocks

Marking	Marker Width 5 mm ❶	Marker Width 5 ... 5.2 mm ❷	Marker Width 4 ... 4.2 mm ❸	Marker Width 3.5 mm ❹
1 ... 10 (10x)	**793-602**	**793-5602**	**793-4602**	upon request
11 ... 20 (10x)	**793-603**	**793-5603**	**793-4603**	
21 ... 30 (10x)	**793-604**	**793-5604**	**793-4604**	
31 ... 40 (10x)	**793-605**	**793-5605**	**793-4605**	
41 ... 50 (10x)	**793-606**	**793-5606**	**793-4606**	
51 ... 60 (10x)	**794-601**	**794-5601**	**794-4601**	
61 ... 70 (10x)	**794-602**	**794-5602**	**794-4602**	
71 ... 80 (10x)	**794-603**	**794-5603**	**794-4603**	
81 ... 90 (10x)	**794-604**	**794-5604**	**794-4604**	
91 ... 100 (10x)	**794-605**	**794-5605**	**794-4605**	
1 ... 50 (2x)	**793-666**	**793-5666**	**793-4666**	
51 ... 100 (2x)	**793-607**	**793-5607**	**793-4607**	
101 ... 150 (2x)	**793-608**	**793-5608**	**793-4608**	
151 ... 200 (2x)	**793-609**	**793-5609**	**793-4609**	
201 ... 300 (1x)	**793-610**	**793-5610**	**793-4610**	
301 ... 400 (1x)	**793-611**	**793-5611**	**793-4611**	
401 ... 500 (1x)	**793-612**	**793-5612**	**793-4612**	
501 ... 600 (1x)	**793-613**	**793-5613**	**793-4613**	
601 ... 700 (1x)	**793-614**	**793-5614**	**793-4614**	
701 ... 800 (1x)	**793-615**	**793-5615**	**793-4615**	
801 ... 900 (1x)	**793-616**	**793-5616**	**793-4616**	
901 ... 1000 (1x)	**793-617**	**793-5617**	**793-4617**	
1001 ... 1100 (1x)	**793-688**	**793-5688**	**793-4688**	
1101 ... 1200 (1x)	**793-669**	**793-5669**	**793-4669**	
1201 ... 1300 (1x)	**793-670**	**793-5670**	**793-4670**	
1301 ... 1400 (1x)	**793-671**	**793-5671**	**793-4671**	
1401 ... 1500 (1x)	**793-672**	**793-5672**	**793-4672**	
1501 ... 1600 (1x)	**793-901**	**793-5901**	**793-4901**	
1601 ... 1700 (1x)	**793-902**	**793-5902**	**793-4902**	
1701 ... 1800 (1x)	**793-903**	**793-5903**	**793-4903**	
1801 ... 1900 (1x)	**793-912**	**793-5912**	**793-4912**	
1901 ... 2000 (1x)	**793-913**	**793-5913**	**793-4913**	
101, 101, 101, 102, ..., 130, 130, 130 (1x)	**793-667**	**793-5667**	**793-4667**	
131, 131, 131, 132, ..., 160, 160, 160 (1x)	**793-668**	**793-5668**	**793-4668**	
for double-deck terminal blocks,				
1, 3, 5, ..., 99 and 2, 4, 6, ..., 100 (1x)	**793-699**	**793-5699**	**793-4699**	
101, 103, 105, ..., 149 and 102, 104, 106, ..., 150 (2x)	**793-900**	**793-5900**	**793-4900**	
for triple-deck terminal blocks,				
1, 4, 7, ... , 88 and 2, 5, 8, ... , 89 and 3, 6, 9, ... , 90				
and 91, 94, 97, 92, 95, 98, 93, 96, 99, ; (1x)	**794-657**	**794-5657**		
100, 103, 106, ... , 187 and 101, 104, 107, ... , 188				
and 102, 105, 108, ... , 189 and 190, 193, 196, 191,				
194, 197, 192, 195, 198, ; (1x)	**794-658**	**794-5658**		

WMB Multi Marking Systems

for Terminal Widths 3.5 mm, 4 ... 4.2 mm and from 5 mm

	horizontal marking **consecutive numbers per strip** **10 strips with 10 markers per card** **for terminal widths 5 ... 17.5 mm and** **5 ... 5.2 mm and 4 ... 4.2 mm and 3.5 mm**

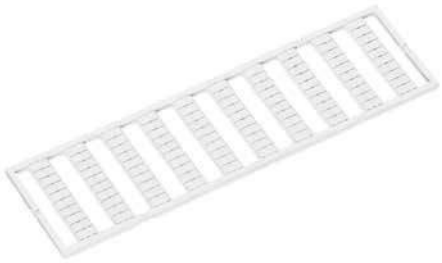

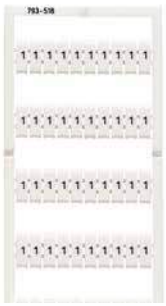

❶ For continuous marking of 270, 280, 780, 869, 870 and 880 Series terminal blocks
Individual marking of 281 ... 285, 781 ... 785, 2002, 2003, 2022, 2004, 2006, 2010 and 2016 Series terminal blocks
❷ For continuous marking of 270, 280, 780, 869, 870, 880, 2002, 2003 and 2022 Series terminal blocks
Individual marking of terminal blocks larger than 5 / 5.2 mm
❸ For continuous marking of 279 and 2001 Series terminal blocks
❹ For continuous marking of 2000 and 2020 Series terminal blocks

Marking	Marker Width 5 mm ❶	Marker Width 5 ... 5.2 mm ❷	Marker Width 4 ... 4.2 mm ❸	Marker Width 3.5 mm ❹
1/2 (50x)	**793-518**	**793-5518**	**793-4518**	upon request
3/4 (50x)	**793-519**	**793-5519**	**793-4519**	
5/6 (50x)	**793-520**	**793-5520**	**793-4520**	
7/8 (50x)	**793-521**	**793-5521**	**793-4521**	
9/10 (50x)	**793-522**	**793-5522**	**793-4522**	
11/12 (50x)	**793-523**	**793-5523**	**793-4523**	
13/14 (50x)	**793-524**	**793-5524**	**793-4524**	
15/16 (50x)	**793-525**	**793-5525**	**793-4525**	
17/18 (50x)	**793-526**	**793-5526**	**793-4526**	
19/20 (50x)	**793-527**	**793-5527**	**793-4527**	
21/22 (50x)	**793-528**	**793-5528**	**793-4528**	
23/24 (50x)	**793-529**	**793-5529**	**793-4529**	
25/26 (50x)	**793-530**	**793-5530**	**793-4530**	
27/28 (50x)	**793-531**	**793-5531**	**793-4531**	
29/30 (50x)	**793-532**	**793-5532**	**793-4532**	
31/32 (50x)	**793-533**	**793-5533**	**793-4533**	
33/34 (50x)	**793-534**	**793-5534**	**793-4534**	
35/36 (50x)	**793-535**	**793-5535**	**793-4535**	
37/38 (50x)	**793-536**	**793-5536**	**793-4536**	
39/40 (50x)	**793-537**	**793-5537**	**793-4537**	
41/42 (50x)	**793-538**	**793-5538**	**793-4538**	
43/44 (50x)	**793-539**	**793-5539**	**793-4539**	
45/46 (50x)	**793-540**	**793-5540**	**793-4540**	
47/48 (50x)	**793-541**	**793-5541**	**793-4541**	
49/50 (50x)	**793-542**	**793-5542**	**793-4542**	

WMB Multi Marking Systems

for Terminal Widths 3.5 mm, 4 … 4.2 mm and from 5 mm

	vertical marking **consecutive numbers per strip** **10 strips with 10 markers per card** **for terminal widths 5 … 17.5 mm and** **5 … 5.2 mm and 4 … 4.2 mm and 3.5 mm**

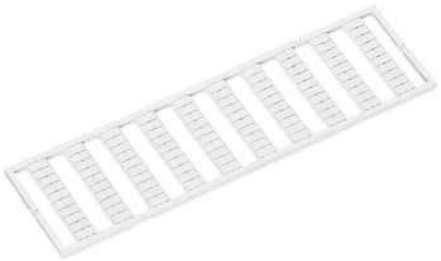

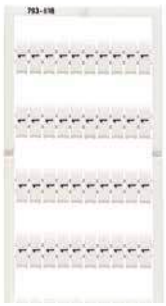

❶ For continuous marking of 270, 280, 780, 869, 870 and 880 Series terminal blocks
Individual marking of 281 … 285, 781 … 785, 2002, 2003, 2022, 2004, 2006, 2010 and 2016 Series terminal blocks
❷ For continuous marking of 270, 280, 780, 869, 870, 880, 2002, 2003 and 2022 Series terminal blocks
Individual marking of terminal blocks larger than 5 / 5.2 mm
❸ For continuous marking of 279 and 2001 Series terminal blocks
❹ For continuous marking of 2000 and 2020 Series terminal blocks

Marking	Marker Width 5 mm ❶	Marker Width 5 … 5.2 mm ❷	Marker Width 4 … 4.2 mm ❸	Marker Width 3.5 mm ❹
1/2 (50x)	**793-618**	**793-5618**	**793-4618**	upon request
3/4 (50x)	**793-619**	**793-5619**	**793-4619**	
5/6 (50x)	**793-620**	**793-5620**	**793-4620**	
7/8 (50x)	**793-621**	**793-5621**	**793-4621**	
9/10 (50x)	**793-622**	**793-5622**	**793-4622**	
11/12 (50x)	**793-623**	**793-5623**	**793-4623**	
13/14 (50x)	**793-624**	**793-5624**	**793-4624**	
15/16 (50x)	**793-625**	**793-5625**	**793-4625**	
17/18 (50x)	**793-626**	**793-5626**	**793-4626**	
19/20 (50x)	**793-627**	**793-5627**	**793-4627**	

WMB Multi Marking Systems

for Terminal Widths 3.5 mm, 4 ... 4.2 mm and from 5 mm

	horizontal marking **consecutive letters/symbols each strip** **10 strips with 10 markers per card** **for terminal widths 5 ... 17.5 mm and** **5 ... 5.2 mm and 4 ... 4.2 mm and 3.5 mm**

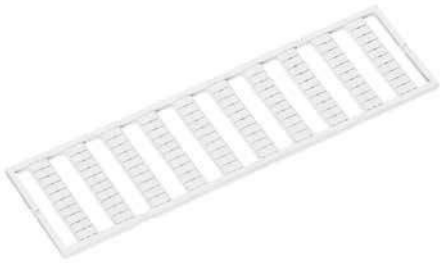

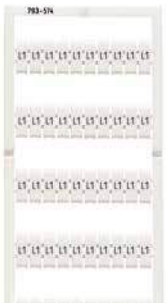

❶ For continuous marking of 270, 280, 780, 869, 870 and 880 Series terminal blocks
Individual marking of 281 ... 285, 781 ... 785, 2002, 2003, 2022, 2004, 2006, 2010 and 2016 Series terminal blocks
❷ For continuous marking of 270, 280, 780, 869, 870, 880, 2002, 2003 and 2022 Series terminal blocks
Individual marking of terminal blocks larger than 5 / 5.2 mm
❸ For continuous marking of 279 and 2001 Series terminal blocks
❹ For continuous marking of 2000 and 2020 Series terminal blocks

Marking	Marker Width 5 mm ❶	Marker Width 5 ... 5.2 mm ❷	Marker Width 4 ... 4.2 mm ❸	Marker Width 3.5 mm ❹
L1 (100x)	**793-574**	**793-5574**	**793-4574**	upon request
L2 (100x)	**793-575**	**793-5575**	**793-4575**	
L3 (100x)	**793-576**	**793-5576**	**793-4576**	
N (100x)	**793-577**	**793-5577**	**793-4577**	
PE (100x)	**793-578**	**793-5578**	**793-4578**	
PEN (100x)	**793-579**	**793-5579**	**793-4579**	
Ground (100x)	**793-580**	**793-5580**	**793-4580**	
R (100x)	**793-581**	**793-5581**	**793-4581**	
S (100x)	**793-582**	**793-5582**	**793-4582**	
T (100x)	**793-583**	**793-5583**	**793-4583**	
+/- (50x)	**793-552**	**793-5552**	**793-4552**	
a, b, c, e, u, v, w, x, y, z (10x)	**793-543**	**793-5543**	**793-4543**	
R, S, T, U, V, W, X, Y, Z, Mp (10x)	**793-544**	**793-5544**	**793-4544**	**793-3544**
A, B, P, N, PE, PEN, L1, L2, L3, Ground (10x)	**793-545**	**793-5545**	**793-4545**	**793-3545**
U, V, W, N, PE, U, V, W, N, PE (10x)	**793-474**	**793-5474**	**793-4474**	
L1, L2, L3, N, PE, L1, L2, L3, N, PE (10x)	**793-472**	**793-5472**	**793-4472**	
U1, V1, W1, U1, V1, W1, U1, V1, W1,... (10x)	**793-487**	**793-5487**	**793-4487**	
U2, V2, W2, U2, V2, W2, U2, V2, W2,... (10x)	**793-494**	**793-5494**	**793-4494**	
U3, V3, W3, U3, V3, W3, U3, V3, W3,... (10x)	**793-495**	**793-5495**	**793-4495**	
U4, V4, W4, U4, V4, W4, U4, V4, W4,... (10x)	**793-496**	**793-5496**	**793-4496**	
U5, V5, W5, U5, V5, W5, U5, V5, W5,... (10x)	**793-497**	**793-5497**	**793-4497**	
U6, V6, W6, ..., U6, V6, W6,... to U9, V9, W9, ..., U9, V9, W9, (2x)	**793-498**	**793-5498**	**793-4498**	
R1, S1, T1, U1, V1, W1, X1, Y1, Z1,SL (10x)	**793-546**	**793-5546**	**793-4546**	
R2, S2, T2, U2, V2, W2, X2, Y2, Z2,SL (10x)	**793-547**	**793-5547**	**793-4547**	
R3, S3, T3, U3, V3, W3, X3, Y3, Z3,SL (10x)	**793-548**	**793-5548**	**793-4548**	
R4, S4, T4, ..., Y4, Z4, SL and R5, S5, T5, ..., Y5, Z5, SL (5x)	**793-549**	**793-5549**	**793-4549**	
R6, S6, T6, ..., Y6, Z6, SL to R10, S10, T10, ..., Y10, Z10, SL (2x)	**793-550**	**793-5550**	**793-4550**	

WMB Multi Marking Systems

for Terminal Widths 3.5 mm, 4 ... 4.2 mm and from 5 mm

	vertical marking **consecutive letters/symbols each strip** **10 strips with 10 markers per card** **for terminal widths 5 ... 17.5 mm and** **5 ... 5.2 mm and 4 ... 4.2 mm and 3.5 mm**

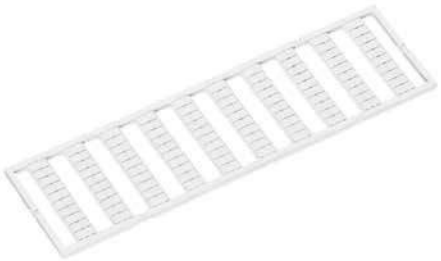



❶ For continuous marking of 270, 280, 780, 869, 870 and 880 Series terminal blocks
Individual marking of 281 ... 285, 781 ... 785, 2002, 2003, 2022, 2004, 2006, 2010 and 2016 Series terminal blocks
❷ For continuous marking of 270, 280, 780, 869, 870, 880, 2002, 2003 and 2022 Series terminal blocks
Individual marking of terminal blocks larger than 5 / 5.2 mm
❸ For continuous marking of 279 and 2001 Series terminal blocks
❹ For continuous marking of 2000 and 2020 Series terminal blocks

Marking	Marker Width 5 mm ❶	Marker Width 5 ... 5.2 mm ❷	Marker Width 4 ... 4.2 mm ❸	Marker Width 3.5 mm ❹
L1 (100x)	**793-674**	**793-5674**	**793-4674**	upon request
L2 (100x)	**793-675**	**793-5675**	**793-4675**	
L3 (100x)	**793-676**	**793-5676**	**793-4676**	
N (100x)	**793-677**	**793-5677**	**793-4677**	
PE (100x)	**793-678**	**793-5678**	**793-4678**	
PEN (100x)	**793-679**	**793-5679**	**793-4679**	
Erde (100x)	**793-580**	**793-5680**	**793-4680**	
R (100x)	**793-681**	**793-5681**	**793-4681**	
S (100x)	**793-682**	**793-5682**	**793-4682**	
T (100x)	**793-683**	**793-5683**	**793-4683**	
+/- (50x)	**793-652**	**793-5652**	**793-4652**	
a, b, c, e, u, v, w, x, y, z (10x)	**793-643**	**793-5643**	**793-4643**	
R, S, T, U, V, W, X, Y, Z, Mp (10x)	**793-644**	**793-5644**	**793-4644**	
A, B, P, N, PE, PEN, L1, L2, L3, Ground (10x)	**793-645**	**793-5645**	**793-4645**	
U, V, W, N, PE, U, V, W, N, PE (10x)	**794-674**	**794-5674**	**794-4674**	
L1, L2, L3, N, PE, L1, L2, L3, N, PE (10x)	**794-672**	**794-5672**	**794-4672**	
U1, V1, W1, U1, V1, W1, U1, V1, W1,... (10x)	**793-687**	**793-5687**	**793-4687**	
U2, V2, W2, U2, V2, W2, U2, V2, W2,... (10x)	**793-694**	**793-5694**	**793-4694**	
U3, V3, W3, U3, V3, W3, U3, V3, W3,... (10x)	**793-695**	**793-5695**	**793-4695**	
U4, V4, W4, U4, V4, W4, U4, V4, W4,... (10x)	**793-696**	**793-5696**	**793-4696**	
U5, V5, W5, U5, V5, W5, U5, V5, W5,... (10x)	**793-697**	**793-5697**	**793-4697**	
U6, V6, W6, ..., U6, V6, W6,... to U9, V9, W9, ..., U9, V9, W9, (2x)	**793-698**	**793-5698**		
R1, S1, T1, U1, V1, W1, X1, Y1, Z1,SL (10x)	**793-646**	**793-5646**	**793-4646**	
R2, S2, T2, U2, V2, W2, X2, Y2, Z2,SL (10x)	**793-647**	**793-5647**	**793-4647**	
R3, S3, T3, U3, V3, W3, X3, Y3, Z3,SL (10x)	**793-648**	**793-5648**	**793-4648**	
R4, S4, T4, ..., Y4, Z4, SL and R5, S5, T5, ..., Y5, Z5, SL (5x)	**793-649**		**793-4649**	
R6, S6, T6, ..., Y6, Z6, SL to R10, S10, T10, ..., Y10, Z10, SL (2x)	**793-650**			

13

WMB Multi Marking Systems

for Terminal Widths 3.5 mm, 4 … 4.2 mm and from 5 mm

	horizontal marking **10 strips with 10 markers per card for terminal widths 5 … 17.5 mm and 5 … 5.2 mm and 4 … 4.2 mm and 3.5 mm**

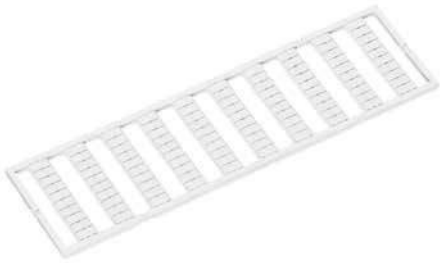



❶ For continuous marking of 270, 280, 780, 869, 870 and 880 Series terminal blocks
Individual marking of 281 … 285, 781 … 785, 2002, 2003, 2022, 2004, 2006, 2010 and 2016 Series terminal blocks
❷ For continuous marking of 270, 280, 780, 869, 870, 880, 2002, 2003 and 2022 Series terminal blocks
Individual marking of terminal blocks larger than 5 / 5.2 mm
❸ For continuous marking of 279 and 2001 Series terminal blocks
❹ For continuous marking of 2000 and 2020 Series terminal blocks

Marking	Marker Width 5 mm ❶	Marker Width 5 … 5.2 mm ❷	Marker Width 4 … 4.2 mm ❸	Marker Width 3.5 mm ❹
for subdistribution boxes (power stations),				
vertical marking				
1A, 1B, ..., 1G, 1H, ... to 10A, 10B, ..., 10G, 10H, , ; (1x)	**793-958**	**793-5958**	**793-4958**	
for fuse terminal blocks 281-6..,				
vertical marking				
F1, ..., F10 (10x)	**794-615**	**794-5615**	**794-4615**	
F11, ..., F20 (10x)	**794-616**	**794-5616**	**794-4616**	
F21, ..., F30 (10x)	**794-617**	**794-5617**	**794-4617**	
F31, ..., F40 (10x)	**794-618**	**794-5618**	**794-4618**	
F41, ..., F50 (10x)	**794-619**	**794-5619**	**794-4619**	

WMB Multi Marking Systems

for Terminal Widths 3.5 mm, 4 … 4.2 mm and from 5 mm

	10 strips with 10 markers per card for terminal widths 5 … 17.5 mm and 5 … 5.2 mm and 4 … 4.2 mm and 3.5 mm

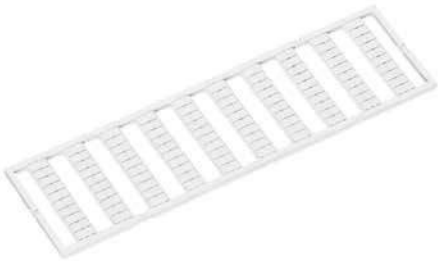



❶ For continuous marking of 270, 280, 780, 869, 870 and 880 Series terminal blocks
Individual marking of 281 … 285, 781 … 785, 2002, 2003, 2022, 2004, 2006, 2010 and 2016 Series terminal blocks
❷ For continuous marking of 270, 280, 780, 869, 870, 880, 2002, 2003 and 2022 Series terminal blocks
Individual marking of terminal blocks larger than 5 / 5.2 mm
❸ For continuous marking of 279 and 2001 Series terminal blocks
❹ For continuous marking of 2000 and 2020 Series terminal blocks

Marking	Marker Width 5 mm ❶	Marker Width 5 … 5.2 mm ❷	Marker Width 4 … 4.2 mm ❸	Marker Width 3.5 mm ❹
decade marking with red printing, horizontal marking,				
two strips each with same numbers				
10, 20 … 50 (20x)	**793-553**	**793-5553**	**793-4553**	upon request
60, 70 … 100 (20x)	**793-554**	**793-5554**	**793-4554**	
110, 120 … 150 (20x)	**793-555**	**793-5555**	**793-4555**	
160, 170 … 200 (20x)	**793-556**	**793-5556**	**793-4556**	
one strip each with same numbers				
210, 220 … 300 (10x)	**793-557**	**793-5557**	**793-4557**	
310, 320 … 400 (10x)	**793-558**	**793-5558**	**793-4558**	
410, 420 … 500 (10x)	**793-559**	**793-5559**	**793-4559**	
510, 520 … 600 (10x)	**793-560**	**793-5560**	**793-4560**	
610, 620 … 700 (10x)	**793-561**	**793-5561**	**793-4561**	
710, 720 … 800 (10x)	**793-562**		**793-4562**	
810, 820 … 900 (10x)	**793-563**		**793-4563**	
910, 920 … 1000 (10x)	**793-564**	**793-5564**	**793-4564**	
decade marking with red printing, vertical marking,				
two strips each with same numbers				
10, 20 … 50 (20x)	**793-653**	**793-5653**	**793-4653**	upon request
60, 70 … 100 (20x)	**793-654**	**793-5654**	**793-4654**	
110, 120 … 150 (20x)	**793-655**	**793-5655**	**793-4655**	
160, 170 … 200 (20x)	**793-656**	**793-5656**	**793-4656**	
one strip each with same numbers				
210, 220 … 300 (10x)	**793-657**	**793-5657**	**793-4657**	
310, 320 … 400 (10x)	**793-658**	**793-5658**	**793-4658**	
410, 420 … 500 (10x)	**793-659**	**793-5659**	**793-4659**	
510, 520 … 600 (10x)	**793-660**		**793-4660**	
610, 620 … 700 (10x)	**793-661**		**793-4661**	
710, 720 … 800 (10x)	**793-662**	**793-5662**	**793-4662**	
810, 820 … 900 (10x)	**793-663**	**793-5663**	**793-4663**	
910, 920 … 1000 (10x)	**793-664**	**793-5664**	**793-4664**	

Mini-WSB Quick Marking System and T Marker Tag

for Terminal Blocks with Mini-WSB Marker Slots

Mini-WSB Quick marking system horizontal marking 10 strips with 10 markers per card		T marker tag plain

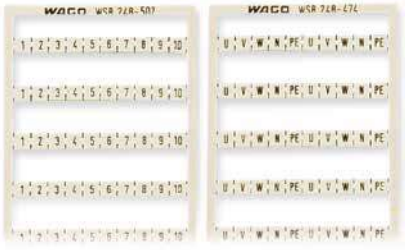



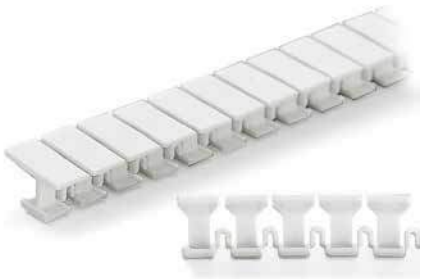

Mini-WSB Quick marking system

	Item No.	Pack. Unit
◯ 1 ... 10 (10x)	**248-502**	5
◯ 11 ... 20 (10x)	**248-503**	5
◯ 21 ... 30 (10x)	**248-504**	5
◯ 31 ... 40 (10x)	**248-505**	5
◯ 41 ... 50 (10x)	**248-506**	5
◯ 51 ... 60 (10x)	**248-569**	5
◯ 61 ... 70 (10x)	**248-570**	5
◯ 71 ... 80 (10x)	**248-571**	5
◯ 81 ... 90 (10x)	**248-572**	5
◯ 91 ... 100 (10x)	**248-573**	5

Mini-WSB Quick marking system

	Item No.	Pack. Unit
◯ 1 ... 50 (2x)	**248-566**	5

Mini-WSB Quick marking system

	Item No.	Pack. Unit
◯ U, V, W, N, PE, U, V, W, N, PE (10x)	**248-474**	5

Mini-WSB Quick marking system

	Item No.	Pack. Unit
◯ L1, L2, L3, N, PE, L1, L2, L3, N, PE (10x)	**248-472**	5

Mini-WSB Quick marking system

	Item No.	Pack. Unit
◯ 1, , 2, , 3, , 4, , 5, ; to 46, , 47, , 48, , 49, , 50, ; (1x)	**264-900**	5
◯ U, , V, , W, , N, , PE, ; (10x)	**264-901**	5
◯ L1, , L2, , L3, , N, , PE, ; (10x)	**264-902**	5
◯ 1, , 1, , 1, , 1, , 1, ; (10x)	**264-903**	5
◯ 2, , 2, , 2, , 2, , 2, ; (10x)	**264-904**	5
◯ 3, , 3, , 3, , 3, , 3, ; (10x)	**264-905**	5

Mini-WSB Quick marking system, white, 10 strips with 10 markers per card, 5 mm wide markers

	Item No.	Pack. Unit
◯ plain	**248-501**	5
Marker cards in different colors:		
yellow	**248-501/000-002**	5
red	**248-501/000-005**	5
blue	**248-501/000-006**	5
gray	**248-501/000-007**	5
orange	**248-501/000-012**	5
light green	**248-501/000-017**	5
green	**248-501/000-023**	5
violet	**248-501/000-024**	5



Mini-WSB Inline, plain, 1,700 markers (5 mm) per reel, 5 ... 5.2 mm stretchable

	Item No.	Pack. Unit
◯ white	**2009-145**	1

T marker tag, 30 markers each tag, up to 6 characters per marker, 5 ... 6 mm stretchable, factory inkjet marking upon request

	Item No.	Pack. Unit
◯ plain	**209-290**	50



Marking with T-marker tag (209-290).

Marker Cards, Plain and Marking Strips

WMB Multi marking system	WMB Multi marking system	WMB Inline and marking strips

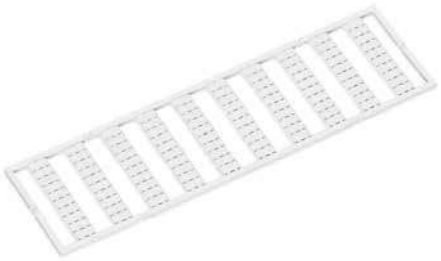

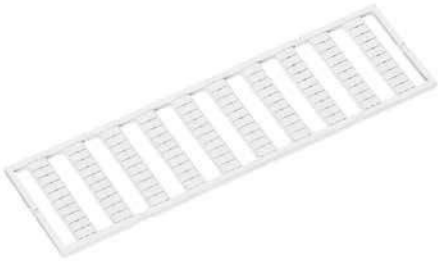



	Item No.	Pack. Unit
WMB Multi marking system, for 5 ... 17.5 mm terminal block width, 10 strips with 10 markers per card		
◯ plain	**793-501**	5
Marker cards in different colors:		
yellow	**793-501/000-002**	5
red	**793-501/000-005**	5
blue	**793-501/000-006**	5
gray	**793-501/000-007**	5
orange	**793-501/000-012**	5
light green	**793-501/000-017**	5
green	**793-501/000-023**	5
violet	**793-501/000-024**	5

	Item No.	Pack. Unit
WMB Multi marking system, white, 10 strips with 10 markers per card, 5 ... 5.2 mm stretchable		
◯ plain	**793-5501**	5
Marker cards in different colors:		
yellow	**793-5501/000-002**	5
red	**793-5501/000-005**	5
blue	**793-5501/000-006**	5
gray	**793-5501/000-007**	5
orange	**793-5501/000-012**	5
light green	**793-5501/000-017**	5
green	**793-5501/000-023**	5
violet	**793-5501/000-024**	5

	Item No.	Pack. Unit
WMB Inline, plain, 1,500 WMB markers (5 mm) per reel, 5 ... 5.2 mm stretchable		
◯ white	**2009-115**	1
WMB Inline, plain, 2,000 WMB markers (4 mm) per reel, 4 ... 4.2 mm stretchable		
◯ white	**2009-114**	1
WMB Inline, plain, 2,300 WMB markers (3.5 mm) per reel		
◯ white	**2009-113**	1

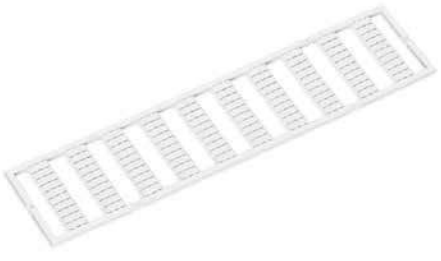

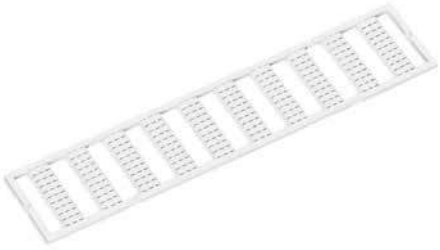



	Item No.	Pack. Unit
WMB Multi marking system, white, 10 strips with 10 markers per card, 4 ... 4.2 mm stretchable		
◯ plain	**793-4501**	5
Marker cards in different colors:		
yellow	**793-4501/000-002**	5
red	**793-4501/000-005**	5
blue	**793-4501/000-006**	5
gray	**793-4501/000-007**	5
orange	**793-4501/000-012**	5
light green	**793-4501/000-017**	5
green	**793-4501/000-023**	5
violet	**793-4501/000-024**	5

	Item No.	Pack. Unit
WMB Multi marking system, white, 10 strips with 10 markers per card, for 3.5 mm terminal block width		
◯ plain	**793-3501**	5

	Item No.	Pack. Unit
Marking strip, plain, 11 mm wide, 50 m reel		
◯ white	**2009-110**	1

13

Marker Branches and Double Marker Carrier

Group marker carrier	Double marker carrier





	Item No.	Pack. Unit
Group marker carrier, angled, e.g., for transformer terminal blocks (282 Series)		
gray	**209-144**	50 (2x25)
Group marker carrier, straight, e.g., for 2- and 3-conductor terminal blocks (282 Series)		
gray	**209-143**	50 (2x25)

	Item No.	Pack. Unit
Double marker carrier, for WSB and WMB marking systems, for center I/O module marking, 4 mm wide		
gray	**209-128**	200 (2x100)



Group marker carriers (209-144) make it possible to mark subgroups in confined spaces. They can be snapped into the jumper slots of the terminal blocks.
Marking system: WMB markers



Snapping a strip into the marker slot of the double marker carrier.

Group Marker Carriers (Height-Adjustable) and Movable Marking System

Height-adjustable group marker carrier	Carrier-through element





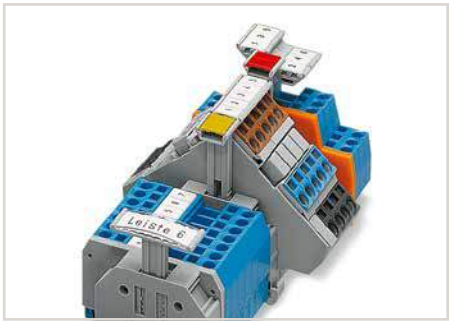

Receptacles for:
1 x marker
2 x WMB (Multi marking) or
1 x WFB (Continuous marking strips)

	Item No.	Pack. Unit
Height-adjustable group marker carrier, snap-on type and height-adjustable from 43.5 ... 59.5 mm in (249-116 and 249-117) end stops, for 1 marker or self-adhesive label and transparent protection covers, 10 mm wide		
gray	**249-119**	50 (2x25)
Height-adjustable group marker carrier, snap-on type and height-adjustable from 43.5 ... 59.5 mm in (249-116 and 249-117) end stops, for 2 WMB markers or 1 x continuous strip, 10 mm wide		
gray	**249-118**	100 (4x25)
Height-adjustable group marker carrier, snap-on type and height-adjustable from 42.2 ... 58.2 mm in (249-116 and 249-117) end stops, with marker surface, 6 mm wide		
white	**249-120**	50 (2x25)
Height-adjustable group marker carrier, snap-on type and height-adjustable from 45 ... 61 mm in (249-116 and 249-117) end stops, for 2 WMB markers or 1 x TOPJOB®S marking strips, 12.2 mm wide		
gray	**2009-163**	50 (2x25)

	Item No.	Pack. Unit
Carrier-through element, height-adjustable		
gray	**709-118**	50 (2x25)
Carrier-end element, height-adjustable		
gray	**709-119**	50 (2x25)

Item-Specific Accessories

		Item No.	Pack. Unit
Marking strip slot, folded, 1 m long, 16 mm wide, 1.7 mm thick	transparent	**709-120**	1
Marking card, with 14 marking strips, DIN A4	plain	**709-193**	1

This system can be used as an additional group marker carrier or continuous marking strip carrier for terminal strips or single-deck rail-mount terminal blocks, for example:
- 264 Series terminal strips for DIN-35 rails
- 279 to 284 Series single-deck rail-mount terminal blocks, with a maximum height of 49 mm from the upper edge of the carrier rail (please observe conductor radius).



Height-adjustable group marker carrier (2009-163) for WMB markers or marking strips (2009-110) – snaps onto end stops.

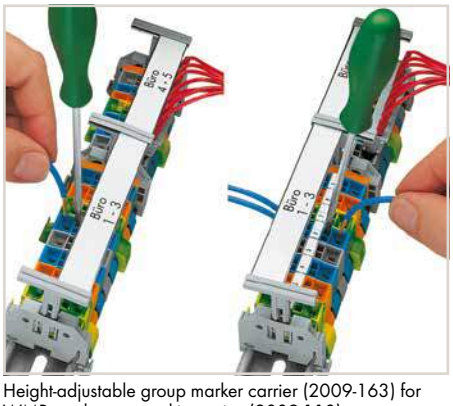

Height-adjustable group marker carrier (2009-163) for WMB markers or marking strips (2009-110) – snaps onto end stops.

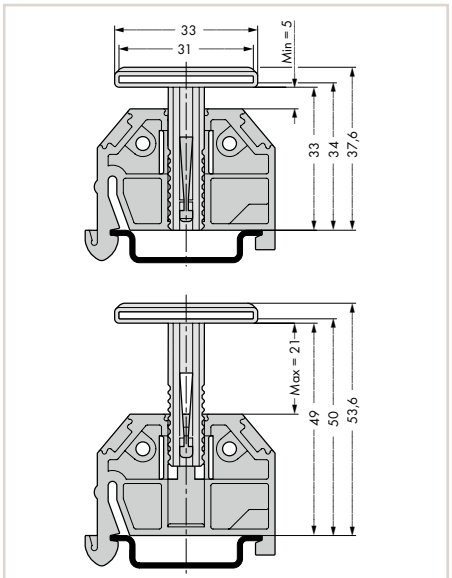

Dimensions in mm

13

Group Marker Carriers

Group marker carrier	Group marker carrier	Group marker carrier





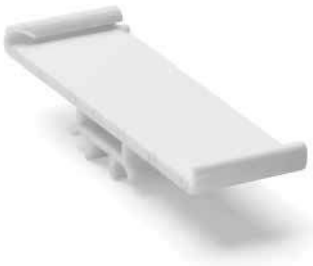

	Item No.	Pack. Unit
Group marker carrier, to insert into jumper slots of terminal blocks, for terminal block width of 4 ... 6 mm, for up to 3 WMB markers or 8 branch markers, 15 mm wide		
◯ gray	**209-140**	50 (2x25)
Group marker carrier, to insert into jumper slots of terminal blocks, for up to 2 WMB markers or 5 branch markers, 10 mm wide		
◯ gray	**209-141**	50 (2x25)
Group marker carrier, to insert into jumper slots of terminal blocks, for up to 1 WMB marker or 2 branch markers, 5 mm wide		
◯ gray	**209-142**	50 (2x25)

	Item No.	Pack. Unit
Group marker carrier, snaps onto screwless end stops (center or side mounting), 10 mm wide		
◯ white	**209-112**	100 (2x50)
Marker, from white cardboard, for self-marking, 100 markers/sheet		
◯ white	**209-113**	1
Self-adhesive label, for self-marking, 7 x 25 labels/sheet		
◯ white	**210-345**	1
Protection cover		
transparent	**209-114**	50

	Item No.	Pack. Unit
Group marker carrier, for WMB and Mini-WSB marker slots, 10 mm wide		
◯ white	**209-145**	100 (2x50)

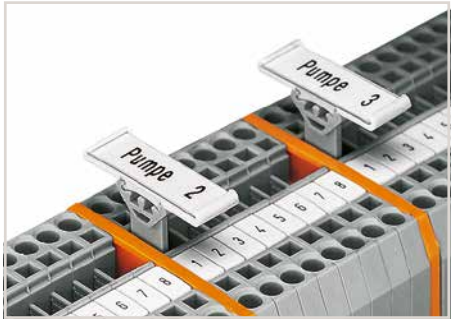

Group marker carrier (209-141 and 209-112)



Group marker carrier with marker and protection cover

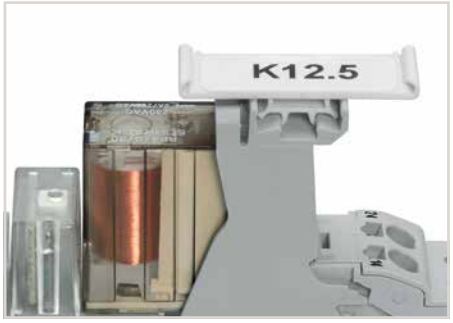

Group marker carrier (209-145)

13

Group Marker Carriers (Pivoting) and WFB Continuous Marking Strips

Pivoting group marker carrier	WFB continuous marking strip	

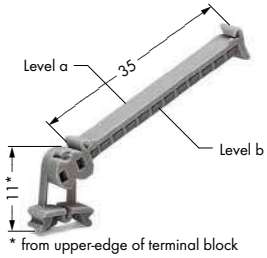



	Item No.	Pack. Unit
Pivoting group marker carrier		
gray	**249-105**	50 (2x25)
Marker card, 4 x 30 markers/sheet		
white	**209-183**	1
Protection marker cover		
transparent	**209-184**	50

	Item No.	Pack. Unit
WFB continuous marking strip, 1000 mm long, for self-marking, e.g., with felt-tip pen		
transparent	**210-612**	10
Carrier for WFB continuous marking strip, snaps into marker slot		
gray	**209-185**	200 (8x25)

Item-Specific Accessories

Felt-tip pen, for permanent marking		
	210-110	1

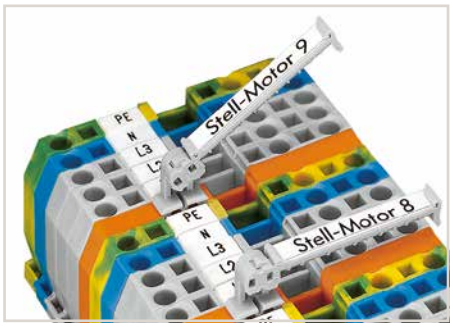

This pivoting group marker carrier has been developed for group marking of rail-mount terminal blocks to satisfy several customer requirements:

- Can be used in all multiprofile marker slots for rail-mount terminal bocks from 5 mm on or in spacer housings as shown above.
- Improves marking visibility due to difficult mounting conditions by pivoting into one of seven stable positions.



WFB (WAGO continuous marking strips)
Customized ink pen marking



Carrier for WFB Continuous marking strip; to be secures every 10th terminal block.

13

Marker Cards – Self-Adhesive Marking Strips

Self-adhesive marker strips computer-marked 40 self-adhesive strips per card Height of marking strip: 6 mm	Self-adhesive marker strips computer-marked 40 self-adhesive strips per card Height of marking strip: 6 mm	Self-adhesive marker strips computer-marked 40 self-adhesive strips per card Height of marking strip: 6 mm



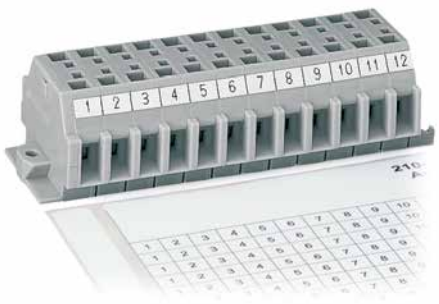

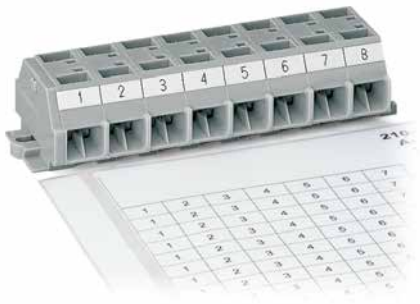

Marking	Item No.	Pack. Unit
for 260 Series 2-conductor terminal strips		
1 ... 10 (120x)	**210-333/500-002**	100
11 ... 20 (120x)	**210-333/500-003**	100
21 ... 30 (120x)	**210-333/500-004**	100
31 ... 40 (120x)	**210-333/500-005**	100
41 ... 50 (120x)	**210-333/500-006**	100
51 ... 60 (120x)	**210-333/500-007**	100
61 ... 70 (120x)	**210-333/500-008**	100
71 ... 80 (120x)	**210-333/500-009**	100
81 ... 90 (120x)	**210-333/500-010**	100
91 ... 100 (120x)	**210-333/500-011**	100
1 ... 50 (20x)	**210-333/500-021**	100
L1 (1440x)	**210-333/500-074**	100
L2 (1440x)	**210-333/500-075**	100
L3 (1440x)	**210-333/500-076**	100
N (1440x)	**210-333/500-077**	100
PE (1440x)	**210-333/500-078**	100
PEN (1440x)	**210-333/500-079**	100
only with grid spacing	**210-333/500-001**	100
for 260 Series 4-conductor terminal strips		
1 ... 10 (80x)	**210-333/800-002**	100
11 ... 20 (80x)	**210-333/800-003**	100
21 ... 30 (80x)	**210-333/800-004**	100
31 ... 40 (80x)	**210-333/800-005**	100
41 ... 50 (80x)	**210-333/800-006**	100
51 ... 60 (80x)	**210-333/800-007**	100
61 ... 70 (80x)	**210-333/800-008**	100
71 ... 80 (80x)	**210-333/800-009**	100
81 ... 90 (80x)	**210-333/800-010**	100
91 ... 100 (80x)	**210-333/800-011**	100
1 ... 40 (20x)	**210-333/800-209**	100
L1 (880x)	**210-333/800-074**	100
L2 (880x)	**210-333/800-075**	100
L3 (880x)	**210-333/800-076**	100
N (880x)	**210-333/800-077**	100
PE (880x)	**210-333/800-078**	100
PEN (880x)	**210-333/800-079**	100
only with grid spacing	**210-333/800-001**	100

Marking	Item No.	Pack. Unit
for 261 Series 2-conductor terminal strips		
1 ... 12 (80x)	**210-333/600-103**	100
13 ... 24 (80x)	**210-333/600-104**	100
25 ... 36 (80x)	**210-333/600-105**	100
37 ... 48 (80x)	**210-333/600-106**	100
41 ... 50 (80x)	**210-333/600-006**	100
51 ... 60 (80x)	**210-333/600-007**	100
61 ... 70 (80x)	**210-333/600-008**	100
71 ... 80 (80x)	**210-333/600-009**	100
81 ... 90 (80x)	**210-333/600-010**	100
91 ... 100 (80x)	**210-333/600-011**	100
1 ... 50 (20x)	**210-333/600-021**	100
L1 (1200x)	**210-333/600-074**	100
L2 (1200x)	**210-333/600-075**	100
L3 (1200x)	**210-333/600-076**	100
N (1200x)	**210-333/600-077**	100
PE (1200x)	**210-333/600-078**	100
PEN (1200x)	**210-333/600-079**	100
only with grid spacing	**210-333/600-001**	100
for 261 Series 4-conductor terminal strips		
1 ... 16 (40x)	**210-333/1000-202**	100
17 ... 32 (40x)	**210-333/1000-204**	100
33 ... 48 (40x)	**210-333/1000-206**	100
49 ... 64 (40x)	**210-333/1000-110**	100
65 ... 80 (40x)	**210-333/1000-111**	100
81 ... 96 (40x)	**210-333/1000-112**	100
97 ... 112 (40x)	**210-333/1000-113**	100
1 ... 36 (20x)	**210-333/1000-208**	100
L1 (720x)	**210-333/1000-074**	100
L2 (720x)	**210-333/1000-075**	100
L3 (720x)	**210-333/1000-076**	100
N (720x)	**210-333/1000-077**	100
PE (720x)	**210-333/1000-078**	100
PEN (720x)	**210-333/1000-079**	100
only with grid spacing	**210-333/1000-001**	100

Marking	Item No.	Pack. Unit
for 262 Series 2-conductor terminal strips		
1 ... 20 (40x)	**210-333/700-020**	100
21 ... 40 (40x)	**210-333/700-108**	100
41 ... 60 (40x)	**210-333/700-109**	100
1 ... 50 (20x)	**210-333/700-021**	100
L1 (1040x)	**210-333/700-074**	100
L2 (1040x)	**210-333/700-075**	100
L3 (1040x)	**210-333/700-076**	100
N (1040x)	**210-333/700-077**	100
PE (1040x)	**210-333/700-078**	100
PEN (1040x)	**210-333/700-079**	100
only with grid spacing	**210-333/700-001**	100
for 262 Series 4-conductor terminal strips		
1 ... 12 (40x)	**210-333/1200-103**	100
13 ... 24 (40x)	**210-333/1200-104**	100
25 ... 36 (40x)	**210-333/1200-105**	100
37 ... 48 (40x)	**210-333/1200-106**	100
49 ... 60 (40x)	**210-333/1200-107**	100
1 ... 24 (20x)	**210-333/1200-203**	100
L1 (600x)	**210-333/1200-074**	100
L2 (600x)	**210-333/1200-075**	100
L3 (600x)	**210-333/1200-076**	100
N (600x)	**210-333/1200-077**	100
PE (600x)	**210-333/1200-078**	100
PEN (600x)	**210-333/1200-079**	100
only with grid spacing	**210-333/1200-001**	100

Marker Cards – Self-Adhesive Marking Strips (Plain)

Self-adhesive marking strips



	Item No.	Pack. Unit
Self-adhesive marking strips, plain, grid adjustable		
Length of marking strip: 182 mm		
Height of marking strip: 2.3 mm, 100 self-adhesive strips per card		
◯	**210-331**	100
Height of marking strip: 3 mm, 80 self-adhesive strips per card		
◯	**210-332**	100
Height of marking strip: 5 mm, 48 self-adhesive strips per card		
◯	**210-334**	100
Height of marking strip: 9 mm, 25 self-adhesive strips per card		
◯	**210-335**	100
Height of marking strip: 6 mm, 40 self-adhesive strips per card		
◯	**210-333**	100

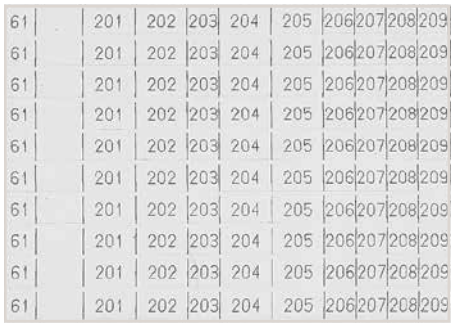

Other markings with different spacings for 2- and 4-conductor terminal blocks are available upon request.

Screwless End Stops for DIN-35 Rails

Screwless end stop

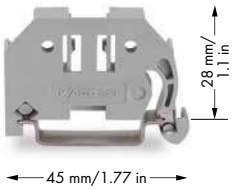

45 mm/1.77 in

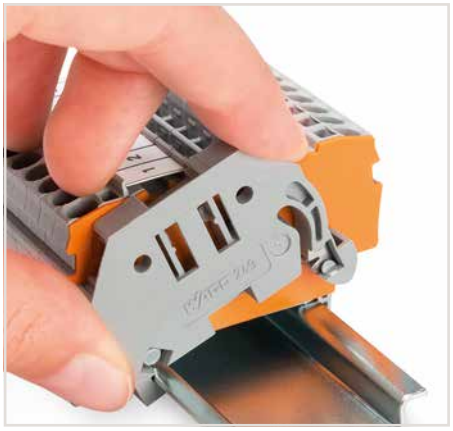

Simply snap on.

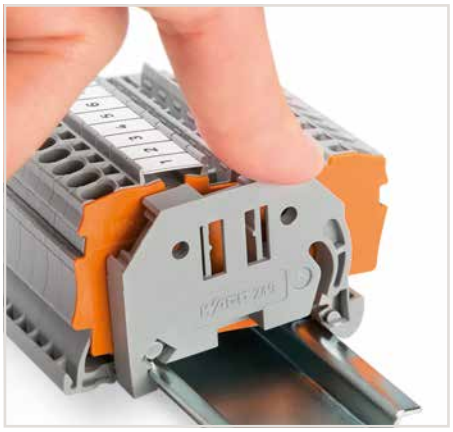



That's it!



Removing an end stop from the DIN-rail.

	Item No.	Pack. Unit
Screwless end stop, for DIN-35 rail, 6 mm wide		
gray	**249-116**	100 (4x25)
Screwless end stop, for DIN-35 rail, 10 mm wide		
gray	**249-117**	50 (2x25)



60 mm/2.36 in

	Item No.	Pack. Unit
Screwless end stop, for DIN-35 rail, 14 mm wide		
gray	**249-197**	10

Snap on – that's it! Assembling the new WAGO screwless end stop is as simple and quick as snapping a WAGO rail-mount terminal block onto the rail.

Without any tools!

This allows rail-mount terminal blocks to be safely secured, at low cost, against any movement on all DIN-35 rails per DIN EN 50022 (35 x 7.5 mm; 35 x 15 mm).

Entirely without screws!

The "secret" of the excellent tight fit lies in the two small clamping plates that keep the end stop in position, even if the rails are mounted vertically.

Simply snap on – that's it!

In addition, costs are significantly reduced when using large numbers of end stops.

Additional benefit: Three marker slots for all WAGO rail-mount terminal block markers and one snap-in hole for WAGO adjustable height group marker carriers offer individual marking options.

Mounting Carrier

Mounting carrier		



	Item No.	Pack. Unit		
Mounting carrier, for isolated mounting on DIN-35 rails				
gray	**209-106**	25		



Isolated mounting of a carrier rail in a distribution box for protection class II

Mounting Accessories
Carrier Rails, Rail End Cap, Angled Support Brackets and Collective Carriers

Carrier rail per EN 60715	Carrier rail similar to EN 60715	Carrier rail per EN 60715







	Item No.	Pack. Unit
Steel carrier rail, I_N 76 A (based on 1 m length), 35 x 7.5 mm, 1 mm, 2 m long		
unslotted	**210-113**	10
Hole width 25 mm; hole spacing 36 mm		
slotted	**210-112**	10 (10x1)
Hole width 18 mm; hole spacing 25 mm		
slotted	**210-115**	1

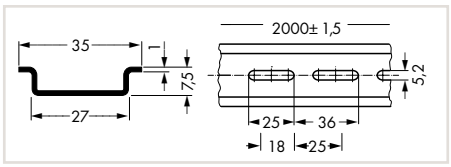

Dimensions in mm

	Item No.	Pack. Unit
Steel carrier rail, I_N 125 A (based on 1 m length), 35 x 15 mm, 1.5 mm, 2 m long		
unslotted	**210-114**	10
slotted	**210-197**	10

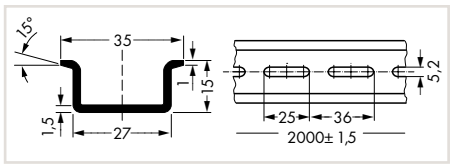

Dimensions in mm

	Item No.	Pack. Unit
Steel carrier rail, I_N 125 A (based on 1 m length), 35 x 15 mm, 2.3 mm, 2 m long		
unslotted	**210-118**	10

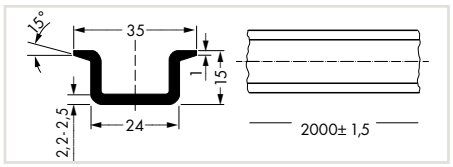

Dimensions in mm







	Item No.	Pack. Unit
Copper carrier rail, I_N 309 A (based on 1 m length), 35 x 15 mm, 2.3 mm, 2 m long		
unslotted	**210-198**	10

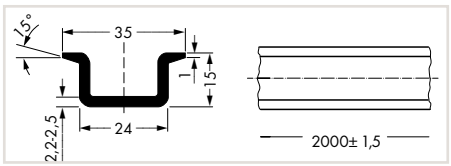

Dimensions in mm

	Item No.	Pack. Unit
Aluminum carrier rail, I_N 76 A (based on 1 m length), 35 x 8.2 mm, 1.6 mm, 2 m long		
unslotted	**210-196**	10

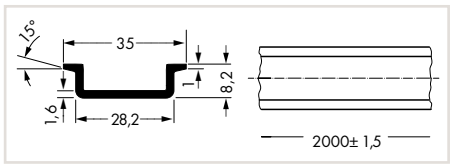

Dimensions in mm

	Item No.	Pack. Unit
Rail end cap, for DIN-35 rail (7.5 mm high)		
gray	**209-109**	50 (2x25)



Dimensions in mm

Carrier rail per EN 60715



	Item No.	Pack. Unit
Steel carrier rail, I_N 76 A (based on 1 m length), 35 x 7.5 mm, 1 mm, 2 m long		
unslotted	**210-505**	1
slotted	**210-504**	1

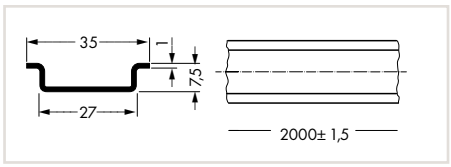

Dimensions in mm

Angled support bracket



	Item No.	Pack. Unit
Angled support bracket, without screw		
	210-148	10
Screw M5 x 8		
	210-149	100 (5x20)

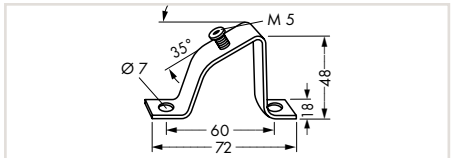

Dimensions in mm

Collective carrier for jumpers

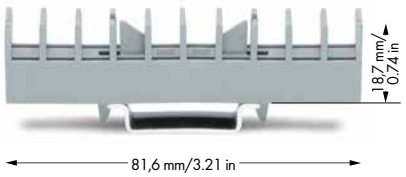

	Item No.	Pack. Unit
Collective jumper carrier, for DIN-35 rail, compatible with jumpers for transverse switching terminal block (282-811) and longitudinal switching disconnect terminal block (282-821)		
◯ gray	**282-369**	25
The collective carrier can be snapped onto DIN-35 rails. It serves as a depository for jumpers during maintenance.		

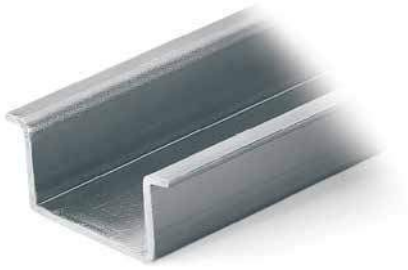

	Item No.	Pack. Unit
Steel carrier rail, I_N 125 A (based on 1 m length), 35 x 15 mm, 1.5 mm, 2 m long		
unslotted	**210-506**	1
slotted	**210-508**	1

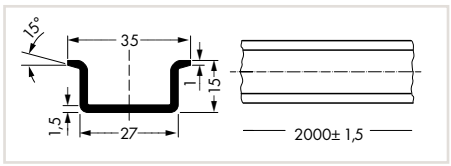

Dimensions in mm



	Item No.	Pack. Unit
Collective carrier for adjacent jumpers, for DIN-35 rail, for 279 to 284 Series adjacent jumpers and 215 Series banana plugs		
◯ gray	**209-100**	50 (2x25)
The collective carrier can be snapped onto DIN-35 rails. It serves as a depository for adjacent jumpers and banana plugs during maintenance work.		

13

Transparent Covers for Rail-Mount Terminal Blocks, Usable with Lead Seals, 709 Series

Description and Installation

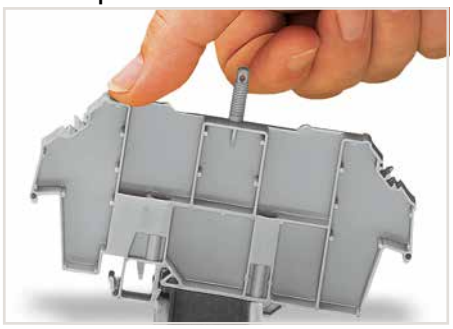

Snapping a cover carrier onto the DIN-rail.



Application example:
Cover (type 1) without safety warning



Application example:
Cover (type 1) with safety warning

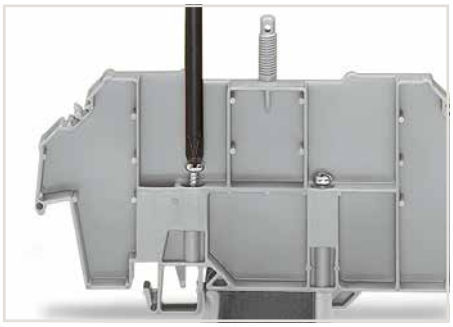

Tightening both securing screw (left) and mounting screw (right).



Application example:
Cover (type 2) with safety warning

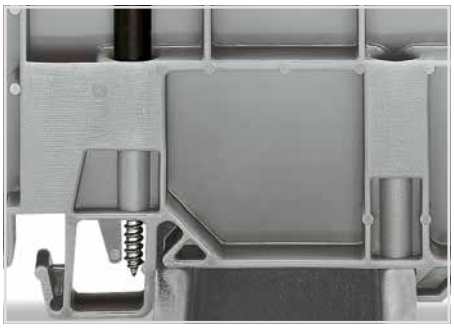

Securing screw – prevents lifting off from the rail.
Mounting screw – prevents the cover carrier from being moved on the rail.

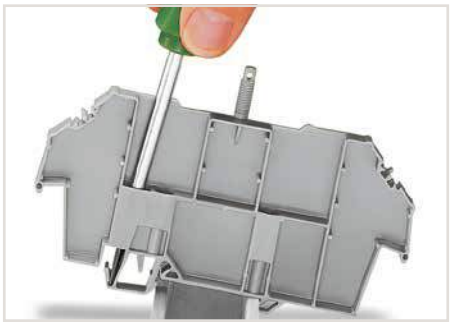

Removing a cover carrier from the DIN-rail.

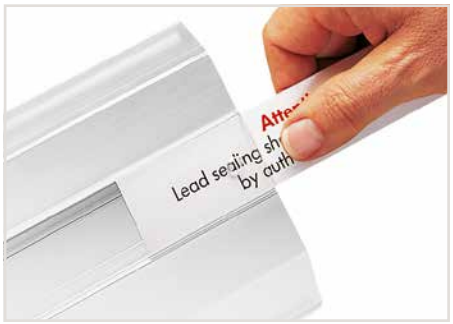

Inserting a marking strip into the cover.



Cover with lead seals:
Using covers without lead seals, the thread dome-head can be broken off.

13

Transparent Covers for Rail-Mount Terminal Blocks, Usable with Lead Seals

709 Series





	Item No.	Pack. Unit
Cover, type 1, for cover carrier type 1, 1 m long		
transparent	**709-153**	10

	Item No.	Pack. Unit
Cover, type 2, for cover carrier type 2, 1 m long		
transparent	**709-154**	10

Accessories

Marking card, with 6 marking strips, for group marking or safety instructions

plain **709-183** 1

Spare mounting/securing screw, for cover



209-196 200 (8x25)

Spare knurled nut, for cover



210-549 100 (4x25)





	Item No.	Pack. Unit
Cover carrier, type 1, incl. mounting/securing screws and knurled nut, for 279 to 282, 880 Series rail-mount terminal blocks, for 264 Series miniature terminal blocks, for 270 Series sensor and actuator blocks		
◯ gray	**709-167**	10

	Item No.	Pack. Unit
Cover carrier, type 2, incl. mounting/securing screws and knurled nut, for 283 to 285 Series rail-mount terminal blocks, for 279 to 281 Series double- and triple-deck blocks, for 780 to 785 and 775 Series TOPJOB® terminals, for 280 Series sensor and actuator blocks, for 282 Series disconnect/test terminal blocks for transformer circuits		
◯ gray	**709-168**	10

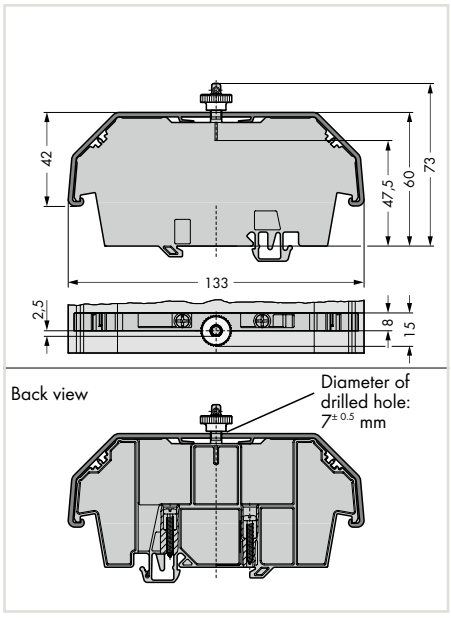

Dimensions in mm

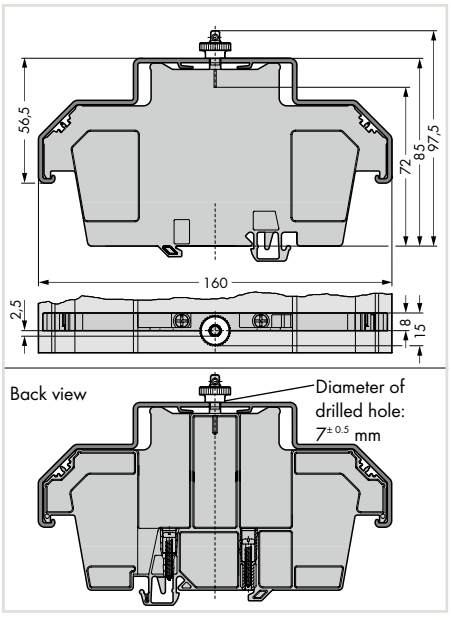

Dimensions in mm

13

Transparent Covers for Rail-Mount Terminal Blocks, Usable with Lead Seals
709 Series



	Item No.	Pack. Unit
Cover, type 3, for cover carrier, type 3, 1 m long		
transparent	**709-156**	10



	Item No.	Pack. Unit
Cover carrier, type 3, incl. mounting/securing screws and knurled nut, for TOPJOB® S rail-mount terminal blocks (2000 to 2016 Series), for transformer terminal blocks (2007 Series)		
◯ gray	**709-169**	10

Accessories

Marking strip, plain, 11 mm wide, 50 m reel		
white	**2009-110**	1
Spare mounting/securing screw, for cover		
	209-196	200 (8x25)
Spare knurled nut, for cover		
	210-549	100 (4x25)

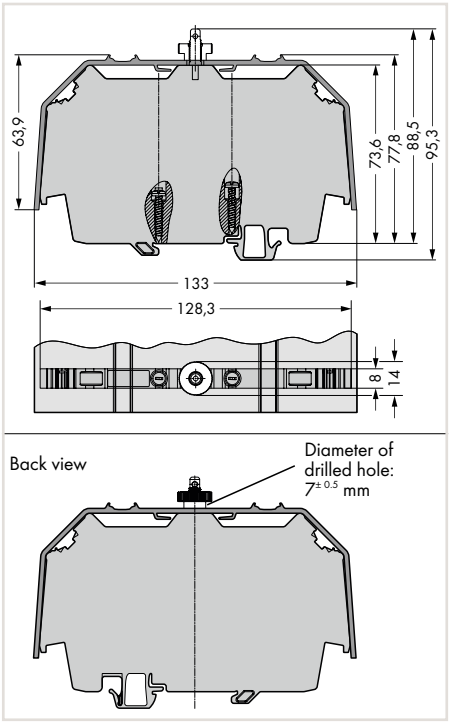

Dimensions in mm

13

Mounting Accessories
Carrier Rails and Screwless End Stops for DIN-15 Rails

Carrier rail per EN 60715	Carrier rail similar to EN 60715	Screwless end stop







Item No.		Pack. Unit
Steel carrier rail, I_N 57 A (based on 1 m length), 15 x 5.5 mm, 1 mm, 2 m long		
slotted	**210-111**	1

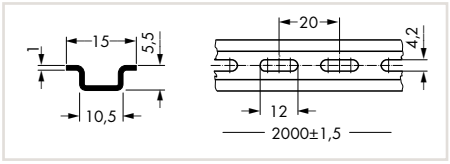

Dimensions in mm

Item No.		Pack. Unit
Aluminum carrier rail, I_N 57 A (based on 1 m length), 15 x 5.5 mm, 1 mm, 2 m long		
unslotted	**210-296**	10

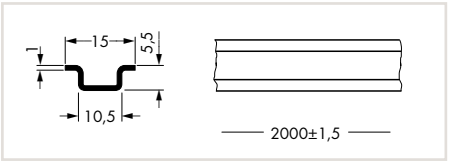

Dimensions in mm

Item No.		Pack. Unit
Screwless end stop, for DIN-15 rail, 6 mm wide		
gray	**249-101**	25



Item No.		Pack. Unit
Steel carrier rail, I_N 57 A (based on 1 m length), 15 x 5.5 mm, 1 mm, 2 m long		
unslotted	**210-295**	1

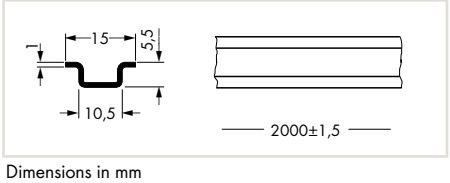

Dimensions in mm

13

Operating Tools

Operating tool with a partially insulated shaft	Operating tool set with a partially insulated shafts	Operating tool with a partially insulated shaft







Item No.	Pack. Unit	Item No.	Pack. Unit	Item No.	Pack. Unit
Operating tool with a partially insulated shaft, type 1, (2.5 x 0.4) mm blade, for 279, 726, 727, 2000, 2001 and 2020 Series		Operating tool set with a partially insulated shafts, type 1, (2.5 x 0.4) mm blade, type 2, (3.5 x 0.5) mm blade, type 3, (5.5 x 0.8) mm blade		Operating tool with a partially insulated shaft, (2.5 x 0.4) mm blade, short, for 279, 726, 727, 2000, 2001 and 2020 Series	
210-719	1	**210-722**	1	**210-647**	1
Operating tool with a partially insulated shaft, type 2, (3.5 x 0.5) mm blade, for 260, 261, 262, 264, 270, 280, 281, 290, 775, 776, 777, 769, 780, 781, 869, 870, 880, 2002, 2003, 2004, 2005 and 2022 Series				Operating tool with a partially insulated shaft, (2.5 x 0.4) mm blade, short angled, for 279, 2000, 2001 and 2020 Series	
210-720	1			**210-648**	1
Operating tool with a partially insulated shaft, type 3, (5.5 x 0.8) mm blade, for 282, 283, 284, 285, 782, 783, 784, 785, 2006, 2010 and 2016 Series					
210-721	1				

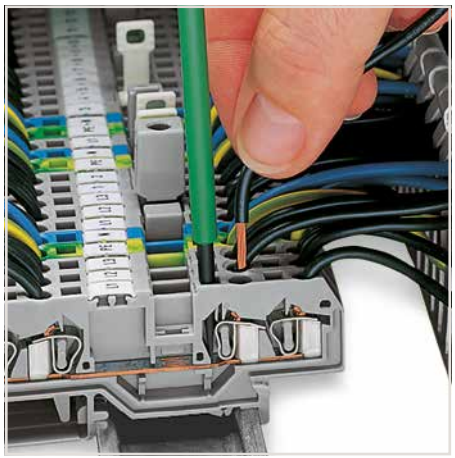

The blade dimensions of the above-listed operating tools with a partially insulated shaft are ideal for easy operation of front-entry terminal blocks.



Set of operating tools in a box

Operating Tools

Operating tool with a partially insulated shaft	Operating tool	Operating pliers







Item No.	Pack. Unit		Item No.	Pack. Unit	Item No.	Pack. Unit
Operating tool with a partially insulated shaft, (3.5 x 0.5) mm blade, short, for 260, 261, 262, 264, 270, 280, 281, 869, 870, 880 Series			Operating tool, of insulating material, for 279 Series		Operating pliers, for for side-entry rail-mount terminal blocks (279 and 280 Series)	
210-657	1	1-way	**209-129**	1	**210-143**	1
		2-way	**279-432**	1		
		3-way	**279-433**	1		
		10-way	**279-440**	1		
Operating tool with a partially insulated shaft, (3.5 x 0.5) mm blade, short angled, ideal for 280 Series actuator/sensor terminal blocks and 260, 261, 262, 264, 280, 281, 869, 870, 880, 2002 and 2004 Series			Operating tool, of insulating material, for 264 Series (1- and 2-way only) and 280, 281 Series (up to 3-way only)		Operating pliers, for side-entry rail-mount terminal blocks (281, 282, 283 and 284 Series)	
210-658	1	1-way	**209-130**	1	**210-141**	1
		2-way	**280-432**	1		
		3-way	**280-433**	1		
		4-way	**280-434**	1		
		5-way	**280-435**	1		
		6-way	**280-436**	1		
		7-way	**280-437**	1		
		8-way	**280-438**	1		
		9-way	**280-439**	1		
		10-way	**280-440**	1		
			Operating tool, of insulating material, for 281 Series		The operating pliers is placed into the upper operating slot of the side-entry rail-mount terminal block and the clamp is hooked into the lateral operating slot. The contact is fully opened by pressing the handles together until they engage – both hands are then free for conductor preparation and insertion into the terminal block.	
		5-way	**281-440**	1		

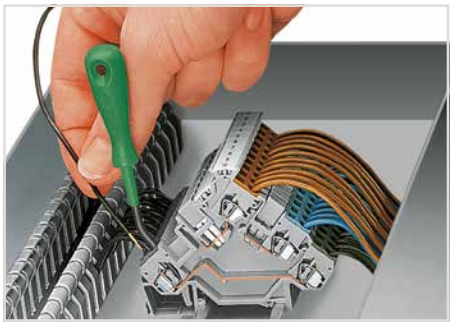

The blade dimensions (DIN 5264) of the above-listed operating tools are ideal for operating 280 Series Front-Entry Sensor/Actuator Terminal Block.



Commoning front-entry disconnect terminal blocks via comb-style jumper bar using a 10-pole operating tool.

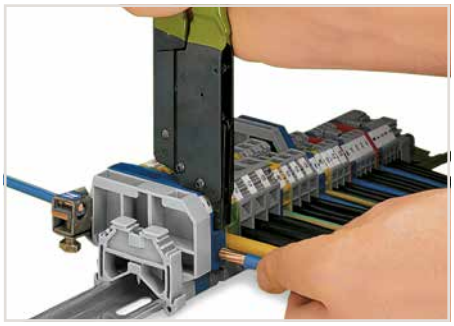

When operating the handles beyond the locked position, the ratchet allows the tool to open and be removed from the terminal block.

Cable Strippers

Cable stripper for round cables with outer diameter from 2.5 ... 11 mm	Cable stripper for round cables with outer diameter from 4.5 ... 45 mm



Set the cable diameter.





Item No.	Pack. Unit	Item No.	Pack. Unit
Cable stripper, for round cables with outer diameter, 2.5 ... 11 mm		Cable stripper, for round cables with outer diameter, 4.5 ... 45 mm	
206-171	1	**206-174**	1
Item-Specific Accessories		**Item-Specific Accessories**	
Replacement blade, 2.5 ... 11 mm Ø		Replacement blade, 4.5 ... 45 mm Ø	
 **206-170**	1	 **206-173**	1



Strip the cable.

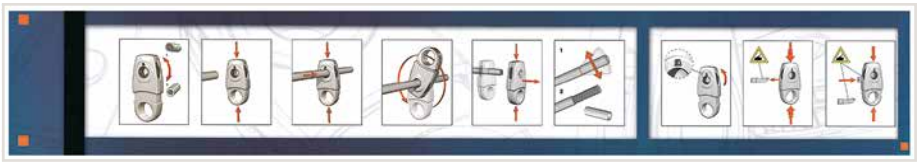

Cable Stripper (206-171):
- 10-position adjustment wheel ensures consistent stripping results
- Precision via 10-position blade cutting depth adjustment
- Strips the sheath from multi-core and fiber optic cables up to 11 mm/0.43 inch diameter
- Safe and easy to use through closed stripping cavity



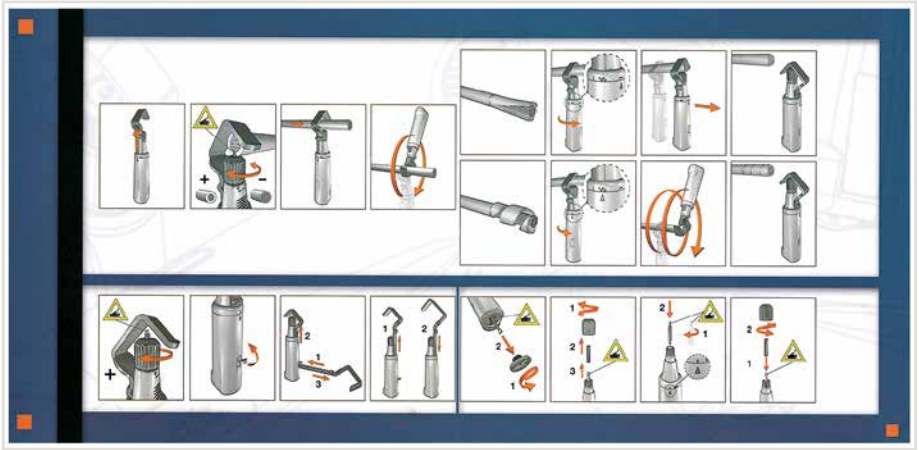

Cable Stripper (206-174):
- Safe and easy to use: Three locking positions for circular, longitudinal and spiral cuts
- High cable stripping capacity of up to 45 mm diameter
- Ergonomic design features rests for thumb, index and pinky fingers to ease raising of the cable retention hook
- Replacement blades can be stored within the tool's handle



Stripping Tools

"Quickstrip 10" wire stripper 0.02 ... 10 mm² "f-st" (6 mm² "s") wire cutter up to 10 mm² "f-st" (1.5 mm² "s")	"Quickstrip 16" wire stripper 4 ... 16 mm² wire cutter up to 10 mm² "f-st" (1.5 mm² "s")	





Item No.	Pack. Unit	Item No.	Pack. Unit	Item No.	Pack. Unit
"Quickstrip 10" wire stripper		"Quickstrip 16" wire stripper		Spare clamping jaws	
206-124	1	**206-125**	1	**206-105**	1
Item-Specific Accessories		**Item-Specific Accessories**			
"Standard" blade cassette, 0.02 ... 10 mm²		"Standard" blade cassette, 4 ... 16 mm²			
 **206-126**	1	 **206-128**	1		
V-blade cassette, 0.1 ... 4 mm², for PTFE					
 **206-127**	1				



Cutting a conductor.



Stripping a conductor.

Wire Strippers:
- Automatically adjust to conductor size
- Stripping blades cause no damage to conductor strands
- Gripping pressure of jaws adjusts automatically to conductor insulation diameter
- Clamping jaws and stripping blades automatically open once the stripping process is completed – no splaying of the conductor strands
- Exact strip length may be set by sliding black setting stop
- Stripping blades can be replaced
- Self-sharpening, fully protected cutter (replaceable*)
- Entire body made of glass-fiber-reinforced polyamide

*applies to Microstrip

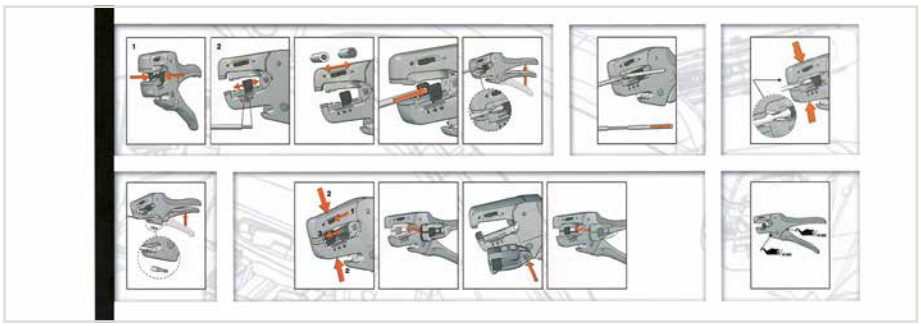

Operating instructions are included.

Crimping Tools

"Variocrimp 4" crimping tool for insulated and uninsulated ferrules 0.25 ... 4 mm² / 24 ... 12 AWG	"Variocrimp 16" crimping tool for insulated and uninsulated ferrules 6 ... 16 mm² / 10 ... 6 AWG





Item No.	Pack. Unit	Item No.	Pack. Unit
"Variocrimp 4" crimping tool, 0.25 ... 4 mm² / 24 ... 12 AWG		"Variocrimp 16" crimping tool, 6 ... 16 mm² / 10 ... 6 AWG	
206-204	1	**206-216**	1
Return spring for Variocrimp 4		Return spring for Variocrimp 16	
206-203	1	**206-213**	1
Ratchet spring		Ratchet spring	
206-210	1	**206-210**	1



Insert the ferruled conductor into the crimping station.



Squeeze handles until ratchet mechanism is released.

Insulated Ferrules



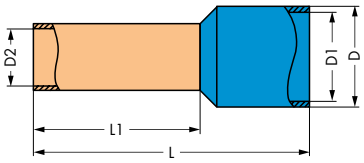

Ferrule, insulated, electro-tin-plated, electrolytic copper, gastight crimped, per DIN 46288, Part 4/09.09									
Conductor Size	Color	Strip Length	L	L 1	D	D 1	D 2	**Item No.**	Pack. Unit
0.25 mm² / 24 AWG	yellow	7 mm / 0.28 inch	10	6	2,3	1,8	0,5	**216-321**	1000
0.25 mm² / 24 AWG	yellow	9 mm / 0.35 inch	12	8	2,3	1,8	0,5	**216-301**	1000
0.34 mm² / 22 AWG	green	7 mm / 0.28 inch	10	6	2,5	2	0,5	**216-322**	1000
0.34 mm² / 22 AWG	green	9 mm / 0.35 inch	12	8	2,5	2	0,5	**216-302**	1000
0.5 mm² / 20 AWG	white	7 mm / 0.28 inch	12	6	3,1	2,6	1	**216-221**	1000
0.5 mm² / 20 AWG	white	9 mm / 0.35 inch	14	8	3,1	2,6	1	**216-201**	1000
0.75 mm² / 18 AWG	gray	8 mm / 0.31 inch	12	6	3,3	2,8	1,2	**216-222**	1000
0.75 mm² / 18 AWG	gray	10 mm / 0.39 inch	14	8	3,3	2,8	1,2	**216-202**	1000
1 mm² / 18 AWG	red	8 mm / 0.31 inch	12	6	3,5	3	1,4	**216-223**	1000
1 mm² / 18 AWG	red	10 mm / 0.39 inch	14	8	3,5	3	1,4	**216-203**	1000
1.5 mm² / 16 AWG	black	8 mm / 0.31 inch	12	6	4	3,5	1,7	**216-224**	1000
1.5 mm² / 16 AWG	black	10 mm / 0.39 inch	14	8	4	3,5	1,7	**216-204**	1000
2.08 mm² / 14 AWG	yellow	10 mm / 0.39 inch	15	8	4,8	4,2	2,05	**216-205**	1000
2.5 mm² / 14 AWG	blue	10 mm / 0.39 inch	15	8	4,7	4,2	2,2	**216-206**	1000
4 mm² / 12 AWG	gray	12 mm / 0.47 inch	18	10	5,4	4,8	2,8	**216-207**	500
6 mm² / 10 AWG	yellow	14 mm / 0.55 inch	20	12	6,9	6,3	3,5	**216-208**	100
10 mm² / 8 AWG	red	16 mm / 0.63 inch	22	12	8,4	7,6	4,5	**216-209**	100
16 mm² / 6 AWG	blue	23 mm / 0.91 inch	28	18	9,6	8,8	5,8	**216-210**	100

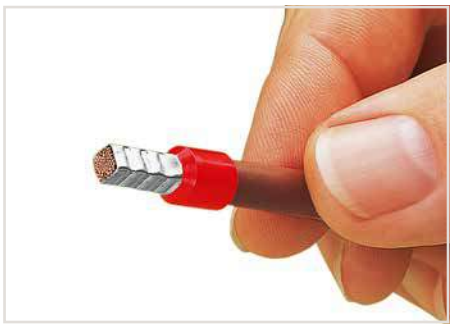

A perfect gas-tight crimp – both electrically and mechanically reliable

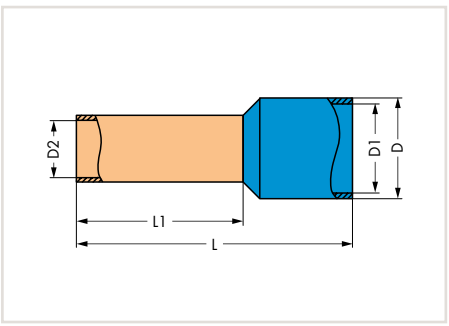

Dimensions in mm

Application notes:

- With "Variocrimp 4," the built-in crimping pressure control automatically adjusts force to the conductor cross section used. With "Variocrimp 16," it is necessary to select the wire gauge on the tool before crimping.
- Only one crimping station is needed to handle the specified conductor size range.
- Uniform compact crimping from all four sides for high conductor retention.
- No need to center the conductor into the ferrule.
- Conductor and ferrule insertion possible from both sides (for left- and right-handers).
- Built-in ratchet mechanism ensures gastight crimp connection.
- Crimping tools open automatically after crimping operation is complete.
- Comfortable handles for operator.



Only for "Variocrimp 16":
Adjust conductor cross-section with crimping tool in open position.

13

Uninsulated Ferrules



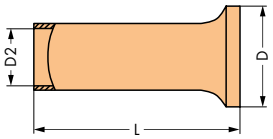

Ferrule, uninsulated, electro-tin-plated, electrolytic copper, gastight crimped, per DIN 46288, Part 4/09.90						
Conductor Size	Strip Length	L	D	D 2	**Item No.**	Pack. Unit
0.25 mm² / 24 AWG	5 mm / 0.2 inch	5	1,7	0,75	**216-151**	1000
0.25 mm² / 24 AWG	7 mm / 0.28 inch	7	1,7	0,75	**216-131**	1000
0.34 mm² / 22 AWG	5 mm / 0.2 inch	5	1,8	0,85	**216-152**	1000
0.34 mm² / 22 AWG	7 mm / 0.28 inch	7	1,8	0,85	**216-132**	1000
0.5 mm² / 20 AWG	6 mm / 0.24 inch	6	2,1	1	**216-121**	1000
0.5 mm² / 20 AWG	8 mm / 0.31 inch	8	2,1	1	**216-101**	1000
0.75 mm² / 18 AWG	6 mm / 0.24 inch	6	2,3	1,2	**216-122**	1000
0.75 mm² / 18 AWG	8 mm / 0.31 inch	8	2,3	1,2	**216-102**	1000
1 mm² / 18 AWG	6 mm / 0.24 inch	6	2,5	1,4	**216-123**	1000
1 mm² / 18 AWG	8 mm / 0.31 inch	8	2,5	1,4	**216-103**	1000
1.5 mm² / 16 AWG	6 mm / 0.24 inch	6	2,8	1,7	**216-124**	1000
1.5 mm² / 16 AWG	8 mm / 0.31 inch	8	2,8	1,7	**216-104**	1000
2.5 mm² / 14 AWG	10 mm / 0.39 inch	10	3,4	2,2	**216-106**	1000
4 mm² / 12 AWG	10 mm / 0.39 inch	10	4	2,8	**216-107**	1000
6 mm² / 10 AWG	12 mm / 0.47 inch	12	4,7	3,5	**216-108**	250
10 mm² / 8 AWG	12 mm / 0.47 inch	12	5,8	4,5	**216-109**	250
16 mm² / 6 AWG	15 mm / 0.59 inch	15	7,5	5,8	**216-110**	250



Only for "Variocrimp 16":
Adjust conductor cross-section with crimping tool in open position.

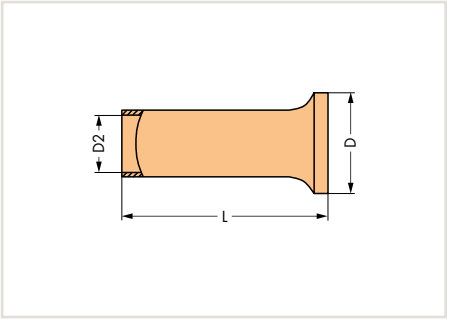

Dimensions in mm

13

Cable Cutter

Cable cutter		



Item No.	Pack. Unit		
Cable cutter, for copper and aluminum cables up to 35 mm² (2 AWG)			
206-118	1		



Cutting a cable.

Crimping Tools

Crimping tool 25 for insulated and uninsulated ferrules crimping range: 10 mm² (8 AWG), 16 mm² (6 AWG) and 25 mm² (4 AWG)	Crimping tool 50 for insulated and uninsulated ferrules crimping range: 35 mm² (2 AWG) and 50 mm² (1/0 AWG)

Application notes:
- Improved crimping for higher conductor retention
- Crimping can be performed from either side (for left- or right-handed users).
- Built-in ratchet mechanism ensures gas-tight crimp connection.
- Crimping tools open automatically after crimping operation is complete.
- Ergonomically designed handles.





Item No.	Pack. Unit	Item No.	Pack. Unit
Crimping tool 25, crimping range: 10 mm² (8 AWG), 16 mm² (6 AWG) and 25 mm² (4 AWG)		Crimping tool 50, crimping range: 35 mm² (2 AWG) and 50 mm² (1/0 AWG)	
206-225	1	**206-250**	1



Insert the ferruled conductor into the crimping station.



Squeeze handles until ratchet mechanism is released.

What is a "gas-tight" connection?
In a gas-tight connection, the conductor and the ferrule are compressed, eliminating all spaces. Under normal atmospheric conditions, neither a liquid nor gaseous medium can penetrate the crimped connection.
Oxidation between crimped single conductors is prevented, virtually eliminating the possibility of any increase in the crimped connection's resistance. In some exceptional cases, minute, isolated spaces may be present. However, these instances can be considered as closed off due to the twisted conductor.
Inadequate crimping can allow the conductor to be pulled out of the connection. Hollow spaces also remain, permitting oxidation formation and leading to an increase in contact resistance.

Elevated resistance is detrimental for both signal transmission (signal flow is damped) and power transmission, resulting in power loss and contact heating (risk of fire).
Crimping tools with built-in ratchets are recommended, such as the WAGO Variocrimp tools. These tools open automatically after the crimping operation is complete. Space-saving crimping from all four sides is ideal for spring clamp termination.
Ferruled conductor cross-sections specified for WAGO products are based on this crimping method.

Uninsulated Ferrules



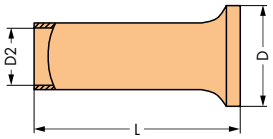

Ferrule, uninsulated, electro-tin-plated, electrolytic copper, gastight crimped, per DIN 46288, Part 4/09.90						
Conductor Size	Strip Length	L	D	D 2	**Item No.**	Pack. Unit
25 mm² / 4 AWG	25 mm / 0.98 inch	25	9,5	7,3	**216-413**	50
35 mm² / 2 AWG	25 mm / 0.98 inch	25	11	8,3	**216-414**	50
35 mm² / 2 AWG	30 mm / 1.18 inch	30	11	8,3	**216-424**	50
50 mm² / 1 AWG	30 mm / 1.18 inch	30	13	10,3	**216-425**	50
50 mm² / 1 AWG	35 mm / 1.38 inch	35	13	10,3	**216-435**	50

Test and Measurement Devices

206 Series

Multi-Tester	Clamp-Multi-Tester	Testboy







Item No.	Pack. Unit	Item No.	Pack. Unit	Item No.	Pack. Unit
Multi-Tester, digital multimeter with non-contact voltage tester		Clamp-Multi-Tester		Testboy, with integrated flashlight, non-contact voltage tester	
206-810	1	**206-816**	1	**206-804**	1



Additional Multi-Tester features:
- Contact-less voltage test AC >100 V (optical and acoustical)
- Resistance measurement up to 20 MΩ
- Acoustical continuity test
- Diode test
- Data hold function
- Auto power-off function
- LED torch lamp function
- CAT IV 600 V
- TÜV/GS tested and approved
- IEC/EN 61010-1 (DIN VDE 0411)



Voltage testing in switchgear cabinet
Additional Clamp-Multi-Tester features:
- DC and AC current up to 600 A
- True RMS and min./max. value measurement
- DC and AC voltage up to 600 V
- Manual or automatic measurement range selection
- Resistance up to 60 MΩ
- Capacitance measurement, acoustical continuity test
- Diode test, data hold function
- Large LCD with backlight
- LED measuring point lighting
- CAT III 600 V overvoltage protection
- IEC/EN 61010-1 (DIN VDE 0411)
- Includes batteries, measurement leads and carrying bag



A device that will reliably detect AC voltage in cables, sockets, fuses, switches, outlets and other installations.
Testboy can detect the following:
- Live conductors
- Cable breaks
- Blown fuses (in cartridges or holders)
- Defective switches
- Defective lamps in strings of lights



Current measurement in a switchgear cabinet

13



Technical Section

Technical Section

		Page
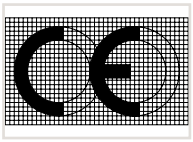	**Technical Information** **CE Marking and EC Directives**	610
	Tests and Testing Procedures Mechanical, Electrical, Material and Environmental Tests	612
	UL Specifications – Underwriters Laboratories, USA Tests and Testing Procedures per UL Standards	632
	**"Alu-Plus" Contact Paste**	637
	Material Specifications Insulation Materials, Contact Plating, Contact Materials and Clamping Spring Material	638
	**General Technical Information on Electrical Equipment Used in Hazardous Areas**	642
	**All terminal blocks used in hazardous areas "Ex e II" have their item numbers marked with the Ex symbol.**	
	**All terminal blocks used in intrinsically safe current circuits "Ex i" have their item numbers marked with a blue circle.**	
	International Certification Organizations – Overview	654
	Electrical Engineering Laboratory **Product Safety for Our Customers**	641

CE Marking and EC Directives

CE Conformity Marking:

The CE conformity marking consists of the characters "CE" with the following script:

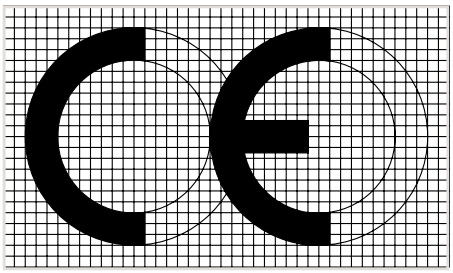

Communauté Européenne
(European Community)

EC directives are legally binding specifications for the European Union. Their goal is aligning legal and administrative specifications in the various EU member countries, in order to prevent trading hindrances arising from different national specifications.

In order to launch a product on the market, it must comply with the relevant directives. Several directives may apply for one single product, for example, EMC and low voltage directives.

For WAGO products the following **EC directives** apply:

2014/35/EU
– Low Voltage Directive (LVD)

The LVD covers all electrical equipment operating with a voltage between 50 and 1000 VAC and between 75 and 1500 VDC.

This directive applies to products, such as rail-mount terminal blocks, splicing connectors, modular terminal blocks, terminal strips, etc., which comply with the specifications of the coordinated
European standards and their specific parts (e.g., EN 60947 for rail-mount terminal blocks and EN 60998 for splicing connectors).

The CE conformity marking must be applied to all electrical equipment; should on-unit marking not be possible, mark the smallest packing unit. With this marking, manufacturers attest conformity of their products to relevant directives.

In addition to the CE marking, manufacturers provide an EC "Declaration of Conformity" for their products. This declaration of conformity must be retained and submitted to a national surveillance authority upon request.

2014/30/EU
– EMC Directive

This directive applies to any devices, equipment and systems containing electric or electronic components. The German Federal Office for Post and Telecommunications (Bundesamt für Post und Telekommunikation, BAPT) is authorized to draw a distinction between
elementary and complex components. Elementary components, such as resistors, transformers, ICs, relays, etc., are not provided with marking. For complex components, such as electro-motors, electronic cards, thermostats, etc., the EMC directives apply only if these components are sold directly to the end user.

All products subject to the application range of the EMC directive must display the CE marking on their housing. This marking proves conformity with the corresponding standards.

2006/42/EC
– Machinery Directive

This directive applies to complete machines or equipment.

The manufacturers of machines or equipment are, however, obliged to use components which meet the corresponding EC directives (e.g., Low Voltage or EMC Directives).
Fulfillment and conformity with these directives is required for the free exchange of goods within Europe.

2014/34/EU
– ATEX Directive

General technical information on electrical equipment used in hazardous areas

IEC/EN Specifications

The following standards apply to the design and application of the terminal blocks and connectors contained in this catalog:

IEC 60364-1
HD 60364-1
VDE 0100-100
/ Erection of power installations with nominal voltages up to 1000 V
- Part 1: Fundamental principles, assessment of general characteristics, definitions

IEC 60364-7-710
HD 60364-7-710
VDE 0100-710
/- Part 7-710: Requirements for special installations or locations
- Medically used areas

IEC 60364-7-718
HC 60364-7-718
VDE 0100-718
/- Part 7-718: Requirements for special installations or locations
- Communal facilities and workplaces

EN 50110-1
VDE 0105-1
/ Operation of electrical installations
- Part 1: General requirements

IEC 60664-1
EN 60664-1
VDE 0110-1
/ Insulation coordination for equipment within low-voltage systems
- Part 1: Principles, requirements and tests

IEC 60204-1
EN 60204-1
VDE 0113-1
/ Safety of machinery – Electrical equipment of machines
- Part 1: General requirements

IEC 61140
EN 61140
VDE 0140-1
/ Protection against electric shock
- Common aspects for installation and equipment

IEC 60079-0
EN 60079-0
VDE 0170-1
/ Harzardous areas
- Part 0: Equipment
- General requirements

IEC 60079-7
EN 60079-7
VDE 0170-6
/ Explosive atmospheres
- Part 7: Equipment protection by increased safety "e"

IEC 60079-11
EN 60079-11
VDE 0170-7
/ Harzardous areas
- Part 11: Equipment protection by intrinsic safety "i"

IEC 60079-14
EN 60079-14
VDE 0165-1
/ Harzardous areas
- Part 14: Electrical installations design, selection and erection

IEC 60079-15
EN 60079-15
VDE 0170-16
/ Explosive atmospheres
- Part 15: Equipment protection by type of protection "n"

VDE 0118-1
/ Installation of electrical equipment in mines
- General rules

IEC 60038
EN 60038
VDE 0175-1
/ IEC CENELEC standard voltages

VDE 0298-4
/ Use of cables and insulated conductors in power installations
- Part 4: Recommended values for current carrying capacities of cables for fixed installation and for flexible cables

IEC 60112
EN 60112
VDE 0303-11
/ Method for determining the comparative and the proof tracking indices of solid insulation materials

IEC 60529
EN 60529
VDE 0470-1
/ Degrees of protection provided by enclosures (IP Code)
- Testing equipment and testing method

IEC 61439-1
EN 61439-1
VDE 0660-600-1
/ Low-voltage switchgear and control-gear assemblies
- Part 1: General rules

IEC 61439-3
EN 61439-3
VDE 0660-600-3
/- Low-voltage switchgear and control-gear assemblies
- Part 3: Distribution boards intended to be operated by ordinary persons (DBO)

IEC 61643-11
EN 61643-11
VDE 0675-6-11
/ Low-voltage surge protective devices
- Part 11: Surge protective devices connected to low-voltage power systems
- Requirements and test methods

IEC 60335-1
EN 60335-1
VDE 0700-1
/ Safety of household and similar electrical appliances
- Part 1: General requirements

IEC 60598-1
EN 60598-1
VDE 0711-1
/ Lighting fixtures
- Part 1: General requirements and tests

IEC 60715
EN 60715
/ Standardized mounting on rails for mechanical support of electrical devices in switchgear and control-gear installations

IEC 60999-1
EN 60999-1
VDE 0609-1
/ Connecting devices – Electrical copper conductors – Safety requirements for screw-type and screwless-type clamping units
- Part 1: General requirements and particular requirements for clamping units for conductors from 0.2 mm² up to 35 mm²

IEC 60999-2
EN 60999-2
VDE 0609-101
/- Part 2: General requirements and particular requirements for clamping units for conductors from 35 mm² up to 300 mm² (included)

IEC 60998-1
EN 60998-1
VDE 0613-1
/ Connecting devices for low-voltage circuits for household and similar purposes
- Part 1: General requirements

IEC 60998-2-1
EN 60998-2-1
VDE 0613-2-1
/- Part 2-1: Particular requirements for connecting devices as separate entities with screw-type clamping units

IEC 60998-2-2
EN 60998-2-2
VDE 0613-2-2
´/- Part 2–2: Particular requirements for connecting devices as separate entities with screwless-type clamping units

IEC 60998-2-3
EN 60998-2-3
VDE 0613-2-3
/- Part 2-3: Particular requirements for connecting devices as separate entities with insulation-piercing clamping units

IEC 60947-1
EN 60947-1
VDE 0660-100
/ Low-voltage switchgear and controlgear
- Part 1: General rules

IEC 60947-7-1
EN 60947-7-1
VDE 0611-1
- Part 7-1: Ancillary equipment
- Terminal blocks for copper conductors

IEC 60947-7-2
EN 60947-7-2
VDE 0611-3
/- Part 7-2: Ancillary equipment
- Ground conductor terminal blocks for copper conductors

IEC 60947-7-3
EN 60947-7-3
VDE 0611-6
- Part 7-3: Ancillary equipment
- Safety requirements for fuse terminal blocks

VDE 0611-4
/ Rail-mount terminal blocks for connection of copper conductors;
- Multi-level distribution rail-mount terminal blocks up to 6 mm²

IEC 61984
EN 61984
VDE 0627
/ Connectors – Safety requirements and tests

Tests and Testing Procedures per IEC/EN Standards

Products such as connecting devices, rail-mount terminal blocks and connectors, etc., have their own product-specific test specifications. The following sections describe the most important tests and are limited to a description of the test procedures and an explanation of the test purpose. The data shown (e.g., voltages, temperatures, forces) only serve as illustration and may differ depending on the test.

Mechanical Tests

All WAGO products meet requirements for the following mechanical tests:

• Termination Requirements

Conductor Termination

Two WAGO connection systems are proven in the field of Spring Pressure Connection Technology:

The **PUSH WIRE® connection** for applications requiring solid conductors (e.g., for lighting and building wiring, telecommunications, house communication or alarm systems).

Conductor range:
0.2 ... 4 mm² (24 ... 12 AWG)

The **universal CAGE CLAMP® spring pressure connection system** for solid, stranded and fine-stranded conductors, designed for a variety of industrial, electrical and electronic applications (e.g., fine-stranded conductors in the elevator industry, in power stations, in the chemical and automotive industry, and aboard ships).

Conductor range:
0.08 ... 35 mm² (28 ... 2 AWG)

The **Push-in CAGE CLAMP® connection** takes universal CAGE CLAMP® connections further by allowing the termination of 0.2 ... 16 mm² (24 ... 6 AWG) solid, stranded and fine-stranded conductors (25 mm²/4 AWG only "f-st") and offering all the benefits and safety of the original CAGE CLAMP®. Furthermore, the Push-in CAGE CLAMP® connection technology allows solid, stranded and fine-stranded conductors with ferrules from 0.5 ... 16 mm² (20 ... 6 AWG) to be terminated by simply pushing them in.

The conductor entry hole is perfectly suited for the insulation diameter of the rated conductor cross-section, thus providing good conductor guidance.

This is particularly important for vibration-prone applications.

Fine-stranded conductors of small or very small size are highly flexible, and deform when pushed against the conductor stop in terminal blocks. As a result, the conductor insulation – not the copper conductor – may be clamped, causing intermittent contact or no contact at all.

In order to prevent conductor insulation from being inserted into the clamp, insulation stops are available for WAGO rail-mount terminal blocks up to 4 mm² (12 AWG), even providing protection for 0.08 mm² (28 AWG) conductors (see Section 5).

Rated Cross-Sections and Connectable Conductors

I. Per IEC 60999-1 / EN 60999-1 / VDE 0609-1, Table 1:

Rated Cross-Section	Theoretical Largest Conductor Diameter							Connectable Conductor	
	Metric			AWG					
	Rigid		Flexible	Rigid			Flexible	Rigid	Flexible
	Solid	Stranded			[b] Solid	[b] Class B Stranded	[c] Class I, K, M Stranded	To be defined in the corresponding product standard	
mm²	mm	mm	mm	Cond. Cross-Section	mm	mm	mm		
0.2	0.51	0.53	0.61	24	0.54	0.61	0.64		
0.34	0.63	0.66	0.8	22	0.68	0.71	0.8		
0.5	0.9	1.1	1.1	20	0.85	0.97	1.02		
0.75	1	1.2	1.3	18	1.07	1.23	1.28		
1	1.2	1.4	1.5	–	–	–	–		
1.5	1.5	1.7	1.8	16	1.35	1.55	1.6		
2.5	1.9	2.2	2.3[a]	14	1.71	1.95	2.08		
4	2.4	2.7	2.9[a]	12	2.15	2.45	2.7		
6	2.9	3.3	3.9[a]	10	2.72	3.09	3.36		
10	3.7	4.2	5.1	8	3.34	3.89	4.32		
16	4.6	5.3	6.3	6	4.32	4.91	5.73		
25	–	6.6	7.8	4	5.45	6.18	7.26		
35	–	7.9	9.2	2	6.87	7.78	9.02		

NOTE: The diameters of the largest rigid and flexible conductors are based on Table 1 of IEC 60228 A/IEC 60344 and on ASTM B172-71 [4], IECA Publication S-19-81 [5], IECA Publication S-66-524 [6], as well as IECA Publication S-66-516 [7] for AWG conductors.
a) Dimensions for Class 5 flexible conductors only (IEC 60228 A)
b) Nominal diameter + 5 %
c) Largest diameter for conductors of classes I, K, M + 5 %
In practical use, the conductor cross-sections are approximately 5 % below the values stated in the table!

The IEC 60999-1/EN 60999-1/ VDE 0609-1 Specification (Section 7.1) requires that:

Clamping units must be able to connect unprepared conductors.

Under normal operating conditions, direct clamping (i.e., directly connecting a conductor to the terminal block's current bar) provides optimal contact quality, because all risk factors arising from anti-splaying methods are prevented.

Occasionally, conductor anti-splaying protection may be required, including various methods (see illustrations below).

Special requirements apply only in special application areas exposed to extremely corrosive atmospheres.

In this case, we recommend using either solid copper conductors or fine-stranded copper conductors with properly crimped, tin-coated copper ferrules or copper pin terminals.

II. Per IEC 60999-2, Table 1:

Rated Cross-Section	Theoretical Largest Conductor Diameter					Connectable Conductor	
	Metric		AWG/kcmil				
	Rigid Stranded	Fine-Stranded a)	Gauge	Rigid Stranded	Fine-Stranded		
mm^2	mm	mm		mm	mm	Rigid	Flexible
50	9.1	11	1/0	9.64	12.08	To be defined in the corresponding product standard	
70	11	13.1	2/0	11.17	13.54		
95	12.9	15.1	3/0	12.54	15.33		
–	–	–	4/0	14.08	17.22		
120	14.5	17	250	15.34	19.01		
150	16.2	19	300	16.8	20.48		
185	18	21	350	18.16	22.05		
–	–	–	400	19.42	24.05		
240	20.6	24	500	21.68	26.57		
300	23.1	27	600	23.82	30.03		
a) Dimensions for Class 5 flexible conductors only (IEC 60228 A)							
NOTE: The diameters of the largest rigid and flexible conductors are based on Table 1 and Table 3 of IEC 3 A/IEC 60228 and on ASTM B172-71 [1], IECA Publication S-19-81 [2], IECA Publication S-66-524 [3], as well as IECA Publication S-66-516 [7] for AWG conductors.							



Tip-bonded conductor



Tin-plated copper ferrule (gas-tight crimped)



Ultrasonically bonded conductor

Anti-splaying methods require a terminal block one size larger than the nominal cross-section of the conductor to be terminated.
Ferruled conductor cross-sections specified for individual products are based on WAGO's Variocrimp square crimping technology.
Gas-tight, crimped twin ferrules may be used, provided the ferrule is inserted all the way into the clamping unit and that there is a sufficient clearance and creepage distance between adjacent potentials.



Crimped pin terminal (gas-tight), preferably made of copper with a tin-plated surface

As with solid copper conductors, the fine strands are crimped to a dense inner core. This prevents ingress of aggressive atmospheres (depending on the ppm concentration), which can diffuse into the conductor bundle along the individual strands and cause corrosion deposits between individual strands and the clamping point.

One Conductor per Clamping Unit

A number of VDE specifications specify that **only one conductor must be connected per clamping unit** (e.g., DIN VDE 0611-4, 02.91, Section 3.1.9). The same applies to the recommendations of the German Automotive Industry Association (VDA) "Supply specification for the electrical equipment of machines, mechanical installations and buildings in the automotive industry" according to Section 15.1.1.3; Draft 8.93.
Other VDE and EN specifications also recommend the connection of **only one conductor per clamping unit**, unless the clamping unit is specifically tested and approved for the connection of several conductors, for example:
VDE 0609-1, 12.00/
EN 60999-1:2000, Section 7.1
VDE 0660-600, 06.12/
EN 61439-1:2011
Section 8.6.3
VDE 0113-1, 06.07/
EN 60204-1:2006, Section 13.1.1
One conductor per clamping unit is therefore recommended to meet the safety requirements of these relevant specifications. This WAGO principle is the basis for a number of other technical and economic advantages:

- Each conductor may be terminated or removed without affecting previously connected conductors.
- Where re-wiring is required, only the conductor to be changed is removed from the clamping point, all other conductors remain safely clamped.
- Each conductor is clamped independently.
- Any conductor size combination can be connected.

WAGO rail-mount terminal blocks offer different solutions to increase the number of clamping points.
The most common way is by branching one conductor into two or three conductors. WAGO offers 3- and 4-conductor terminal blocks, making additional jumpers unnecessary.

Tests and Testing Procedures per IEC/EN Standards (continued)

Mechanical Tests (continued)

• Pull-Out Test per IEC/EN 60947-7-1, IEC/EN 60998-2-2, IEC/EN 60999-1

The pull-out test simulates the mechanical stress on the clamping unit when, for example, the installer pushes the conductor aside to better access/operate the adjacent clamping unit, or verifies if the conductor is connected properly by briefly pulling on it.
During the test, a pulling force is applied without jerking, for one minute, to the connected conductor. The pulling force is selected according to the cross-sectional area. The larger the cross-section of the conductor, the higher the pull-out force that is selected. For example, the pulling force is 40 N for a conductor having a cross-section of 1.5 mm² (16 AWG) and 100 N for a conductor with a cross-section of 16 mm² (6 AWG). The values specified by these standards are the same for both screw clamp and spring clamp terminal blocks. During the test, the conductor must neither slip out of the clamping unit, nor break near the clamping unit.

Conductor Pull-Out Forces

The clamping units of screwless terminal blocks must withstand the pull-out forces as follows:
IEC 60947-1/EN 60947-1/VDE 0660-100, Table 5:
Low-voltage switchgear and controlgear, general rules

IEC 60947-7-1/EN 60947-7-1/ VDE 0611-1, rail-mount terminal blocks for copper conductors

IEC 60998-2-1/EN 60998-2-1/ VDE 0613-2-1, Table 104:
IEC 60998-2-2/ EN 60998-2-2 VDE 0613-2-2, Table 103:
Connecting devices for low-voltage circuits for household and similar purposes
Particular requirements for connecting devices as separate entities with screw-clamp or screwless terminal blocks.
IEC 60999-1/EN 60999-1/VDE 0609-1, Table 3:
IEC 60999-2/EN 60999-2/VDE 0609-101, Table 2:
Safety requirements for screw-clamp and screwless clamping units for electrical copper conductors

Rated Cross-Section		Pull-Out Forces per IEC/EN		
		60947-7-1	60998-2-2	60999-1/-2
mm²	AWG/kcmil	N	N	N
0.2 0.34	24 22	10 15	10 15	10 15
0.5 0.75	20 18	20 30	20 30	20 30
1 1.5	– 16	35 40	35 40	35 40
2.5 4	14 12	50 60	50 60	50 60
6 10	10 8	80 90	80 90	80 90
16 25	6 4	100 135	100 135	100 135
– 35	3 2	156 190	190	190
– 50	1 1/0	236 236		236
70 95	2/0 3/0	285 351		285 351
– 120	4/0 250	427 427		427 427
150 185	300 350	427 503		427 503
– 240	400 500	503 578		503 578
300	600	578		578

• Shock Test per IEC/EN 60068-2-27; IEC/EN 61373 (Railway Applications)

The shock test is similar to the vibration test except that, instead of continuous vibrations, single shocks are applied to the specimen. Shock tests are usually performed with an acceleration of 20g, for example, over a period of 11 ms. Tests for special requirements often call for much higher values.
Like the vibration tests, shock tests are primarily used to test the voltage drop variation or contact breaks, etc.

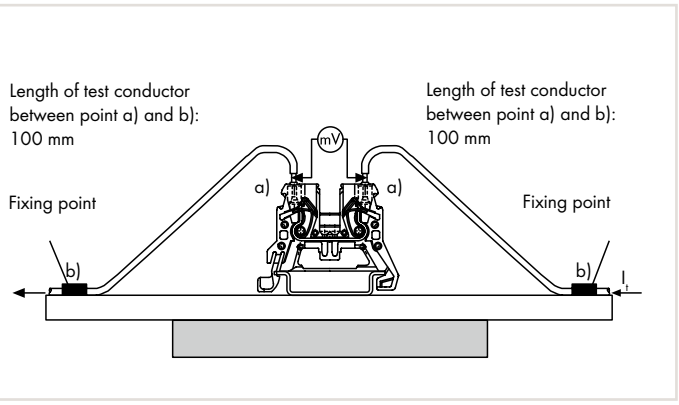

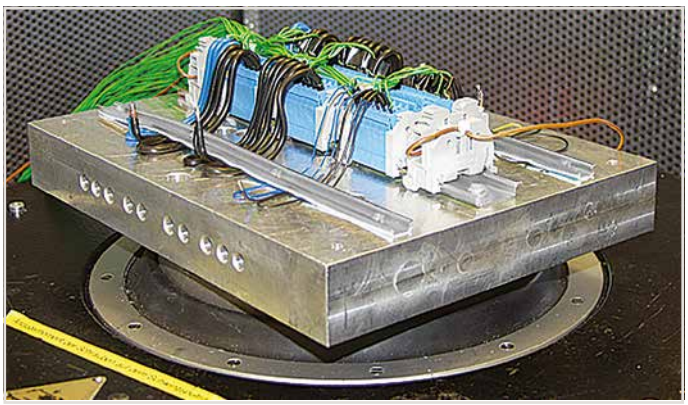

Example:

Per IEC/EN 60068-2-27
(half-sine shock)
Acceleration: 100g Duration: 6 ms Shock direction: Three axes
(three shocks each in positive and negative direction)

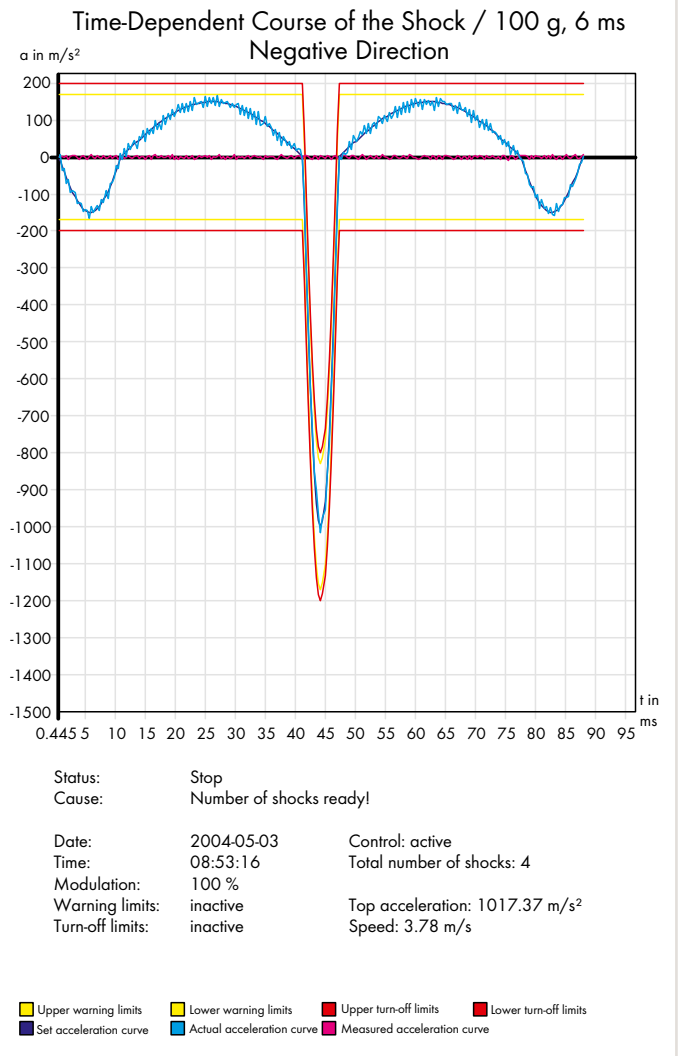

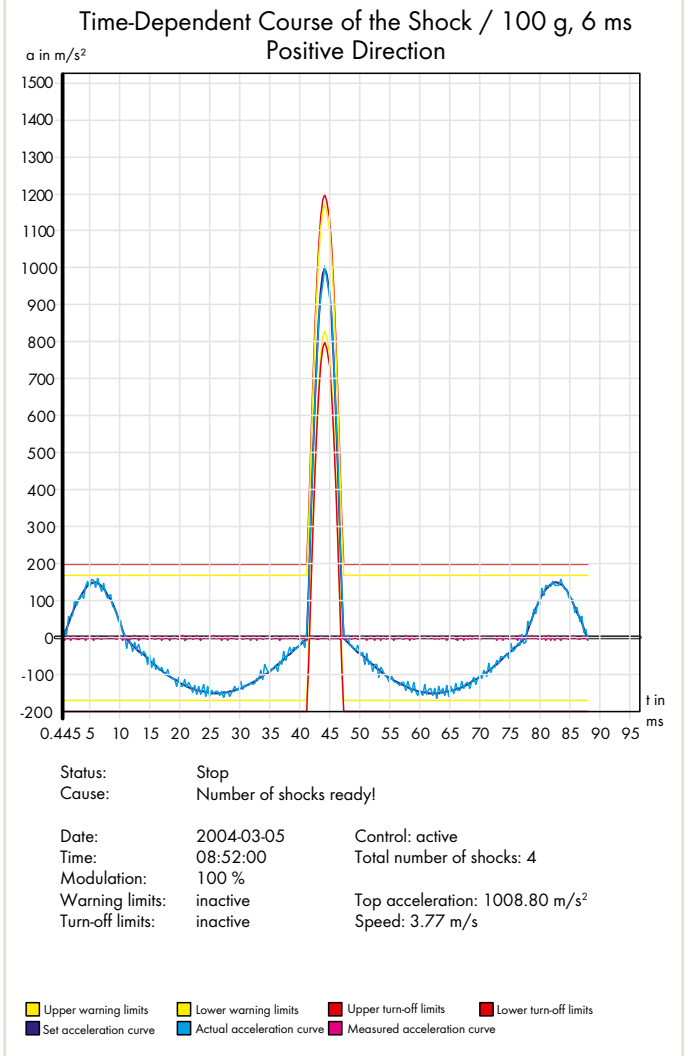

Tests and Testing Procedures per IEC/EN Standards (continued)

Mechanical Tests (continued)

• Vibration Test per IEC/EN 60068-2-6; DNV GL, LR (Marine Applications); EN 61373 (Railway Applications)

The vibration test determines whether vibrations, such as those produced in the vicinity of machines or in vehicles, will permanently affect the electrical connection, or if contact breaks will occur during vibrations. Using a vibration table, the test specimen is subjected to vibration in each of the X, Y and Z axes (see pictures).
The amplitude, acceleration and in particular the frequency of the vibration must vary during the test.

In a common test procedure, for example, a wide frequency band is continuously run up to 2000 Hz, at different accelerations up to 20g and different amplitudes up to 20 mm. Test duration is 90 minutes per axis.



Other test types are performed using a single fixed frequency. The exact test procedure may vary considerably, depending on how the product will be used. Some test specifications require the determination of possible resonant frequencies, i.e., determining if resonance occurs within the frequency spectrum to be passed through. Analyzing the specimen behavior under the influence of resonant frequencies is performed using a special testing procedure.

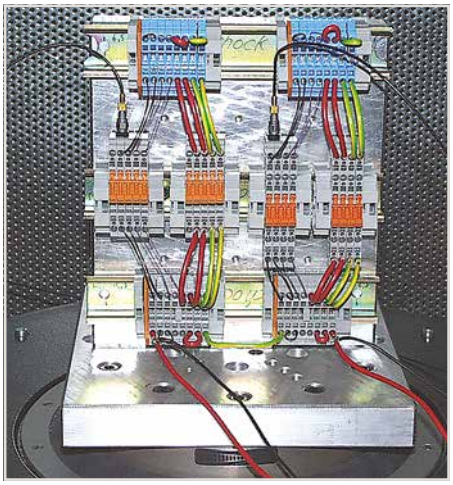

Beyond these standard procedures, each market segment performs additional testing. Examples include railway authorities testing rolling electrical equipment, or the testing performed multiple marine agencies (e.g., DNV GL Group, Lloyd's Register of Shipping). Though the requirements of such testing procedures are particularly demanding, test arrangements are identical for all of them. During vibrations, possible contact breaks are monitored on an oscilloscope. Voltage drop is measured before and after the test to detect permanent failures, i.e., checking if electrical resistance at the clamping unit has not increased beyond the permissible limit. The smaller this value is, the smaller the contact resistance of the clamping unit.

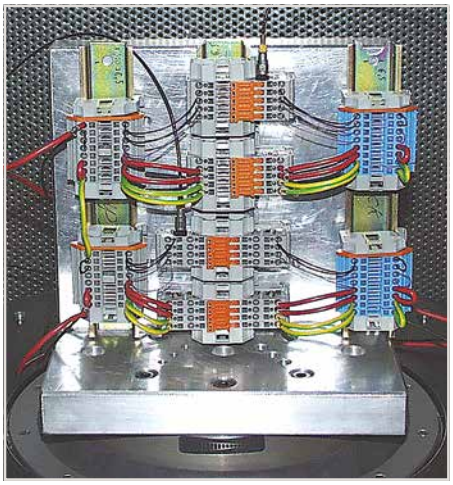

The test is passed if:

- the conductor has neither slipped out of the terminal block nor been damaged,
- the maximum permissible voltage drop has not been exceeded
- and neither contact breaks have occurred nor a defined break time has been exceeded.

The test specimen must not be damaged in any way that might affect future use.

Since their inception, both CAGE CLAMP® and Push-in CAGE CLAMP® connections have been routinely tested for their resistance to vibration in connection with approval tests.

Additionally, WAGO conducts special self-resonance behavior tests on clamping systems, using different terminal block and conductor arrangements.
In these tests, a wide frequency band is continuously run up to 2,000 Hz, at different accelerations up to 20g and different amplitudes up to 20 mm. The figure provides an example of a self-resonance vibration test configuration.

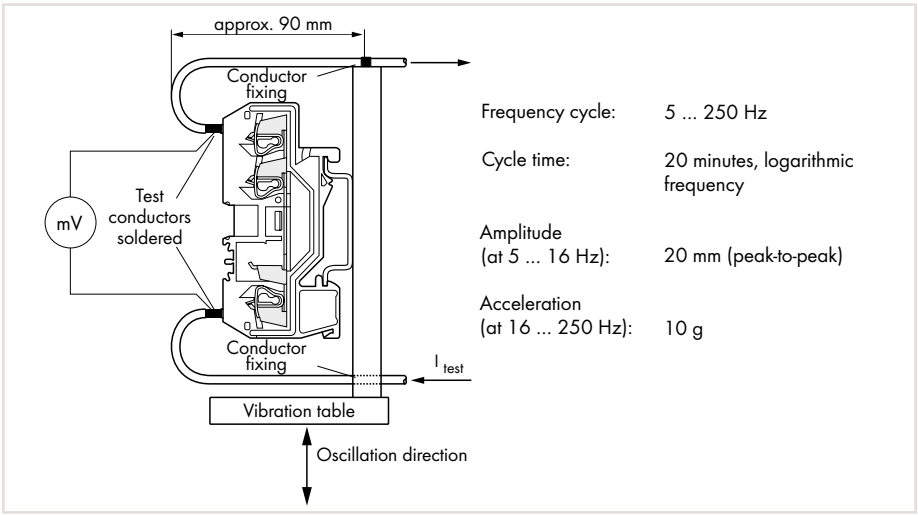

Self-resonance vibration test set-up

All WAGO spring clamp connections meet these test requirements.

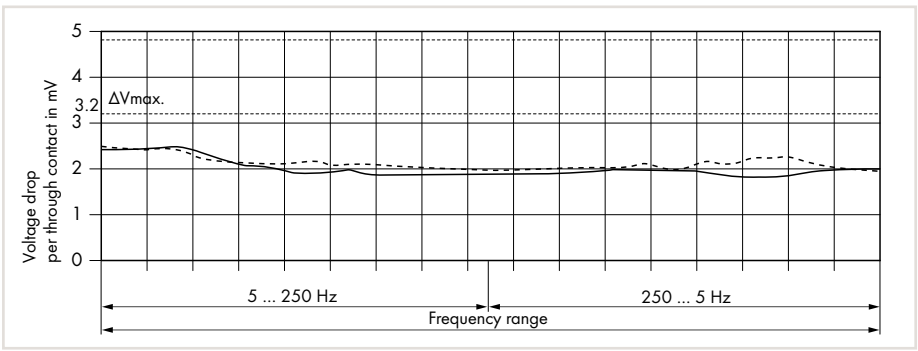

Frequency cycle

Rail-mount terminal block: Item no. 280-681
Test current: 1/10 I_N = 2.4 A

——— Test specimen no. 1
- - - - - - - - - Test specimen no. 2

Tests and Testing Procedures per IEC/EN Standards (continued)

Electrical Tests

All WAGO products meet requirements for the following electrical tests:

• Temperature-Rise Test per IEC/EN 60947-7-1

The temperature-rise test examines the clamping unit – including the surrounding insulation – at rated current, over-current and short-circuit current levels.
Unless otherwise specified in the related equipment specification, e.g., by specifying the nominal currents of the equipment, terminal blocks and connectors are tested with current loads as specified in the respective construction specification.
For rail-mount terminal blocks complying with IEC 60947-7-1/EN 60947-7-1/VDE 0611-1, or terminal blocks complying with IEC 60998-1/EN 60998-1/ VDE 0613-1, the temperature rise must not exceed 45 Kelvin.

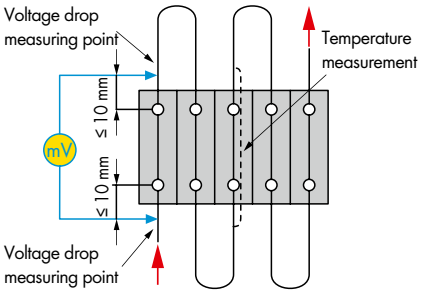

Test arrangement: "Temperature-Rise Test"

Rated Cross-Section	Test Current per IEC/EN	
	60947-7-1 Table 4	60998-1 Table 2
mm²	A	A
0.2 0.34	4 5	4 5
0.5 0.75	6 9	6 9
1 1.5	13.5 17.5	13.5 17.5
2.5 4	24 32	24 32
6 10	41 57	41 57
16 25	76 101	76 101
35 –	125	125
50 70	150 192	
95 –	232	
120 150	269 309	
185 240	353 415	
300	520	

Conductor Size	Test Current per IEC/EN
	60947-7-1 Table 5
AWG/kcmil	A
24 22	4 6
20 18	8 10
– 16	 16
14 12	22 29
10 8	38 50
6 4	67 90
2 1	121 139
1/0 2/0	162 185
3/0 4/0	217 242
250 kcmil 300 kcmil	271 309
350 kcmil 500 kcmil	353 415
600 kcmil	520

• Current-Carrying Capacity Curve per IEC/EN 60512-5-2

Both the design requirements (e.g., dimensions) and the current-carrying capacity of a connector must be checked by the user when selecting connectors.
This data depends on the following factors: connected conductor cross-section, ambient temperature, number of simultaneously loaded poles, connector's internal resistance, as well as PCB layout and connector materials if required. In accordance with IEC/EN 60512-5-2, the relationship between current, ambient temperature and temperature rise up to the connector's upper temperature limit is illustrated via current-carrying capacity curve. The connector must only be operated up to this temperature limit (sum of the self-generated heat and the ambient temperature) without being damaged or destroyed during operation.

Functioning of a current-carrying capacity curve per EN 60512-5-2 is shown by an application using a current-carrying capacity curve for the X-COM®-SYSTEM:
This application requires each pole of a 4-pole connector be subjected to a load of 32 A. Based on the basic curve determined for this pole number with a conductor cross-section of 4 mm², it has been determined the maximum ambient temperature is 42 °C (107.6 °F). The current must be reduced at higher ambient temperatures, e.g., to 19 A at an ambient temperature of 70 °C (158 °F).

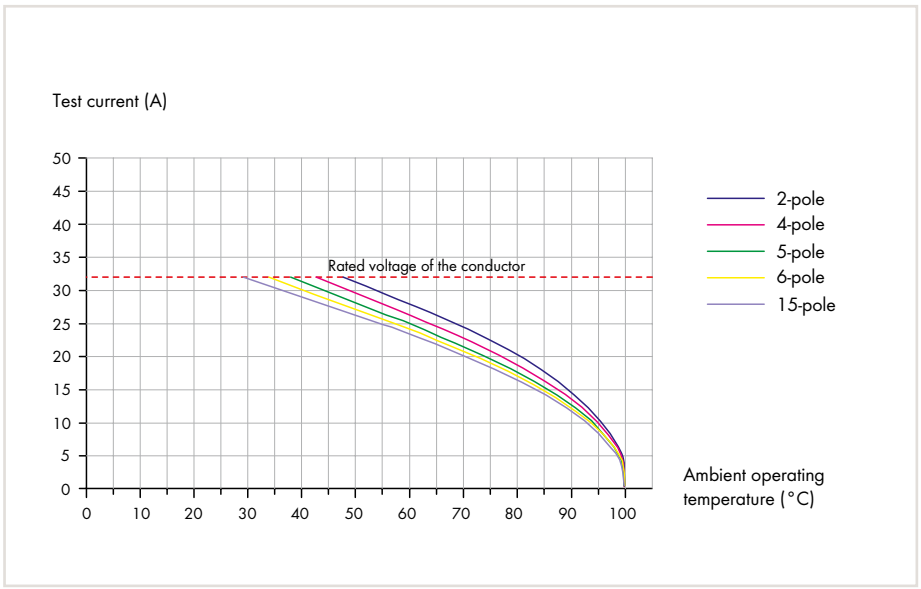



1-conductor/1-pin carrier terminal block (769-176)
Conductor cross-section: 4 mm² (12 AWG)

1-conductor female plugs (769-102 to 769-115)
Conductor cross-section: 4 mm² (12 AWG)
Conductor loop length: 1 m

Tests and Testing Procedures per IEC/EN Standards (continued)

Electrical Tests (continued)

• Voltage Drop Test per IEC/EN 60947-7-1

The voltage drop test evaluates clamping point quality under stress such as vibration, temperature change, industrial climate and salt spray, in order to verify that the contact point is gas-tight.

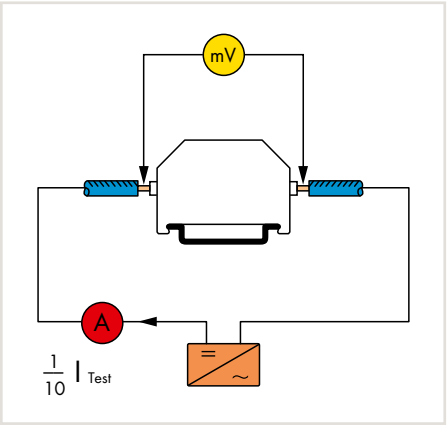

Test arrangement: "Voltage Drop Test"

The CAGE CLAMP® and Push-in CAGE CLAMP® connections enclose and contain fine-stranded conductors. Therefore, a variation of the voltage drop with solid and fine-stranded conductors is so small that its influence may be negligible for the practical application of the terminal blocks.

Typical voltage drop variations for solid and fine-stranded conductors of 280 to 285 Series CAGE CLAMP® Rail-Mount terminal Blocks:

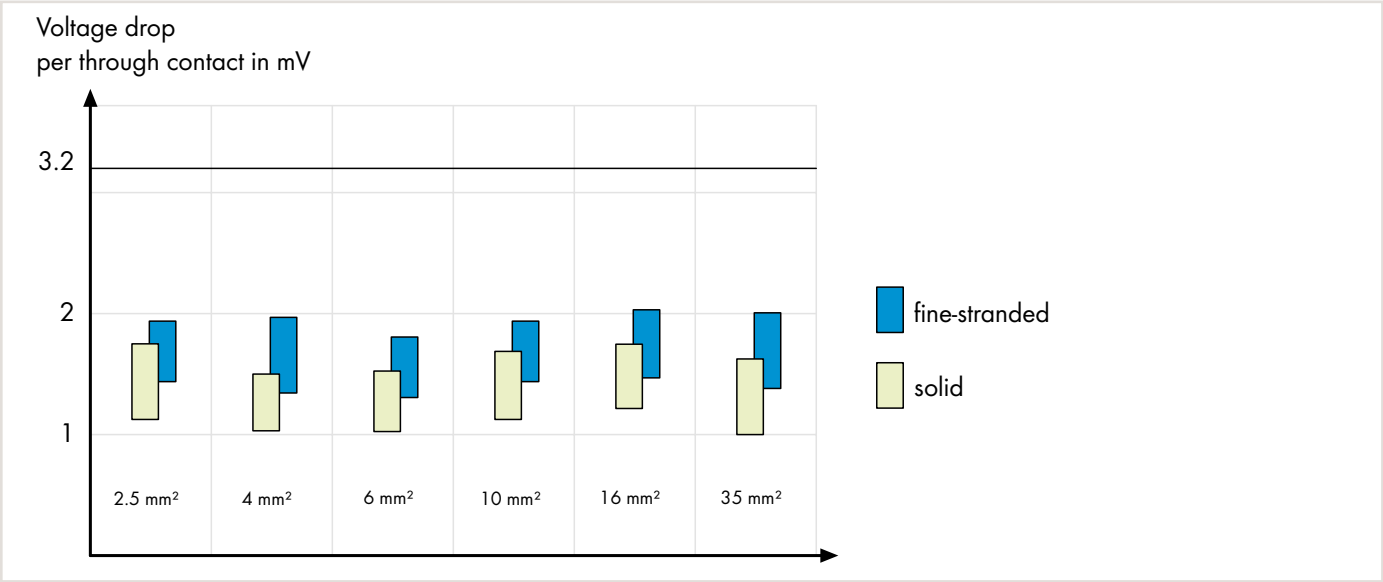

Example: Current load cycling test result for rail-mount terminal blocks (item no. 285-195) using 95 mm² (4/0 AWG) fine-stranded copper conductors:

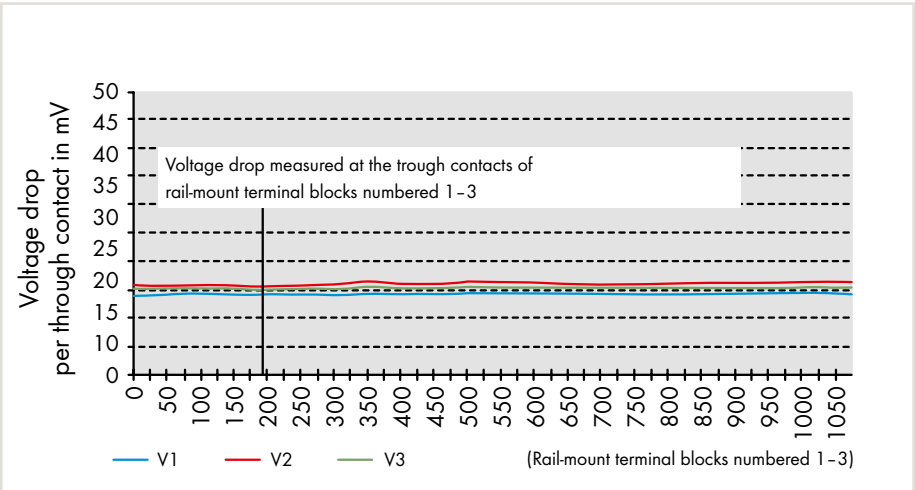

Voltage drop variation over longer periods under current load cycling conditions is shown for WAGO 285-195 (95 mm²/4/0 AWG) Rail-Mount Terminal Blocks

using solid copper conductors. The diagram shows that the voltage drop is constant, far beyond the 192 cycles required in IEC 60947-7-1.

(The voltage drop was determined at rated current.)

• Short-Time Withstand Current Test (Short-Circuit Withstand Capacity) per IEC/EN 60947-7-1

Apart from the rated current that can be constantly applied to an electrical device, operation-related short peak currents consistently occur in electrical installations; e.g., when motors are started. Also, in the event of a short circuit, a high current can flow for a short time until the fuse element melts. Terminal blocks and connecting devices must be able to withstand such conditions. For example, in the short-time withstand current test per IEC/EN 60947-7-1, a through rail-mount terminal blocks must be capable of withstanding for one second the rated short-time withstand current which corresponds to 120 A/mm² of its nominal cross-section.

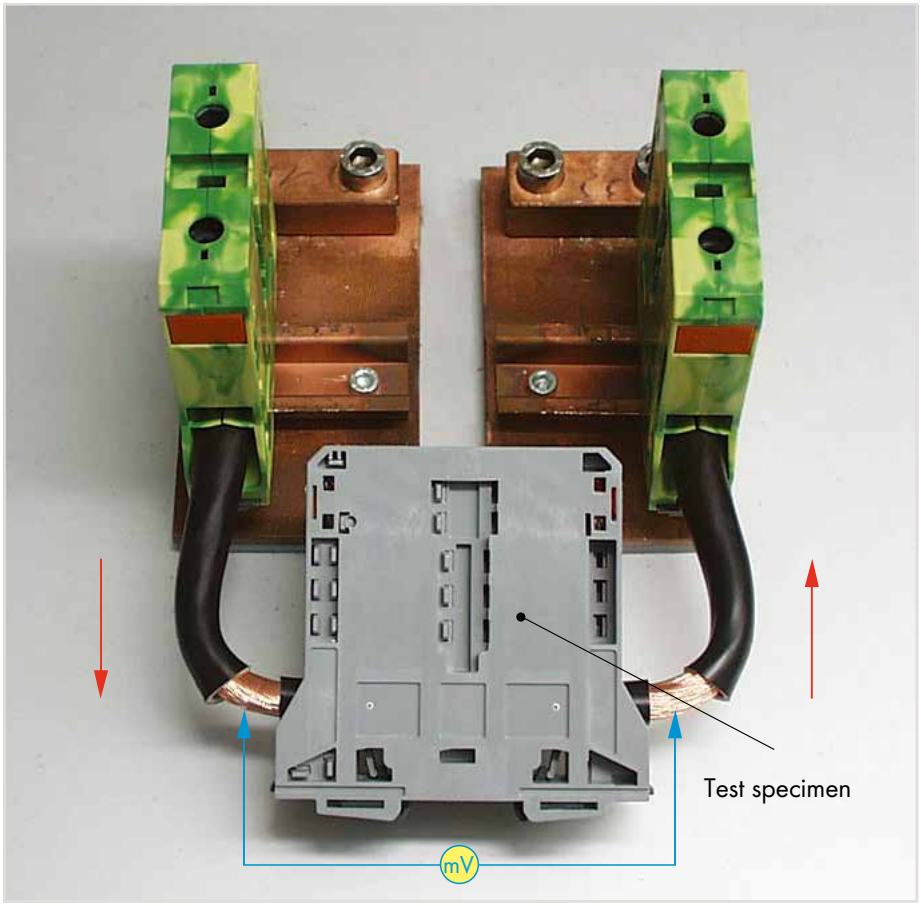

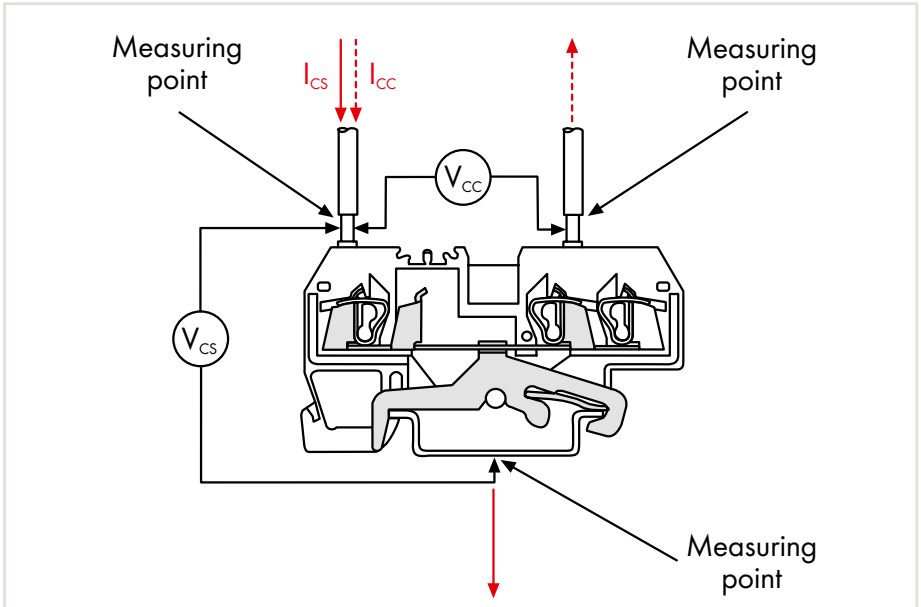

During the short-time withstand current test, the ground conductor rail-mount terminal blocks are subjected three times for one second each to a current load of 120 A/mm². The pass criterion for the test is the voltage drop (limiting value and constant measured values).

Tests and Testing Procedures per IEC/EN Standards (continued)

Electrical Tests (continued)

• Insulation Parameters per IEC/EN 60664-1

Clearances and Creepage Distances

The following generally applies:
The equipment specification contains data for the measurement of clearances and creepage distances, or refers to the data contained in the basic DIN EN 60664-1/VDE 0110-1 standard. This standard contains new clearances and creepage distances in compliance with insulation coordination requirements. That is, the insulation parameters of equipment are assigned to:

- the anticipated surge voltages,
- the parameters of the protection device against impulse voltage and
- the anticipated environmental conditions and the protection measures against pollution.

This standard is based on IEC 60604-1.

Overvoltage Categories for Electrical Equipment

A specific overvoltage category must be defined on the basis of the following, general description:

- Equipment in **overvoltage category I** is intended to be connected to the fixed electrical installations of buildings. Protective means are taken outside the equipment – either in the fixed installation or between the fixed installation and the equipment – to limit transient overvoltages to the specific level.
- Equipment in **overvoltage category II** is to be connected to the fixed electrical installations of buildings.
  Note: Examples of such equipment are household appliances, portable tools and similar loads.
- Equipment in **overvoltage category III** is part of the fixed electrical installations and other equipment where a higher degree of availability is expected.
  Note: Examples of such equipment are distribution boards, circuit breakers, wiring systems (IEV 826-16-08, including cables, bus bars, junction boxes, switches, socket outlets) in the fixed installation and equipment for industrial use and other equipment, e.g., stationary motors with permanent connection to the fixed installation.
- Equipment in **overvoltage category IV** is for use in or near the feed-in in electrical building installations upstream of the main distribution board in the direction of the network.
  Note: Examples include electricity meters, primary overcurrent protection devices and ripple control units.

Clearances, Rated Surge Voltages, Overvoltage Categories, Pollution Degrees

Surge voltages (Table 1) are a decisive factor in determining clearances.

The basis forms the **overvoltage category**, i.e., the allocation of the equipment to the expected overvoltage, and the **conductor-ground voltage** derived from the nominal mains voltage in installations with a grounded Y (star) point.

In ungrounded installations, or installations where the conductor is not grounded, the voltage between conductors is applicable in the same way as conductor voltage to ground.

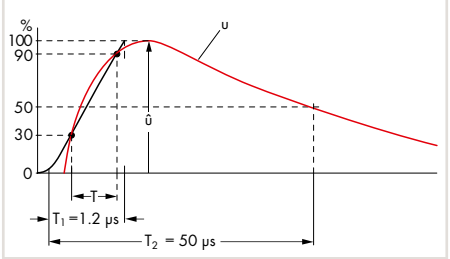

Voltage pulse: 1.2/50 µs per EN 60060-1/VDE 0432-1

The rated surge voltage must be selected from Table F.1 corresponding to the overvoltage category specified and to the rated voltage of the equipment.
Table F.1: Rated surge voltage for equipment energized directly from the low-voltage mains (DIN EN 60664-1/VDE 0110-1)
Voltage curve: 1.2/50 µs per IEC 60060-1/VDE 0432-1

Nominal voltage of the power supply system[1] (mains) per IEC 60038[3]		Conductor-to-neutral voltage, derived from the nominal AC or DC voltage up to and including:	Rated surge voltage[2] Overvoltage category[4]			
Three-phase V	Single-phase V	V	I V	II V	III V	IV V
		50	330	500	800	1500
		100	500	800	1500	2500
	120-240	150[5]	800	1500	2500	4000
230 / 400 277 / 480		300	1500	2500	4000	6000
400 690		600	2500	4000	6000	8000
1000		1000	4000	6000	8000	12000

[1] See Annex B for application to existing different low-voltage mains and their nominal voltages.
[2] Equipment with these rated impulse voltage levels can be used in installations complying with IEC 60364-4-443.
[3] The / mark indicates a three-phase, 4-conductor system. The lower value is the conductor-to-neutral voltage, while the higher value is the conductor-to-conductor voltage. Where only one value is indicated, it refers to three-phase, 3-conductor systems and specifies the conductor-to-conductor voltage.
[4] See 4.3.3.2.2 for an explanation of the overvoltage categories.
[5] The nominal voltages for single-phase systems in Japan are 100 V or 100 ... 200 V. The value for the rated impulse voltage is, however, derived from the voltage gaps conductor-to-neutral for a voltage level of 150 V (see Annex B).

The nominal supply voltage and the corresponding rated impulse voltage values apply for grounded and ungrounded circuits.

Pollution Degrees

Pollution factors are all solid, liquid or gaseous foreign matter which may reduce the dielectric strength or the specific surface resistance. Factors are divided into four classes based on expected environmental conditions:

		Examples of pollution degrees for assigned areas:
Pollution degree 1:	No pollution, or only dry, non-conductive pollution occurs. Pollution has no influence.	Open, unprotected insulated equipment in air-conditioned or clean, dry rooms
Pollution degree 2:	Only non-conductive pollution occurs. Occasional, temporary conductivity caused by condensation can also be expected.	Open, unprotected insulated equipment in occupied areas, shops, laboratories, mechanical workshops and medical rooms.
Pollution degree 3:	Conductive pollution occurs, or dry, non-conductive pollution occurs which will become conductive due to condensation.	Open, unprotected insulated equipment in industrial, business and farming areas (e.g., unheated rooms, workshops and boiler rooms)
Pollution degree 4:	The pollution generates persistent conductivity caused by conductive dust, rain or wet conditions.	Open, unprotected insulated equipment for outdoor use

Dimensioning Clearances

(DIN EN 60664-1/VDE 0110-1, Table F.2)
Select the minimum clearances in accordance with the rated surge voltages and pollution degrees. To maximize the operating life of the equipment, do not go below these minimum clearances.
Table F.2 contains a list of information for Case A, the inhomogeneous field and for Case B, the homogeneous field.
This involves an electric field with essentially constant (Case B) or non-constant (Case A) voltage gradients between the electrodes.
Equipment with a clearance that is dimensioned per Case A, in other words rated for the most unfavorable case, requires no verification by the impulse voltage test.
Equipment with a clearance that is dimensioned per Case B, or between A and B, requires verification by the impulse voltage test.

The clearances shown in Table F.2 are applicable for an installation height of up to 2000 m above sea level.

Values for clearances above 2000 m must be multiplied by a high correction factor in accordance with Table A.2.

Table F.2: Clearances to Withstand Transient Overvoltages

DIN EN 60664-1/VDE 0110-1

Required impulse withstand voltage[1)5)]	Minimum clearances in air up to 2000 m above sea level					
	Case A (inhomogeneous field, see 3.15)			Case B (homogeneous field, see 3.14)		
	Pollution degree[6]			Pollution degree[6]		
	1	2	3	1	2	3
kV	mm	mm	mm	mm	mm	mm
0.33[2)]	0.01	0.2[3)4)]	0.8[4)]	0.01	0.2[3)4)]	0.8[4)]
0.4	0.02			0.02		
0.5[2)]	0.04			0.04		
0.6	0.06			0.06		
0.8[2)]	0.10			0.10		
1	0.15			0.15		
1.2	0.25	0.25		0.2		
1.5[2)]	0.5	0.5		0.3	0.3	
2	1	1	1	0.45	0.45	
2.5[2)]	1.5	1.5	1.5	0.6	0.6	
3	2	2	2	0.8	0.8	
4[2)]	3	3	3	1.2	1.2	1.2
5	4	4	4	1.5	1.5	1.5
6[2)]	5.5	5.5	5.5	2	2	2
8[2)]	8	8	8	3	3	3
10	11	11	11	3.5	3.5	3.5
12[2)]	14	14	14	4.5	4.5	4.5
15	18	18	18	5.5	5.5	5.5
20	25	25	25	8	8	8
25	33	33	33	10	10	10
30	40	40	40	12.5	12.5	12.5
40	60	60	60	17	17	17
50	75	75	75	22	22	22
60	90	90	90	27	27	27
80	130	130	130	35	35	35
100	170	170	170	45	45	45

[1)] This voltage is for:
- Functional insulation: the maximum impulse voltage expected to occur across the clearance (see 5.1.5)
- Basic insulation directly exposed to or significantly influenced by transient overvoltages from the low-voltage mains (see 4.3.3.3, 4.3.3.4.1 and 5.1.6): the rated impulse voltage for the equipment
- Other basic insulation (see 4.3.3.4.2): the highest impulse voltage that can occur in the circuit
For reinforced insulation, see 5.1.6.

[2)] Preferred values specified in 4.2.3
[3)] For printed wiring material, the values for pollution degree 1 apply, except that the value must not be less than 0.04 mm, as specified in Table F.4.
[4)] The minimum clearances given for pollution degree 2 and 3 are based on the reduced withstand characteristics of the associated creepage distance under humidity conditions (see IEC 60664-5).
[5)] For parts or circuit within equipment subject to surge voltages based on 4.3.3.4.2, interpolation of values is allowed. However, standardization is achieved by using the preferred series of impulse voltage values based on 4.2.3.
[6)] The dimensions for pollution degree 4 are as specified for pollution degree 3, except that the minimum clearance is 1.6 mm.

Tests and Testing Procedures per IEC/EN Standards (continued)

Electrical Tests (continued)

• Insulation Parameters per IEC/EN 60664-1 (continued)

Creepage Distances, Rated Voltages, Material Groups

Criteria for dimensioning creepage distances are the rated voltages, pollution degrees and material groups.
The pollution degrees specified for the clearances, and its quoted allocation to locations, is also applicable for creepage distances.
Tables F.3 a and F.3 b of DIN EN 60664-1/VDE 0110-1 contain the rated voltages that have to be considered for dimensioning the minimum creepage distances.

Altitude (in m)	Standard Air Pressure (in kPa)	Multiplier for Clearances
2000	80	1
3000	70	1.14
4000	62	1.29
5000	54	1.48
6000	47	1.7
7000	41	1.95
8000	35.5	2.25
9000	30.5	2.62
10000	26.5	3.02
15000	12	6.67
20000	5.5	14.5

Table F.3a: Single-Phase, 3- or 2-Conductor, AC or DC Systems

Nominal voltage of the power supply system (mains)*	Voltages for Table F.4	
	For insulation conductor-to-conductor[1)]	For insulation conductor-to-ground[1)]
	All systems	Three-conductor systems, center-point grounded 
V	V	V
12.5	12.5	
24 25	25	
30	32	
42 48 50**	50	
60	63	
30 to 60	63	32
100**	100	
110 120	125	
150**	160	
200	200	
110 to 200	200	100
220	250	
110 to 220 120 to 240	250	
300**	320	
220 to 440	500	250
600**	630	
480 to 960	1000	500
1000**	1000	

[1)] Conductor-to-ground insulation level for non-grounded or impedance-grounded systems equals that for conductor-to-conductor, as the operating voltage to ground of any conductor can, in practice, approach full conductor-to-conductor voltage. This is because the actual voltage to ground is determined by the insulation resistance and capacitive reactance of each conductor to ground; thus, low (but acceptable) insulation resistance of one conductor can in effect ground it and raise the other two to full conductor-to-conductor voltage to ground.
*For the relationship to rated voltage, see 4.3.2.
**These values correspond to the values given in Table F.1.

Table F.3b: Single-Phase, 4- or 3-Conductor AC Systems

Nominal voltage of the power supply system (mains)*	Voltages for Table F.4		
	For insulation conductor-to-conductor[1]	For insulation conductor-to-ground[1]	
	All systems	Three-phase, 4-conduct. systems with grounded neutral conductor[2] 	Three-phase, 3-conduct. systems, non-grounded[1] or grounded conductor 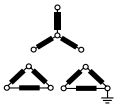
V	V	V	V
60	63	32	63
110 120 127	125	80	125
150**	160		160
200	200		200
208	200	125	200
220 230 240	250	160	250
300**	320		320
380 400 415	400	250	400
440	500	250	500
480 500	500	320	500
575	630	400	630
600**	630		630
660 690	630	400	630
720 830	800	500	800
960	1000	630	1000
1000**	1000		1000

[1] Conductor-to-ground insulation level for non-grounded or impedance-grounded systems equals that for conductor-to-conductor, as the operating voltage to ground of any conductor can, in practice, approach full conductor-to-conductor voltage. This is because the actual voltage to ground is determined by the insulation resistance and capacitive reactance of each conductor to ground; thus, low (but acceptable) insulation resistance of one conductor can in effect ground it and raise the other two to full conductor-to-conductor voltage to ground.

[2] For equipment used on both three-phase, 4-conductor and three-phase, 3-conductor systems, grounded and non-grounded, use only the values for 3-conductor systems.

*For the relationship to rated voltage, see 4.3.2.

**These values correspond to the values given in Table F.1.

Material Groups

Insulation materials are classified into four groups according to their Comparative Tracking Index (CTI) as follows:

Material Group I:	600 ≤ CTI
Material Group II:	400 ≤ CTI < 600
Material Group IIIa:	175 ≤ CTI < 400
Material Group IIIb:	100 ≤ CTI < 175

The CTI values above refer to values obtained in accordance with DIN EN 60664-1/VDE 0110-1 on samples specially made for this purpose and tested with Solution A.

Tests and Testing Procedures per IEC/EN Standards (continued)

Electrical Tests (continued)

• Insulation Parameters per IEC/EN 60664-1 (continued)

Table F.4: Creepage Distances to Avoid Failure due to Tracking

DIN EN 60664-1/VDE 0110-1

Voltage[1] (RMS)	Minimum Creepage Distances								
	Printed Circuits		Pollution Degree						
	Pollution Degree								
	1 All Material Groups	2 All Material Groups except IIIb	1 All Material Groups	2 Material Group I	2 Material Group II	2 Material Group III	3 Material Group I	3 Material Group II	3 Material Group III[2]
V	mm	mm	mm	mm	mm	mm	mm	mm	mm
10	0.025	0.04	0.08	0.4	0.4	0.4	1	1	1
12.5	0.025	0.04	0.09	0.42	0.42	0.42	1.05	1.05	1.05
16	0.025	0.04	0.1	0.45	0.45	0.45	1.1	1.1	1.1
20	0.025	0.04	0.11	0.48	0.48	0.48	1.2	1.2	1.2
25	0.025	0.04	0.125	0.50	0.5	0.5	1.25	1.25	1.25
32	0.025	0.04	0.14	0.53	0.53	0.53	1.3	1.3	1.3
40	0.025	0.04	0.16	0.56	0.8	1.1	1.4	1.6	1.8
50	0.025	0.04	0.18	0.6	0.85	1.2	1.5	1.7	1.9
63	0.04	0.063	0.2	0.63	0.9	1.25	1.6	1.8	2
80	0.063	0.1	0.22	0.67	0.95	1.3	1.7	1.9	2.1
100	0.1	0.16	0.25	0.71	1	1.4	1.8	2	2.2
125	0.16	0.25	0.28	0.75	1.05	1.5	1.9	2.1	2.4
160	0.25	0.4	0.32	0.8	1.1	1.6	2	2.2	2.5
200	0.4	0.63	0.42	1	1.4	2	2.5	2.8	3.2
250	0.56	1	0.56	1.25	1.8	2.5	3.2	3.6	4
320	0.75	1.6	0.75	1.6	2.2	3.2	4	4.5	5
400	1	2	1	2	2.8	4	5	5.6	6.3
500	1.3	2.5	1.3	2.5	3.6	5	6.3	7.1	8 (7.9)[4]
630	1.8	3.2	1.8	3.2	4.5	6.3	8 (7.9)[4]	9 (8.4)[4]	10 (9)[4]
800	2.4	4	2.4	4	5.6	8	10 (9)[4]	11 (9.6)[4]	12.5 (10.2)[4]
1000	3.2	5	3.2	5	7.1	10	12.5 (10.2)[4]	14 (11.2)[4]	16 (12.8)[4]
1250			4.2	6.3	9.	12.5	16 (12.8)[4]	18 (14.4)[4]	20 (16)[4]
1600			5.6	8.	11	16	20 (16)[4]	22 (17.6)[4]	25 (20)[4]
2000			7.5	10	14	20	25 (20)[4]	28 (22.4)[4]	32 (25.6)[4]
2500			10	12.5	18	25	32 (25.6)[4]	36 (28.8)[4]	40 (32)[4]
3200			12.5	16	22	32	40 (32)[4]	45 (36)[4]	50 (40)[4]
4000			16	20.	28	40	50 (40)[4]	56 (44.8)[4]	63 (50.4)[4]
5000			20	25	36	50	63 (50.4)[4]	71 (56.8)[4]	80 (64)[4]
6300			25	32	45	63	80 (64)[4]	90 (72)[4]	100 (80)[4]
8000			32	40	56	80	100 (80)[4]	110 (88)[4]	125 (100)[4]
10000			40	50	71	100	125 (100)[4]	140 (112)[4]	160 (128)[4]
12500			50[3]	63[3]	90[3]	125[3]			
16000			63[3]	80[3]	110[3]	160[3]			
20000			80[3]	100[3]	140[3]	200[3]			
25000			100[3]	125[3]	180[3]	250[3]			
32000			125[3]	160[3]	220[3]	320[3]			
40000			160[3]	200[3]	280[3]	400[3]			
50000			200[3]	250[3]	360[3]	500[3]			
63000			250[3]	320[3]	450[3]	600[3]			

[1] This voltage is for:
Functional insulation; the working voltage
Basic and supplementary insulation of the circuit energized directly from the mains (see 4.3.2.2.1): for the voltage rationalized through Table F.3a or F.3b, based on the rated voltage of the equipment, or the rated insulation voltage
Basic and supplementary insulation of systems, equipment and internal circuits not energized directly from the mains (see 4.3.2.2.2.): the highest rms voltage which can occur in the system, equipment or internal circuit when supplied at rated voltage and under the most taxing combination of operation conditions within equipment rating
[2] Material group IIIb is not recommended for applications in pollution degree 3 above 630 V.
[3] Provisional data based on extrapolation. Technical committees who have other information based on experience may use their dimensions.
[4] 4) The values in brackets must only be applied for reducing creepage distances if a rib is used (see 5.2.5).

The high degree of accuracy of the creepage distances given in the table does not imply that the measuring accuracy must be of the same quality.

Depending on the intended use, WAGO's terminal blocks, as well as splicing and pluggable connectors, are suitable for pollution degrees 2 or 3 and for overvoltage categories II or III.

Example:
WAGO Rail-Mount Through Terminal Blocks
According to IEC 60947-7-1/ EN 60947-7-1/VDE 0611-1), these blocks have the following ratings:

800 V / 8 kV / 3

Rated voltage:	800 V
Rated surge voltage:	8 kV
Pollution degree:	3
Overvoltage category:	III

WAGO's connectors for household and similar mounted installations are rated per IEC 60998-1/EN 60998-1/ VDE 0613-1, Table 3.

Example:
WAGO PUSH WIRE® Connectors for Junction Boxes
According to this standard, these connectors are rated for:
* 400 V / 4 kV / 2
* grounded circuits

Rated voltage:	400 V
Rated surge voltage:	4 kV
Pollution degree:	2
Overvoltage category:	II

Table 3: Clearances and Creepage Distances
(IEC/EN 60998-1)

Rated Insulation Voltage V	Clearances/Creepage Distances mm
≤ 130	1.5
> 130 and ≤ 250	3
> 250 and ≤ 450	4
> 450 and ≤ 750	6
> 750	8

Tests and Testing Procedures per IEC/EN Standards (continued)

Electrical Tests (continued)

• Power-Frequency Withstand Voltage Test per IEC/EN 60947-7-1, IEC/EN 60947-1

This testing procedure verifies creepage distances. Creepage distances, i.e., the distances of creeping currents, are caused by conductive impurities on the surface of the insulation housing. Apart from the amount of impurities to which a terminal block is subjected, for example, the plastic material and housing design are also involved in generating creeping currents. The insulation material of the housing may be carbonized by a creeping current, which increases conductivity even more.
The specimen is tested using a power-frequency withstand voltage for a short time. For example, a rail-mount terminal block designed to operate at 800 V nominal voltage is usually tested using 2000 V alternating voltage for one minute. The test is passed if no flashovers or breakdowns have occurred.

• Rated Impulse Withstand Voltage Test per IEC/EN 60947-7-1, IEC/EN 60947-1

This test verifies the clearances of a product. In simplified terms, a clearance is the distance between two poles of a terminal block. If this distance is too small, voltage peaks may cause flashovers or breakdowns. The arrangement of the rated impulse withstand voltage test is identical to that of the power frequency withstand voltage test; the test voltages, however, are comparatively higher and the testing times shorter, e.g., 7.3 kV over 50 µs (see figure).

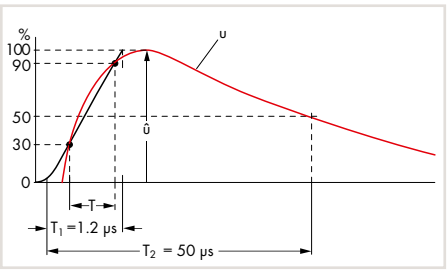

Voltage pulse: measurement curve (red) and auxiliary curve (black) for calculating the rate of rise of the pulse and the resulting (virtual) peak of the curve.

T: Time interval for calculating the rate of rise
T_1: Front time (duration between start of impulse and reaching the peak)
T_2: Total pulse duration

The test values are the values at sea level as specified in the relevant test specification.
The values indicated in the catalog correspond to an altitude of 2000 m.
The test is passed if no flashovers or breakdowns have occurred.

• IP Ratings for Electrical Equipment per IEC/EN 60529

Alphanumeric Nomenclature for Type of Protection			
Code letters IP	Protection against accidental contact and against the penetration of foreign objects or water	IP (Ingress Protection) = International degree of protection	
First code number 0 to 6	Indicates the degree of protection against accidental contact and the penetration of foreign objects.	If indicating the degree of protection requires only one digit, the other (second) digit must be substituted for with an X.	
Second code number 0 to 8	Indicates the degree of protection against water penetration.		
First code number:		Second code number:	
IP0X	No protection against accidental contact or the penetration of foreign objects	IPX0	No protection against water
		IPX1	Protection against vertically falling water
IP1X	Protection against foreign objects > 50 mm		
IP2X	Protection against foreign objects > 12 mm (e.g., finger)	IPX2	Protection against diagonally dripping water (15° angle)
IP3X	Protection against foreign objects > 2.5 mm	IPX3	Protection against water spray
IP4X	Protection against foreign objects > 1 mm	IPX4	Protection against water spray
IP5X	Protection against damaging dust deposits	IPX5	Protection against water jet, e.g., from a nozzle
IP6X	Protection against dust penetration	IPX6	Protection against flooding
		IPX7	Protection against temporary immersion
		IPX8	Protection against continuous immersion
		IPX9	Protection against high-pressure and high-temperature water jets

IP vs. NEMA	
IP Code	NEMA
10	1
11	2
54	3
14	3R
54	3S
55	4&4X
52	5
67	6&6P
52	12&12K
54	13

Tests and Testing Procedures per IEC/EN Standards (continued)

Material Tests

All WAGO products meet requirements for the following material tests:

• Needle Flame Test per IEC/EN 60947-7-1, IEC/EN 60695-11-5

This test simulates flames that may arise under certain conditions (e.g, fault current over a creepage distance, overloading of parts or components). Nearby parts can also be affected by such flames.
Not only the ignition of the test specimen resulting from an intrinsic defect is tested, but also its behavior when other parts ignite.

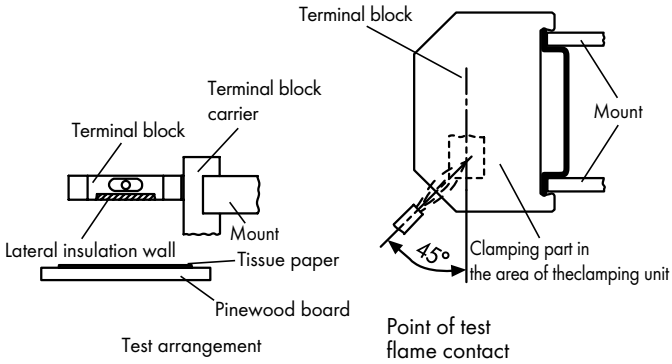

Flames must not be fuelled by the insulation materials used, thus creating a larger fire. The test specimen is exposed to a standard gas flame during a defined time period (e.g., ten seconds).
After the test flame has been removed, the specimen must self-extinguish within 30 seconds. Furthermore, a layer of tissue paper located beneath the specimen shall not be ignited by glowing particles falling from the specimen.

• Glow-Wire Test per IEC/EN 60998-1, IEC/EN 60695-2-11

In the event of failure, a high current may cause a conductor to glow.

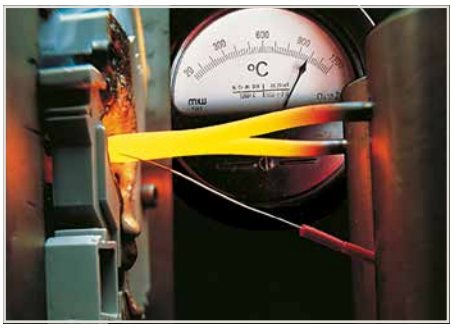

However, the glowing conductor shall not cause ignition of the product involved (e.g., a rail-mount terminal block). For the glow-wire test, the tip of the glow-wire is pressed against a surface of the test specimen (see picture).
The position of the test specimen, surface to be tested, test duration and glow-wire temperature (e.g., 960 °C/1760 °F over 30 seconds, or 850 °C/1562 °F over 5 seconds) are specified in the standards.
The specimen must be positioned such that the tip of the glow-wire acts on the surface section of the specimen (vertical surface of the specimen) that is most likely to be exposed to thermal loading during normal use.

As the highest temperature in the event of a fault is anticipated at the contact insert/wire connection, the tip of the glow-wire must act upon the section of the insulation housing that is the closest to this contact point.
The test is passed if there are no visible flames or permanent glowing, or if flames or glowing extinguish within 30 seconds after removal of the glow-wire. Furthermore, a layer of tissue paper located beneath the specimen shall not be ignited by glowing particles falling from the specimen.

Tests and Testing Procedures per IEC/EN Standards (continued)

Environmental Tests

The following tests show how a product reacts when exposed to an aggressive environment. Climatic chambers simulate standard atmospheres that could impact long-term constancy of clamping units.

All WAGO products meet requirements for the following environmental tests:

• Temperature Cycling Test per IEC/EN 60947-7-1, IEC/EN 60998-2-2

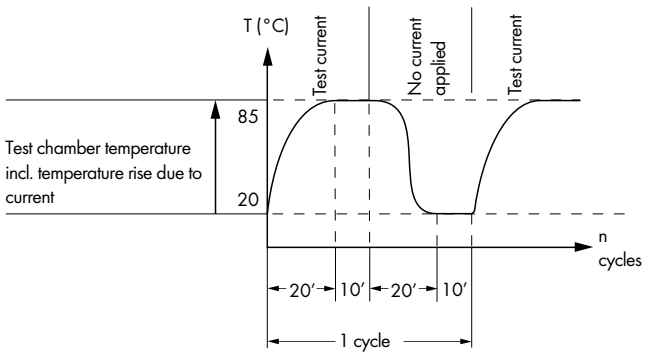

The rated current is applied to the test specimen during temperature rise and when the temperature has reached its maximum value; during the second half of the cycle, the current is zero. Voltage drop is measured every 24 cycles and must not exceed a maximum value or vary greatly. The voltage drop measured at the end of the 192nd cycle must not exceed 1.5 times the value measured after the 24th cycle. After the test, an inspection must show no changes that would impair further use of the product.

• Industrial Atmospheres per EN ISO 6988, IEC/EN 60068-2-42, IEC/EN 60068-2-60

Sulphur and its combustion products are particularly aggressive pollutants commonly found in industrial environments. A test procedure simulating such corrosive conditions consists of exposing a test specimen to water condensation in variable atmospheres containing sulphur dioxide.



A saturated atmosphere is first created in a climatic chamber by heating an aqueous sulphur dioxide solution. After less than half an hour, the test specimen is fully saturated by the condensing vapors and exposed to this atmosphere for eight hours.

After exposure to a humid atmosphere, the test specimen is subjected to dry and cooler conditions at room temperature for 16 hours. Depending on the test severity, the specimen is exposed to both these conditions several times. The gas-tightness of the clamping unit is verified by a voltage drop test.

In other test procedures, products are exposed to a dry corrosive gas atmosphere containing sulfide, nitrogen and sulfur oxides or chloride gas. These tests can be performed over a period of four to 21 days.

• Salt Spray Test per IEC/EN 60068-2-11; DNV GL, LR (Marine Applications)

This test is similar to the test performed in water condensation alternating atmospheres, except that instead of industrial atmospheres, salt mist conditions will be simulated in a heated test chamber (see picture).

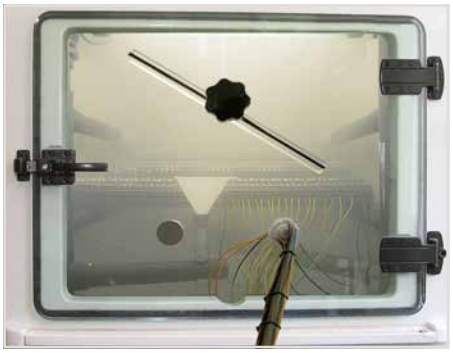

Depending on the test procedure being used, the test specimen is sprayed with salt mist for 16 hours up to 672 hours (4 weeks).
Salt spray tests are widely used, especially for ship approvals.
However, this test is performed differently than the test procedures described previously for general applications:
During a typical test, the test specimen is sprayed with a salt solution for two hours and is then stored for seven days in an atmosphere with a relative humidity between 90 and 95 %.
This procedure is repeated four times.
Voltage drop measurements are used as an evaluation criterion.

• Quick Change of Temperature per IEC/EN 60068-2-14

Without air-conditioning, distribution panels and terminal boxes are exposed to seasonal (and ever-changing) temperature extremes – especially on the open field side.
In process technology, for example, a terminal block is exposed to even quicker changes in temperature.

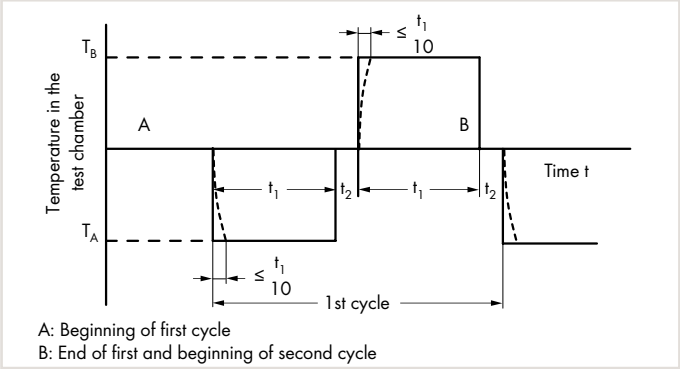

A: Beginning of first cycle
B: End of first and beginning of second cycle

To simulate such conditions, the test specimen is exposed to repeated temperature changes, for example, between T_A −40 °C (−104 °F) and T_B +70 °C (+158 °F).
The dwell time t_1 depends on the thermal capacity of the test specimen and should be between maximum of 3 hours and minimum of 10 minutes and the transition time t_2 2 ... 3 min.,
20 ... 30 sec. or less than 10 seconds.
The mechanical and electrical properties of the product are checked at the end of the test.

• Damp Heat, Cyclic (12 + 12 Hour Cycle) per IEC/EN 60068-2-30, DNV GL, LR (Marine Applications)

This test determines the suitability of electrical equipment for use and storage under conditions of high relative humidity when combined with cyclic temperature changes and, in general, producing condensation on the surface of the specimen.

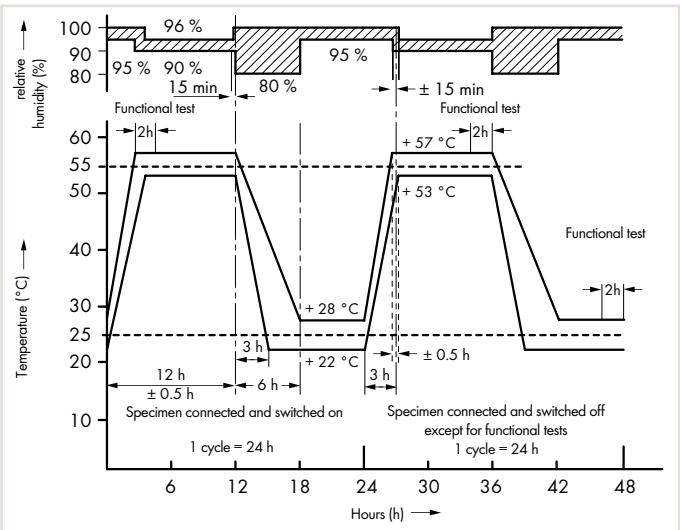

In addition to the salt spray tests, the damp heat test is also used for marine approvals.
For this test, the specimens are subjected to temperatures varying cyclically between +25 °C (+77 °F) and +55 °C (+131 °F) with a relative humidity of 95 % (for tolerances see figure).
Functional tests are performed at defined times during the storage period.
The mechanical and electrical properties of the product are checked at the end of the test.

UL Specifications – Underwriters Laboratories, USA

WAGO's terminal blocks and connectors are tested by Underwriters Laboratories Inc. according to one or more of the relevant following UL standards:

• The 273 Series PUSH WIRE® Connectors for Junction Boxes or the 224 Series Lighting Connectors are splicing wire connectors and are certified per UL 486C. These stand-alone devices carry the **UL Listing Mark** ⓤ.	UL 486 C	Splicing wire connectors
• Rail-mount terminal blocks or modular terminal blocks (e.g., 280 Series, TOPJOB® S or 260 to 262 Series terminal blocks) are approved as non-stand-alone components per UL 1059 in connection with UL 486E.	UL 1059	Standard for terminal blocks
	UL 486 E	Equipment wiring terminals for use with aluminum and/or copper conductors
• The X-COM®-SYSTEM is approved as terminal blocks per UL 1059 standard in connection with UL 486 E. It is therefore defined for field and factory wiring with at 300 V.		
• It is also approved as connectors for use in data, signal, control and power applications per UL 1977 for factory wiring at 600 V (i.e., the clamping unit must be wired under controlled manufacturing conditions).	UL 1977	Component connectors for use in data, signal, control and power applications
• Ex e II terminal blocks are approved to UL 60079-7.	UL 60079-7	Electrical apparatus for explosive gas atmospheres – Part 7: Increased safety
• Ground terminal blocks are tested for grounding and bonding applications per UL 467. Components bearing the **UR Recognition Mark** are recognized product. Additionally, after being mounted in their special applications, these components are submitted to an end-product test according to the relevant device or equipment standard.	UL 467	Grounding and bonding equipment
• Insulation materials are tested for flammability and performance per UL 94.	UL 94	Tests for flammability of plastic materials for parts in devices and appliances

14

632 Rail-Mount Terminal Block Systems

Tests and Testing Procedures per UL Standards

All WAGO products meet requirements for the following tests:

• Pull-Out Test per UL 1059, UL 486 E (Rail-Mount Terminal Blocks), UL 486 C (Splicing Wire Connectors)

In this test, the connected conductors are subjected to the appropriate pull-out forces specified in the following table without jerking for a period of one minute. Different test arrangements are specified for rail-mount terminal blocks and splicing wire connectors.

Conductor Size		Pull-Out Force, Pounds (N)					
		UL 486 E, Table 22				UL 486 C, Table 20	
AWG or kcmil	(mm^2)	Copper		Aluminum		Copper	
30	(0.05)	0,5	(2.2)	-	-	1,5	(6.7)
28	(0.08)	1	(4.5)	-	-	2	(8.9)
26	(0.13)	2	(8.9)	-	-	3	(13.4)
24	(0.2)	3	(13.4)	-	-	5	(22.3)
22	(0.32)	4,5	(20)	-	-	8	(35.6)
20	(0.52)	6,75	(30)	-	-	10	(44.5)
18	(0.82)	6,75	(30)	-	-	10	(44.5)
16	(1.3)	9	(40)	-	-	15	(66.7)
14	(2.1)	11,5	(50)	-	-	25	(111)
12	(3.3)	13,5	(60)	10	(44)	35	(155)
10	(5.3)	18	(80)	10	(44)	40	(178)
8	(8.4)	20,5	(90)	10	(44)	45	(200)
6	(13.3)	21	(94)	28	(124)	50	(222)
4	(21.2)	30	(133)	36	(160)		
3	(26.7)	35	(156)	42	(187)		
2	(33.6)	42	(186)	50	(222)		
1	(42.4)	53	(236)	61	(271)		
1/0	(53.5)	64	(285)	72	(320)		
2/0	(67.4)	64	(285)	78	(347)		
3/0	(85.0)	79	(351)	97	(432)		
4/0	(107)	96	(427)	116	(516)		
250	(127)	96	(427)	116	(516)		
300	(156)	99	(441)	116	(516)		

Test Arrangement per UL 1059, UL 486 E:

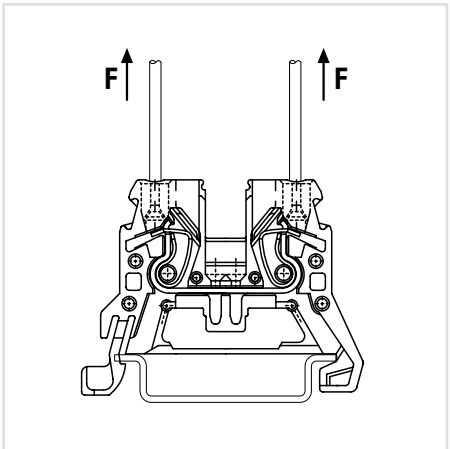

Test Arrangement per UL 486 C:

During the test, the conductors must neither slip out of the clamping unit, nor break near the clamping unit.





14

UL Specifications – Underwriters Laboratories, USA (continued)

Tests and Testing Procedures per UL Standards (continued)

• Heat Cycling Test per UL 1059, UL 486 E

Test performed per:

UL 1059

Test performed with maximum rated cross-section

Test current: 150 % of maximum rated current

84 cycles of: 3 1/2 h ON / 1/2 h OFF

The temperature rise is measured after the first and the 84th cycle.

The temperature rise must not exceed 5 °C (41 °F) after the 84th cycle, compared to the temperature measured after the first cycle.

UL 486 C (Splicing wire connectors)

UL 486 E (Equipment wiring terminals)

Test performed with maximum rated cross-section

Test current: Increased test current per UL 486 C, Table 6 UL 486 E, Table 4

500 cycles of: 1 h ON / 1 h OFF
1 1/2 h ON / 1 1/2 h OFF
(from 4/0 AWG up to 400 kcmil per UL 486 E)

The temperature rises at the terminal blocks and control conductors are measured and recorded after: 1, 25, 50, 75, 100, 125, 175, 225, 275, 350, 425 and 500 cycles.

The temperature rise must not exceed 125 °C (257 °F) and the stability factor "S" must not exceed ± 10.

Conductor Size		Test Current for Copper Conductors in A								
		UL 486 E, Table 4							UL 486 C, Table 6	
AWG or kcmil	(mm²)	Assigned Maximum Ampere Rating[b]	Static Heating[a,c,g]		Heat Cycling Temperature Ratinga 75 °C (167 °F)[d,g]		90 °C (194 °F)[e,g]		Static Heating	Heat Cycling
30	(0.05)	-		3		3.5		4	3	3.5
28	(0.08)	-		3.5		4		5	3.5	4
26	(0.13)	-		5.5		6		8	5.5	6
24	(0.2)	-		7		8		10	7	8
22	(0.32)	-		9		12		13	9	12
20	(0.52)	-		12		16		17	12	16
18	(0.82)	-		17		19		24	17	19
16	(1.3)	-		18		20		31	18	20
14	(2.1)	15	[20]	30	[22]	33	[27]	40	30	33
12	(3.3)	20	[25]	35	[28]	39	[40]	54	35	38
10	(5.3)	30	[40]	50	[45]	56	[60]	75	50	56
8	(8.4)	50		70		80		100	70	80
6	(13.3)	65		95		105		131	95	105
4	(21.2)	85		125		140		175		
3	(26.7)	100		145		165		205		
2	(33.6)	115		170		190		240		
1	(42.4)	130		195		220		275		
1/0	(53.5)	150		230		255		320		
2/0	(67.4)	175		265		300		370		
3/0	(85.0)	200		310		345		435		
4/0	(107)	230		360		405		505		
250	(127)	255		405		445		565		
300	(152)	285		445		500		625		

[a] See Section 7.2, 8.2 and 9.2 (UL 486 E)
[b] Values are for 75 °C (167 °F), not more than 3 conductors in raceway or cable ampacities, National Electric Code, ANSI/NFPA 70.
[c] Values are for 75 °C (167 °F) single conductors in free air ampacities, National Electric Code, ANSI/NFPA 70.
[d] Values are approximately 112 % of the static heating test currents.
[e] Values for 8 AWG and larger conductors are approximately 140 % of the static heating test currents.
[f] See Section 9.2.4
[g] Values in parentheses apply to connectors with assigned ampere ratings.

• Conditioning – Temperature-Rise Rest per UL 1059, UL 486 C

Test performed per:

UL 1059 (Rail-mount terminal blocks) **UL 486 C** (Splicing wire connectors)

Conditioning:

The clamping units are **pre-wired/pre-inserted nine times** using a conductor with maximum rated cross-section. At the 10th time, a new conductor is connected. After this, a static heating test is performed.

Static Heating Test:

Test current:	Terminal block rated current	Test current:	Increased test current (see Table 6)
Test duration:	30 days	Test duration:	30 days
Max. permissible temperature rise:	30 °C (86 °F)	Max. permissible temperature rise:	50 °C (122 °F)

• Grounding and Bonding Equipment per UL 467

When used in grounding and bonding equipment, e.g., terminal blocks, must withstand a short circuit test using the test currents and test durations as specified in Table 5.

In the following example, a 2 AWG (35 mm²) ground conductor terminal block (285-635) is tested for 6 seconds at 3900 A.

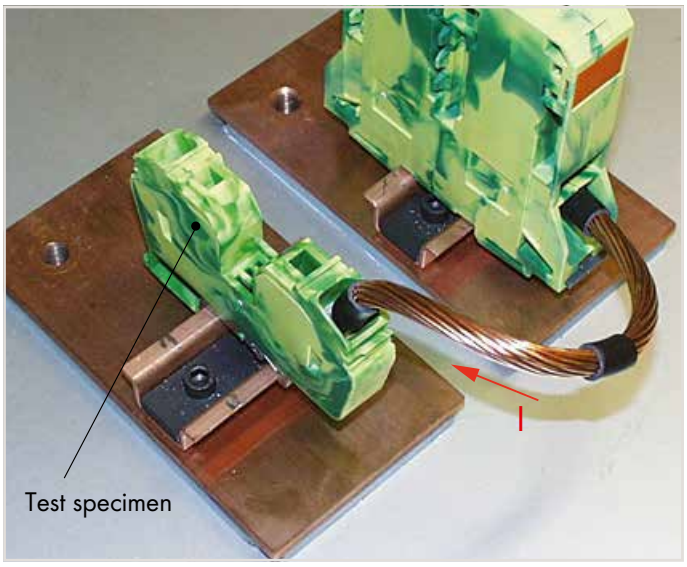

Table 5:

Conductor Size Copper		Test Duration	Test Current
AWG	mm²	s	A
14	(2.1)	4	300
12	(3.3)	4	470
10	(5.3)	4	750
8	(8.4)	4	1180
6	(13.3)	6	1530
4	(21.2)	6	2450
3	(26.7)	6	3100
2	(33.6)	6	3900
1	(42.4)	6	4900
1/0	(53.5)	9	5050
2/0	(67.4)	9	6400
3/0	(85.0)	9	8030
4/0	(107)	9	10100
250 kcmil	(127)	9	12000

After the test, the specimen must neither show evidence of cracking, breaking or melting, nor any changes in electrical properties.

UL Specifications – Underwriters Laboratories, USA (continued)

Tests and Testing Procedures per UL Standards (continued)

• Insulation Parameters per UL 1059

The table below shows the potential involved and the corresponding clearances and creepage distances required in different applications.

Table 8.1: Minimum Acceptable Spacing for Terminal Blocks per UL 1059 Standard

		Spacing in inches (mm) between uninsulated live parts of opposite polarity, uninsulated live parts and uninsulated grounded parts other than the enclosure			
Application	Potential Involved in Volts	Through Air		Over Surfaces	
A. Dead-front switchboards, panelboards, service equipment and similar applications	51 ... 150 151 ... 300 301 ... 600	1/2 3/4 1	(12.7) (19.1) (25.4)	3/4 1-1/4 2	(19.1) (31.8) (50.8)
B. Commercial appliances, including business equipment, electronic data processing equipment and similar applications	51 ... 150 151 ... 300 301 ... 600	1/16[a] 3/32[a] 3/8	(1.6)[a] (2.4)[a] (9.5)	1/16[a] 3/32[a] 1/2	(1.6)[a] (2.4)[a] (12.7)
C. Industrial, general	51 ... 150 151 ... 300 301 ... 600	1/8[a] 1/4 3/8	(3.2)[a] (6.4) (9.5)	1/4 3/8 1/2	(6.4) (9.5) (12.7)
D. Industrial, devices having limited ratings[b]	51 ... 300 301 ... 600	1/16[a] 3/16[a]	(1.6)[a] (4.8)[a]	1/8[a] 3/8	(3.2)[a] (9.5)
E. Terminal blocks rated 601 ... 1500 V[c]	601 ... 1000 1001 ... 1500	0.55 0.70	(14.0) (17.8)	0.85 1.20	(21.6) (30.5)

Notes:

1 A slot, groove, or similar, 0.013 inch (0.33 mm) wide or less in the contour of the insulating material is to be disregarded.

2 Air space of 0.33 mm or less between a live part and an insulating surface is to be disregarded for the purpose of measuring over surface spacing.

[a] The spacing between terminal blocks of opposite polarity and the spacing between a terminal block and a grounded dead metal part shall not be less than 1/4 inch (6.4 mm) if short-circuiting or grounding of such terminal blocks may result from protruding wire strands.

[b] See Section 8.5 (UL 1059)
The spacing values indicated in sub-paragraph D in Table 8.1 are applicable to a terminal block for use only in or with industrial control equipment where the load on any single circuit of the terminal block does not exceed 15 A at 51 ... 150 V, 10 A at 151 ... 300 V, 5 A at 301 ... 600 V or the maximum ampere rating, whichever is less.

[c] Applies only to terminal blocks investigated to Part II of this standard. See Section 22.1 (UL 1059).

• Flammability Test per UL 94

This test provides an indication of the material's ability to extinguish a flame, once ignited.
Several ratings can be applied, based on the rated of burning, time to extinguish, ability to resist dripping, and after-glow extinguishing time.
Each material tested may receive several ratings, depending on the wall thickness.
UL 94 Rating Categories:

V2
- Specimen mounted vertically
- Burning stops within 30 seconds after the flame is removed
- Flaming drips allowed
- After-glow extinguishes within 60 seconds max.

V1
- Specimen mounted vertically
- Burning stops within 30 seconds after the flame is removed
- No flaming drips allowed
- After-glow extinguishes within 60 seconds max.

V0
- Specimen mounted vertically
- Burning stops within 10 seconds after the flame is removed
- No flaming drips allowed
- After-glow extinguishes within 30 seconds max.

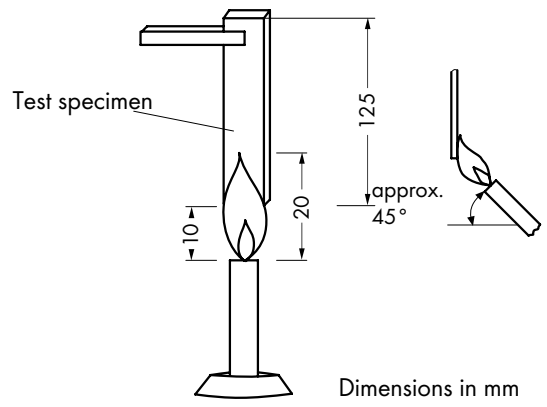

During the test, a 3/4 inch (20 ±1 mm) flame is applied for two 10-second intervals to the specified bar specimen held vertically.

"Alu-Plus" Contact Paste

Syringe





WAGO Lighting Connectors:
Push nozzle of the "Alu-Plus" syringe first into the circular and then into the square conductor entry hole of the WAGO lighting connector.

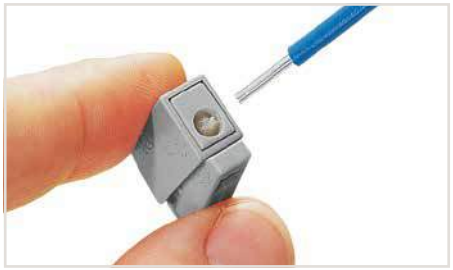

Press plunger down until the "Alu-Plus" has filled both entry holes.

Note: Not suitable for higher temperature applications!

Item No.	Pack. Unit
Syringe, contents: 20 ml "Alu-Plus" contact paste	
249-130	20 (4x5)



WAGO Rail-Mount Terminal Blocks (up to 4 mm²/12 AWG):
For each conductor entry: Insert nozzle of the "Alu-Plus" syringe in every open conductor entry hole (one after the other).

WAGO "Alu-Plus" in the syringe offers a higher degree of reliability and cleanness when terminating solid aluminum conductors. Filling is quickly performed on selected WAGO connectors and terminal blocks (see pictures).



Press plunger down until "Alu-Plus" has filled all conductor entry holes.

❶ Aluminum conductors per IEC 61545 standard, Class B, "Alloy 1370" with 90 ... 180 N/mm² tensile strength and 1 ... 4 % elongation.
Standard values: 90 ... 180 MPa tensile strength, 1 ... 4 % elongation (per EN 615.4.1)

Terminating Aluminum Conductors

WAGO spring clamp terminal blocks are suitable for solid aluminum conductors up to 4 mm² / 12 AWG if WAGO "Alu-Plus" contact paste is used for termination.

WAGO "Alu-Plus":
- Automatically destroys the oxide film during clamping
- Prevents fresh oxidation at the clamping point
- Prevents electrolytic corrosion between aluminum and copper conductors (in the same terminal block)
- Offers permanent protection against corrosion

Using terminal blocks with CAGE CLAMP® Spring Pressure Connection Technology, aluminum conductors must first be cleaned with a blade and then immediately be inserted into the clamping units filled with "Alu-Plus" contact paste.

It is also possible to apply WAGO "Alu-Plus" additionally on the whole surface of the aluminum conductor before termination. Please note that the nominal currents must be adapted to the reduced conductivity of the aluminum conductors:

2.5 mm² (14 AWG) = 16 A
4 mm² (12 AWG) = 22 A

Material Specifications

Insulation Materials

WAGO primarily uses polyamide (PA 66 and PA 46) as carriers of current-conducting parts and polycarbonate (PC) as insulation material (see table). For more than 40 years, these materials have proven themselves in WAGO products and all are approved by certified, third-party agencies.
WAGO primarily uses polyamide (PA 66 and PA 46) for housing current-conducting parts, as well as polyphthalamide (PPA) and polycarbonate (PC) for insulation material (see table). For more than 50 years, these materials have proven themselves in WAGO products and all are approved by certified, third-party agencies. All listed halogen-free and flame-retardant polymer materials do not contain any heavy metals, silicone, asbestos, or formaldehyde as formulation components.

Table: Standard Insulation Materials

Material	PA 66	PA 66 GF	PPA GF	PA 46	PC	PC
Flammability UL 94 flammability test ratings	V0	V0	V0	V2	V2	V0
Oxygen Index (OI) per EN ISO 4589-2	> 32 %	> 33 %	> 37 %	> 27 %	> 26 %	> 35 %
Glow-wire test per IEC 60695-2-12 GWFI* IEC 60695-2-13 GWIT*	850 °C 775 °C	850 °C 775 °C	850 °C 775 °C	750 °C 725 °C	800 °C 850 °C	960 °C 850 °C
Comparative Tracking Index (CTI) per IEC 60112	600 V	600 V	600 V	375 V	225 V	225 V
Temperature of the ball indentation hardness test per IEC 60695-10-2	≥ 125 °C	≥ 175 °C	≥ 225 °C	n.s.**	≥ 125 °C	≥ 125 °C
RTI impact per UL 746B	105 °C	100 °C	115 °C	115 °C	125 °C	120 °C
Heat deflection temperature (HDT/B) per ISO 75 (bending stress A*: 1.8 MPa; B: 0.45 MPa)	215 °C	235 °C	285 °C	280 °C	130 °C (1.8 MPa)	130 °C (1.8 MPa)
Surface resistivity per IEC 60093	10^{12} Ω	10^{12} Ω	10^{15} Ω	10^{13} Ω	10^{15} Ω	10^{15} Ω
Specific contact resistance per IEC 60093	10^{15} Ω/cm	10^{15} Ω/cm	10^{13} Ω/cm	10^{13} Ω/cm	10^{11} Ω/cm	10^{13} Ω/cm
Dielectric strength per IEC 60243-1	30 kV/mm	40 kV/mm	25 kV/mm	25 kV/mm	25 kV/mm	29 kV/mm

*Value depends on wall thickness, EN 60335 compliance upon request; **n. s. = not specified

Polyamide (PA 66)
WAGO uses modified, halogen-free, flame-retardant polyamides.

These materials do not corrode, are difficult to ignite and feature self-extinguishing properties (V0 rating per UL 94).

Adhering to UL 746C, the polyamides used at WAGO have a continuous operating temperature of 105 °C (221 °F) based on the relative temperature index with impact load ($_{RTI}$imp). This ensures that the necessary electrical and mechanical insulating properties are maintained at a sufficiently guaranteed level over a long period of time.

The short-term upper temperature limit is 200 °C (392 °F).

In lower temperature ranges, it has been determined that no damage to the insulation material occurs during usage down to −35 °C (−31 °F). After installation and wiring, WAGO products can even be used at temperatures down to −60 °C (−76 °F).

Environmental humidity (up to 2.5 % in a standard atmosphere) is absorbed, providing the polyamides with optimum elasticity, strength and durability.

In practical use, basic stabilization of WAGO's polyamides has been proven over many years as sufficient to prevent damage caused by ozone or UV radiation exposure in intended applications.

Polyamides have excellent resilience against the most demanding climates and have proven themselves in tropical applications worldwide. Insulation parts made of polyamide are resistant to insects. The material does not provide oxygen or other biogenic elements to microorganisms.

The presence of anaerobic earth bacteria, mold, fungus and enzymes does not degrade the material.

Polyamides are resistant to most fuels, greases, and oils, as well as the most commonly used cleaners, such as alcohol, Freon, Frigen, and carbon tetrachloride. Acid resistance depends on the acid type and concentration, as well as the exposure time.

The use of insulation materials during in-house production at WAGO only occurs after acceptance of factory test certificates and specified material tests.

Glass Fiber-Reinforced Polyamide (PA 66 GF)
WAGO uses glass-fiber-reinforced polyamides for components with increased mechanical demands, such as levers, push-buttons or housings exposed to high stresses, because glass-reinforced polyamides have significantly higher characteristic properties than non-reinforced polyamides.

In general, materials are used that have excellent creepage current resistance, flammability ratings and high temperature resistance.

More data can be found in the table.

Polyphthalamide (PPA GF)
Glass-fiber-reinforced, high-performance polyamides are ideal for high-temperature applications, due to the material's high level of thermal dimensional stability, its low dependence on ambient conditions and its excellent strength properties. The material's outstanding tracking resistance permits short creepage distances to be incorporated into miniature components. Fire protection equipment enables placement into flammability class V0 per UL 94 – even for extremely thin walls. PPA GF absorbs minute amounts of moisture from the ambient air, making it ideal for reflow soldering applications and for thin-walled, dimensionally stable components.

More data can be found in the table.

Polyamide (PA 46)
In comparison with PA 66, PA 46 has substantially higher dimensional stability under heat. The relative temperature index with impact load (RTI_{imp}) is 115 °C (239 °F) for PA 4.6.
The reliable short-term temperature for the type used by WAGO is 280 °C (536 °F).

More data can be found in the table.

Polycarbonate (PC)
Polycarbonate has excellent dimensional stability under heat. The electrical and mechanical properties remain intact at extremely high temperatures up to approximately 120 °C (248 °F) per UL Yellow Card. Its excellent electrical insulating properties and dimensional stability are virtually independent of environmental conditions, such as humidity and temperature. Highly precise components can be created due to the low shrinkage of the material during injection molding. Polycarbonate has excellent weather resistance and is also highly resistant to high-energy radiation.
If the PC is not colored, then the components are glass-clear.
Thanks to its desirable properties (e.g., dimensional stability, heat resistance, non-flammability, durability and transparency), PC is a proven and widely used material in the electrical industry.

Depending on the demands placed on the finished product, WAGO uses polycarbonates that carry flammability classifications V2 and V0 per UL 94.

Medium-viscosity PC is used that features excellent chemical resistance.

Material Specifications

Contact Materials

Hard and extra-hard electrolytic copper (ECu), as well as extra-hard copper alloys are the standard materials used for the current-carrying parts of all WAGO products.

These materials combine excellent conductivity and good chemical resistance without the risk of stress-induced cracking.

Contact Plating

The special tin layer, which is the standard layer for all current-carrying parts in WAGO products, ensures perfect long-term protection against corrosive substances. Furthermore, these layers provide a gas-tight contact that ensures a durable transition resistance.

At the clamping unit, the conductor is embedded into the soft tin layer via high contact pressure. This protects the contact area against corrosion.

The thick tin layer also ensures good solderability of both PCB terminal block and connector solder pins.

Clamping Spring Material

Every WAGO clamping spring is made of high-quality, accurately tested austenitic chrome nickel steel (CrNi) with high tensile strength, which boasts proven corrosion resistance through long-term usage.

It is resistant to sea spray, city pollutants and industrial emissions (e.g., sulfur dioxide, hydrogen sulfide).

At room temperatures of approximately 20 °C (68 °F), the material is resistant to salt solutions up to 30 % and dilute phosphoric acids up to 30 %.

Even after decades of use, no galvanic corrosion between the chrome nickel spring steel (in connection with the contact materials used by WAGO) and the connected copper conductors has been detected.

The relaxation of the material as a function of time and surrounding temperatures up to 105 °C (221 °F) can be ignored. Samples loaded with 500 N/mm² at a temperature of 250 °C (482 °F) showed a relaxation of only 1.5 %.

In certain product lines, the clamping springs are thermally treated at temperatures between 350 °C (662 °F) and 420 °C (788 °F) after production.

This treatment reduces internal stress due to the material's mechanical deformation, which may result in a slight brown discoloration of the spring surface.

WAGO only accepts deliveries of chrome nickel spring steel against certificates of conformity and after select material tests have been performed.

Electrical Engineering Laboratory Product Safety for Our Customers

WAGO's Minden, Germany laboratory is an "accredited test lab for electrical and mechanical tests on terminal blocks and connectors, as well as for environment simulations."

Accreditation, as ISO/IEC 17011:2004 defines, is a third party-attestation related to a conformity assessment body conveying formal demonstration of its competence to carry out specific conformity assessment tasks.

Accreditation, according to DIN EN ISO/IEC 17025, is granted by the Deutsche Akkreditierungsstelle GmbH DAkkS (German Accreditation Office GmbH DAkkS). This national accreditation office, which was established by the German Federal Ministry for Economics and Technology (BMWi), certifies that our test laboratory is officially recognized as possessing the necessary expertise to conduct defined tests and types of tests independently and objectively.



Visitor Center

Through obtaining the accreditation, the following objectives were achieved:

- Exceeding customer requirements
- Workflow optimization
- Clearly defined processes
- Clear organization and structure
- Greater transparency
- Consistent, high-quality laboratory testing
- Maximum traceability
- Traceable measurement results
- Sustainable quality awareness

Conductor Retention Force Testing



Vibration- and Shock-Resistance Testing



High-Voltage Test





DAkkS Deutsche Akkreditierungsstelle

Deutsche Akkreditierungsstelle GmbH

Beliehene gemäß § 8 Absatz 1 AkkStelleG i.V.m. § 1 Absatz 1 AkkStelleGBV
Unterzeichnerin der Multilateralen Abkommen von EA, ILAC und IAF zur gegenseitigen Anerkennung

Akkreditierung

Die Deutsche Akkreditierungsstelle GmbH bestätigt hiermit, dass das Prüflaboratorium

WAGO Kontakttechnik GmbH & Co. KG
Hansastraße 27, 32423 Minden

die Kompetenz nach DIN EN ISO/IEC 17025:2005 besitzt, Prüfungen in folgenden Bereichen durchzuführen:

Elektrische und mechanische Prüfungen an Klemmen und Steckverbinder sowie Umweltsimulation

Die Akkreditierungsurkunde gilt nur in Verbindung mit dem Bescheid vom 18.12.2014 mit der Akkreditierungsnummer D-PL-19704-01 und ist gültig bis 17.12.2019. Sie besteht aus diesem Deckblatt, der Rückseite des Deckblatts und der folgenden Anlage mit insgesamt 5 Seiten.

Registrierungsnummer der Urkunde: **D-PL-19704-01-00**

Frankfurt am Main, 18.12.2014

Im Auftrag Dipl.-Ing. (FH) Ralf Egner
Abteilungsleiter

General Technical Information on Electrical Equipment Used in Hazardous Areas

A prerequisite for a potentially explosive hazard is the formation of an explosive atmosphere. Such an atmosphere can be produced at any location where flammable gases or liquids are manufactured, processed, transported and/or stored.
Such **hazardous areas** can be found in a wide range of industries, including chemical plants, refineries, power plants, paint producing facilities, painting shops, filling stations, vehicles, sewage treatment plants, airports, grain mills or harbor facilities.

THE FOLLOWING APPLIES AS A GUIDELINE FOR THE UNDERLYING PRINCIPLE FOR EXPLOSION PROTECTION:

General Requirements

The European EN 60079-0 Standard – VDE 0170 Classification, Part 1 – contains general requirements for the design and testing of electrical equipment to be used in hazardous areas.
This ensures this equipment does not cause an explosion in the surrounding atmosphere.
EN 60079-0 is supplemented or revised by the European standards indicated on the right which refer to the specifically standardized types of protection.

Electrical Equipment

Electrical equipment includes all items used in whole or in part with electricity. This includes items for generation, transport, distribution, storage, measurement, control, conversion and consumption of electrical power, as well as telecommunications.

Ex Components

Ex components are elements of electrical equipment for hazardous areas that are marked with the "U" letter. These components must not be used on their own in such areas and require an additional certificate when used in such areas when installed in the electrical equipment.

Ignition Protection Categories

Only explosion-proof (protected) equipment must be used in areas in which an explosive atmosphere may still be expected despite the implementation of prevention measures.
Explosion-protected electrical equipment can have various types of protection in accordance with the EN 60079 standard requirements.
Protection used by the manufacturer essentially depends on the type and function of the apparatus. From a safety point of view, all standardized types of protection should be viewed as equal.
The ignition protection category "n" exclusively describes the use of explosion-protected electrical components in Zone 2. This zone includes areas in which hazardous, potentially explosive atmospheres are likely to occur rarely or short-term. This represents a transition between Zone 1, in which explosion protection is required, and the safe area in which, for example, welding may be performed at any time.
Regulations covering these electrical components are being prepared worldwide. Organizations such as KEMA in the Netherlands, or PTB in Germany certify that the devices meet the requirements of the EN 60079-15 standard.
Ignition protection category "n" also requires that electrical equipment be provided with additional ID markings as follows:

- A – non-sparking (function modules without relays/switches)
- AC – sparking, contacts protected with seals (function modules with relays/ without switches)
- L – limited power (function modules with switches)

The table on the opposite page shows an overview of the standardized ignition protection categories and describes their basic principle, as well as typical applications.

Ignition Protection Categories			
Symbol	**Standard**	**Explanation**	**Application Area**
"o"	**IEC 60079-6 EN 60079-6**	**Equipment protection by oil immersion:** Electrical equipment or parts of such equipment are immersed in oil.	Zones 1 + 2
"p"	**IEC 60079-2 EN 60079-2**	**Equipment protection by pressurized enclosure:** The ingress of the external (explosive) atmosphere into the electrical equipment housing is prevented by maintaining a protective gas internally at a pressure above that of the external atmosphere.	Zones 1 + 2
"q"	**IEC 60079-5 EN 60079-5**	**Equipment protection by sand filling:** Filling the electrical equipment housing with fine grain sand prevents the ignition of a surrounding explosive atmosphere by an electric arc generated in the housing.	Zones 1 + 2
"d"	**IEC 60079-1 EN 60079-1**	**Equipment protection by flameproof enclosures:** The parts that could ignite an explosive atmosphere are encapsulated in a housing, which will withstand the explosion pressure within the housing.	Zones 1 + 2
"e"	**IEC 60079-7 EN 60079-7**	**Equipment protection by increased safety:** Additional measures applied to achieve increased security against the possibility of excessive temperatures and the occurrence of arcs or sparks.	Zones 1 + 2
"i"	**IEC 60079-11 EN 60079-11**	**Equipment protection by intrinsic safety:** Power circuit in which no sparks or thermal effects can occur and cause the ignition of a certain explosive atmosphere.	Zones 1 + 2 following special testing Zone 0
"n"	**IEC 60079-15 EN 60079-15**	**Equipment protection by type of protection "n":** Electrical equipment of group II for use in areas in which an explosive mixture of gas, vapor or mist is unlikely to occur during normal operation and, if it does, will be for a short period.	Zone 2
"m"	**IEC 60079-18 EN 60079-18**	**Equipment protection by cast encapsulation:** Dangerous electrical equipment is embedded in a cast mass. This corresponds approximately to the known special Ex s protection type.	Zones 1 + 2
	IEC 60079-25 EN 60079-25	**Intrinsically safe electrical systems "i":** Assembly of interconnected electrical equipment in which the circuits intended for use, as a whole or in part, in hazardous environments are intrinsically safe. It is documented accordingly in the system description	Zones 1 + 2 following special testing Zone 0
	IEC / TS 60079-27	**FISCO standard:** Electrical equipment for explosive gas atmospheres – Part 27: Fieldbus intrinsically safe concept (FISCO) and Fieldbus non-incendive concept (FNICO)	

General Technical Information on Electrical Equipment Used in Hazardous Areas
(continued)

Harzardous Areas

Hazardous areas are zones in which the atmosphere may become explosive. An explosive atmosphere is a mixture of flammable substances in the form of gases, vapors or mixtures with air under atmospheric conditions in critically mixed ratios such that excessive high temperature, arcs or sparks may cause an explosion.

DIN EN 1127-1 and all other related standards that are well-known divide up hazardous areas according to the likelihood of the occurrence of an explosive atmosphere into the following zones:

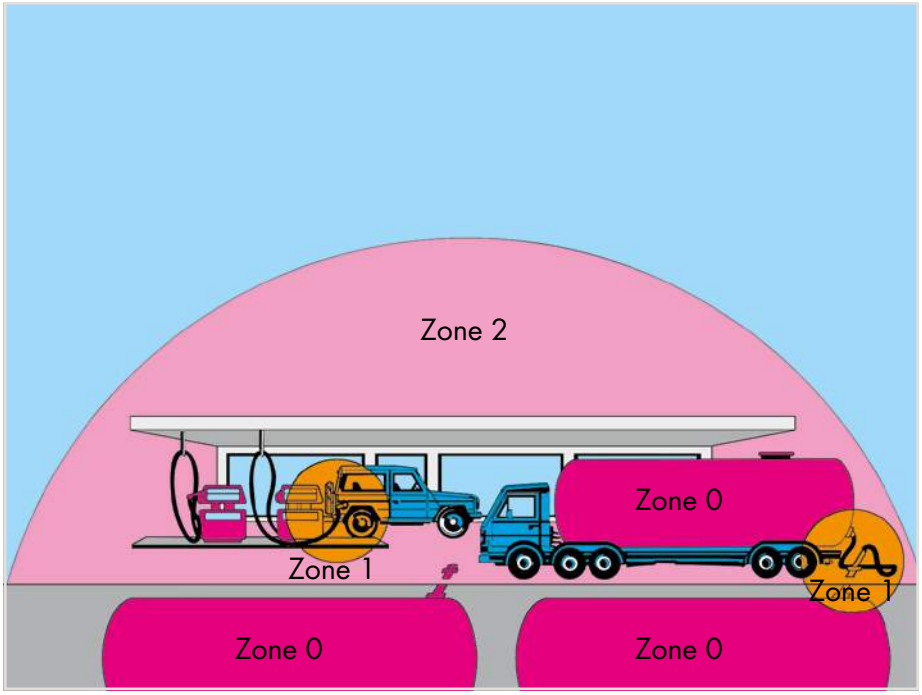

Hazardous areas due to explosive gases, vapors and mists:

Zone 0:

Areas in which an explosive atmosphere is present continuously, for long periods or frequently.

Zone 1:

Areas in which hazardous, potentially explosive atmospheres are likely to occur occasionally during normal operation.

Zone 2:

Areas in which an explosive atmosphere is likely to occur rarely or only for a short period during normal operation.

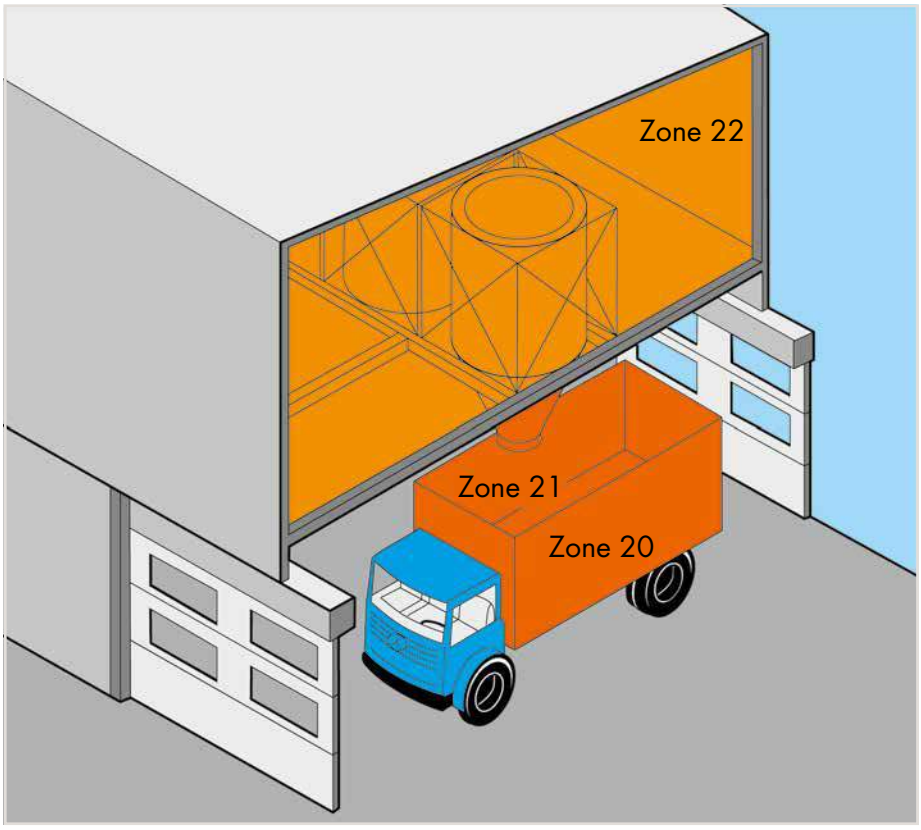

Hazardous areas due to explosive dust/air mixtures:

Zone 20:

Areas in which an explosive atmosphere due to dust/air mixtures is present continuously, for long periods or frequently and in which dust deposits of known or excessive thickness may form. Dust deposits alone do not constitute a Zone 20.

Zone 21:

Areas in which the occurrence of an explosive atmosphere due to dust/air mixtures is to be expected occasionally and in which deposits or layers of combustible dust can generally be present.

Zone 22:

Areas in which an explosive atmosphere due to dust/air mixtures is not likely to occur during normal operation and, if it occurs, will only exist for a short period, or in which accumulations or layers of combustible dust are present.

EN 60079-0 also classifies electrical equipment for use in hazardous areas into two groups:

Group I:
Electrical equipment for mines susceptible to firedamp

Group II:
Electrical equipment for hazardous areas, except for mines susceptible to firedamp.

As this broad application range encompasses a large number of potentially flammable gases, Group II is broken down into subgroups IIA, IIB and IIC.
This breakdown is based on different gases/materials exhibiting differing ignition power levels as parameters. Therefore, representative gases have been allocated to these three sub-groups:
- IIA – Propane
- IIB – Ethylene
- IIC – Hydrogen

Publication of the WBK Mining Authority dated March 1989.
Quote: " ... terminal blocks that have been certified for the type of protection Ex e II will also be accepted, for example, for Group I – equipment with "e" (increased safety) protection type."

This information is also given under Item 12 in the EC Prototype Test Certificates, based on which the terminal blocks have been approved for Group I and Group II.

Temperature Class	Maximum Surface Temperature (°C)
T1	450
T2	300
T3	200
T4	135
T5	100
T6	85

Depending on the maximum surface temperature, electrical equipment in Group II are classified in temperature categories T1 to T6 for all protection types. The ambient temperature, which must be accounted for in dimensioning, is defined as 40 °C/104 °F (deviations are acceptable under some conditions).
Terminal blocks for "e" (increased safety) protection type are generally assigned to temperature category T 6. When rail-mount terminal blocks are used in equipment of temperature categories T1 to T5, ensure that the highest temperature on the insulating parts does not exceed 85 °C (185 °F). The highest measured surface temperature rise must not exceed 40 K.

Thermal resistance of the insulation material must be at least 20 °C (68 °F) greater than the highest operating temperature. Low temperature stability is considered to be sufficient when the insulation material can withstand 24-hour storage at a temperature of −60 °C (−76 °F) without nullifying the type of protection.

Special Requirements "Increased Safety Ex e"
The European EN 60079-7 Standard – VDE 0170-6 Classification – contains special requirements for the design and testing of electrical equipment with "e" (increased safety) protection type for use in hazardous areas.
This standard is a supplement to EN 60079-0 and applies to equipment or parts thereof that neither generate sparks or arcing under normal operating conditions, nor exhibit hazardous temperatures.
This standard describes special measures, which have to be observed to obtain a safety degree according to the "e" (increased safety) protection type.
Ex components such as rail-mount terminal blocks are covered by Section 4.2 "Terminal Blocks for External Conductors."
The following are the most important design requirements for terminal blocks for external supply conductors to electrical equipment:
These must:
- be sufficiently large to permit reliable connection of external supply conductors with cross-section of at least the size required by the nominal current of the equipment
- be protected against self-loosening and designed such that the supply conductors cannot slip out of their clamping units
- be designed such that adequate contact pressure is ensured without damaging the conductors
- be designed such that their contact pressure does not change with temperature cycling
- be equipped with a spring connecting link for the connection of stranded conductors
- be designed so as to allow secure connection of smaller conductors for terminal blocks up to 4 mm² (12 AWG).

Minimum Ignition Power of Typical Gases:

Explosion Group	I	IIA	IIB	IIC
Gas	Methane	Propane	Ethylene	Hydrogen
Ignition Power	280	250	82	16

The following table shows a comparison between the current practice based on ElexV, DIN VDE 0165: 1991 and the new EN 1127-1:

Device Group II				
Category	Protection degree	Adequate safety for	Comparable to current practice	New, per EN 1127
1: Ex atmosphere is very probable, swirled dust	Highest	Two protective measures Two faults	Group II Zone 0 Zone 10	Zone 0, Zone 20
2: Occasional Ex atmosphere	Increased	Equipment failure or fault	Group II, Zone 1	Zone 1 Zone 21
3: Low probability of Ex atmosphere, settled dust	Normal	Fault-free operation	Group II, Zone 2 Zone 11	Zone 2 Zone 22

General Technical Information on Electrical Equipment Used in Hazardous Areas

(continued)

It is expressly prohibited to use insulating parts for transferring contact forces. Terminal blocks with sharp edges which could damage supply lines and those types that can be rotated, turned or permanently deformed when fixed in place are not permitted for use. Terminal blocks for internal connections in electrical equipment must not be subjected to excessive mechanical stress. These items must fulfill the requirements for terminal blocks used for external supply conductors.

Clearances between conductive parts having different potentials must be at least 3 mm for external connections, as specified in Table 1.

The value of the creepage distances depends on the working voltage, surface geometry of the insulating parts and tracking resistance of the insulation material. Grooves on the surface may only be considered if they are at least 2.5 mm deep and wide; ribs on the surface only if their height is at least 2.5 mm and their width corresponds to the mechanical strength of the material, however not smaller than 1 mm.

Table 1: Creepage Distances and Clearances

Voltage[1] RMS Value for AC or DC Voltage	Minimum Creepage Distance (in mm)			Minimum Clearance
	Material Group			
V	I	II	III a	mm
10[2]	1.6	1.6	1.6	1.6
12.5	1.6	1.6	1.6	1.6
16	1.6	1.6	1.6	1.6
20	1.6	1.6	1.6	1.6
25	1.7	1.7	1.7	1.7
32	1.8	1.8	1.8	1.8
40	1.9	2.4	3	1.9
50	2.1	2.6	3.4	2.1
63	2.1	2.6	3.4	2.1
80	2.2	2.8	3.6	2.2
100	2.4	3	3.8	2.4
125	2.5	3.2	4	2.5
160	3.2	4	5	3.2
200	4	5	6.3	4
250	5	6.3	8	5
320	6.3	8	10	6
400 (440)*)	8	10	12.5	6
500 (550)*)	10	12.5	16	8
630 (690)*)	12	16	20	10
800	16	20	25	12
1000	20	25	32	14
1250	22	26	32	18
1600	23	27	32	20
2000	25	28	32	23
2500	32	36	40	29
3200	40	45	50	36
4000	50	56	63	44
5000	63	71	80	50
6300	80	90	100	60
8000	100	110	125	80
10000	125	140	160	100

[1] The listed voltages are taken from IEC 60664-1. The working voltage *) may exceed the voltage indicated in the table by 10 %. This is based on the simplification of the supply voltages in accordance with Table 3b for IEC 60664-1.
The listed values for creepage distances and clearances are based on a maximum limit deviation for supply voltage of ± 10 %.

[2] CTI values are not applicable for voltages of 10 V or less. Materials that do not meet the requirements of material group III a can be used.

Classification of insulation materials according to their tracking resistance is based on their Comparative Tracking Index (CTI) and is defined in Table 2 as follows:

This classification applies to insulating parts without ribs or grooves.

If the insulating parts have ribs or grooves sufficiently large to be considered, the minimum creepage distances must be set according to values for the insulation materials in the next-higher level (e.g., Group I, instead of Group II).

Accounting for the ambient temperature of 40 °C (104 °F) specified for electrical equipment, the current-carrying capacity of rubber-insulated conductors is reduced to 82 %, based on DIN VDE 0298-4:2013-06, Table 12 and to 87 % for PVC-insulated conductors for the current-carrying capacity defined for 30 °C (86 °F) in accordance with Item 4.3.3 in DIN VDE 0298-4:2013-06.

Table 2: Tracking Resistance for Insulation Materials

Material Group	Comparative Tracking Index
I	600 ≤ CTI
II	400 ≤ CTI < 600
III a	175 ≤ CTI < 400

Conductor Types and Conductor Preparation

In accordance with EN 60079-14/DIN VDE 0165-1, the ends of stranded and fine-stranded conductors must be protected against splaying (e.g., via cable lugs or ferrules) or by the type of terminal blocks used. Soldering alone is not sufficient.

According to EN 60069-7/DIN VDE 0170-6, connecting electrical equipment to terminal blocks having an "e" (increased safety) protection type must not lead to a reduction of the clearances and creepage distances.

Based on experience through the application of terminal blocks in aggressive atmospheres in the chemical industry, WAGO recommends gas-tight tinned copper ferrules or tinned copper pin terminals when connecting fine-stranded conductors to terminal blocks in corrosive atmospheres.

Approvals

Terminal blocks may be used in Zones 1 and 2, provided that the terminal blocks are accommodated in an enclosure that has a minimum IP54 protection and an Ex e certification.
Terminal blocks are considered to be Ex components, because they are a part of the equipment. Part certificates provided by Ex Certification Agencies serve as a basis for issuing the complete conformity declaration for the unit.
An EC-type examination certificate is issued in accordance with the 2014/34/EU ATEX Directive.
In addition, an IEXEx Certificate may also be obtained from an appropriate, recognized certification agency in accordance with the IECEx Certification Agreement that is accepted throughout Europe and also in countries such as Canada, China and Australia.
These certificates can also be viewed at: www.iecex.com.

Terminal block marking per 2014/34/EU ATEX Directive:

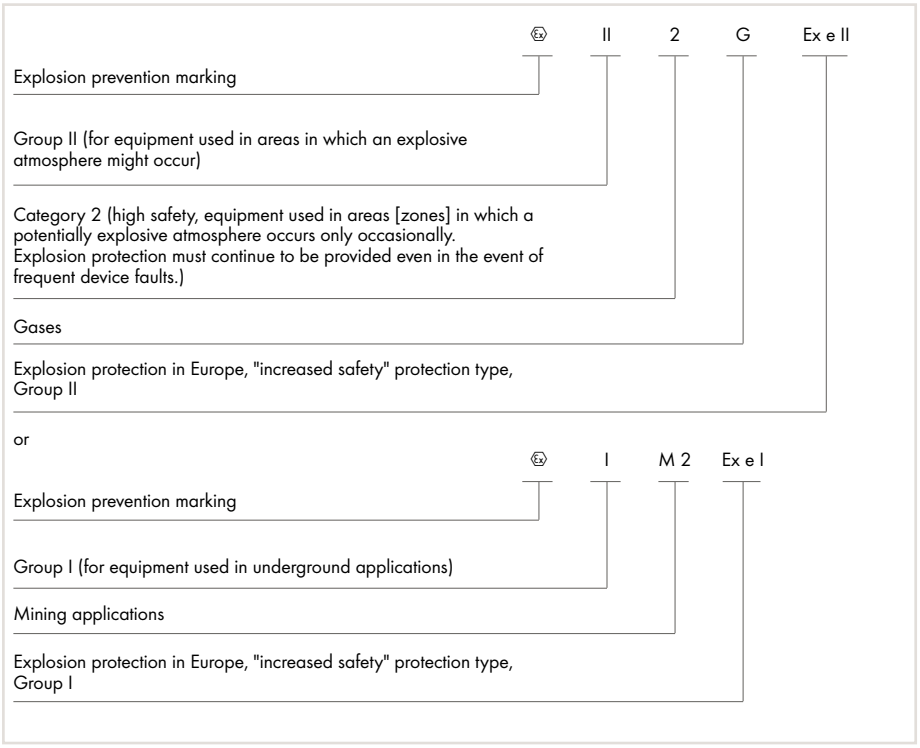

Example of marking (rear):

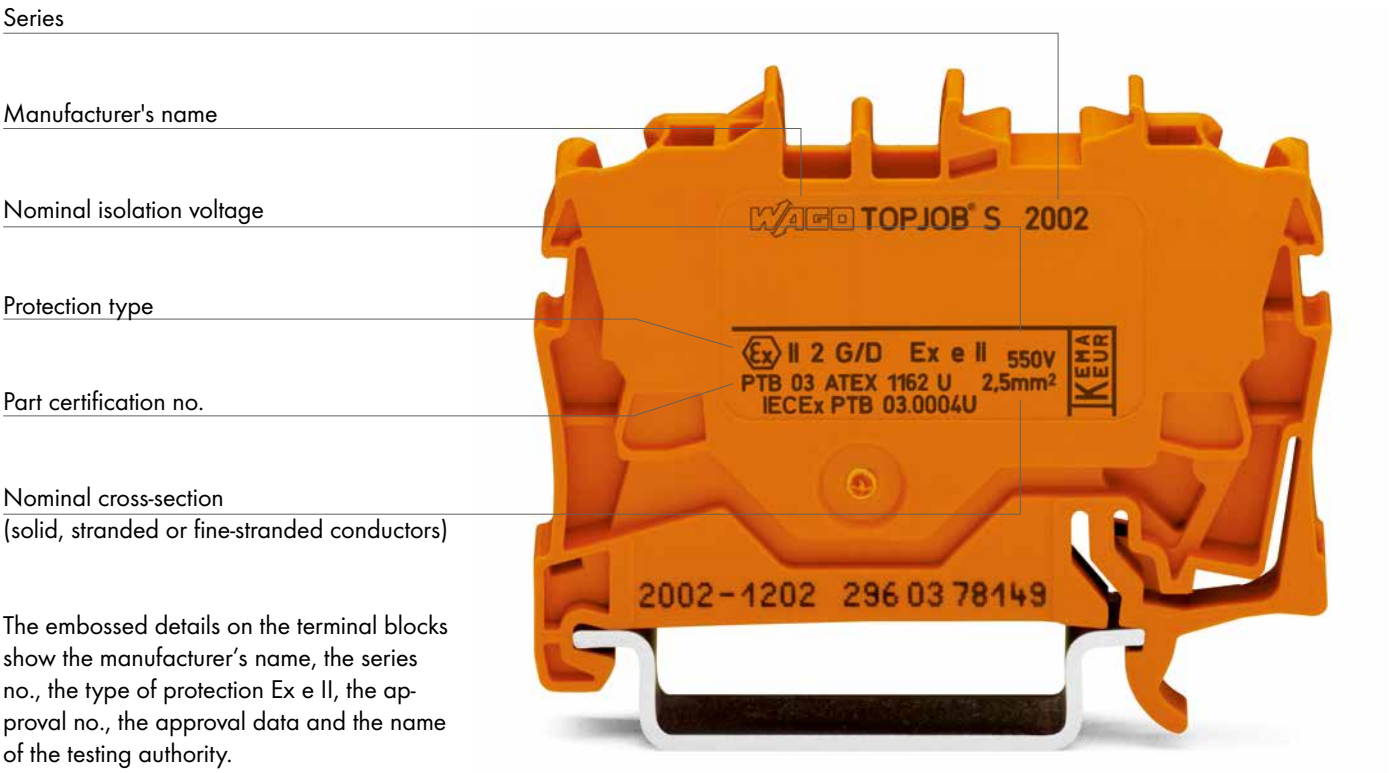

The embossed details on the terminal blocks show the manufacturer's name, the series no., the type of protection Ex e II, the approval no., the approval data and the name of the testing authority.

General Technical Information on Electrical Equipment Used in Hazardous Areas

(continued)

Terminal blocks for Class I, Zone 1, Ex e II hazardous locations can be approved for Ex applications per UL 60079-7 standard. As a result of international harmonization efforts, the UL certificate can be issued on the basis of EN 60079-0 or EN 60079-7 standards, provided that the terminal blocks have also been approved per UL 1059 (ordinary location).

If desired by the applicant, terminal blocks can simultaneously be approved in accordance with the Canadian Standards E79-0-95 and E79-7-95 and released for use in Canada.
The terminal blocks are marked with c UL us Cl. I, Zn. 1, AExI, Zn. 1, AEx e II.

EC-type examination certificates have been granted to all WAGO terminal blocks listed in this catalog.
WAGO terminal blocks approved for use in Ex e II areas are manufactured of flame-resistant, self-extinguishing Polyamide 66. The same applies to the terminal blocks used in non-hazardous areas. Tracking resistance with a CTI value of 600 as per IEC 60112 and a constant operating temperature of 105 °C (22 °F) in accordance with IEC 60216-1 and -2 are provided.
Factory part quality tests are performed on all CAGE CLAMP® rail-mount terminal blocks with Ex e II approval to monitor and ensure the quality features described above.

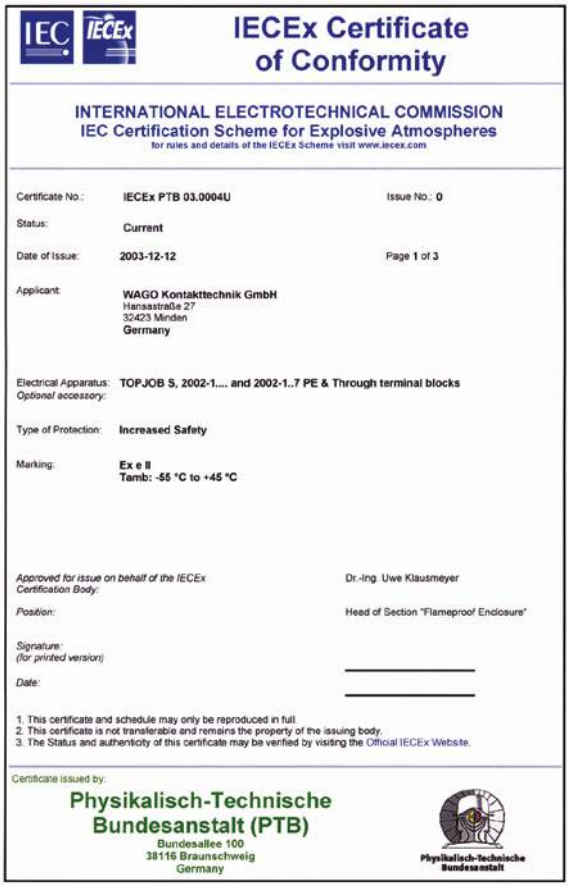

IECEx Certificate of Conformity

INTERNATIONAL ELECTROTECHNICAL COMMISSION
IEC Certification Scheme for Explosive Atmospheres
for rules and details of the IECEx Scheme visit www.iecex.com

Certificate No.: IECEx PTB 03.0004U — Issue No.: 0
Status: Current
Date of Issue: 2003-12-12 — Page 1 of 3

Applicant: WAGO Kontakttechnik GmbH
Hansastraße 27
32423 Minden
Germany

Electrical Apparatus: TOPJOB S, 2002-1.... and 2002-1..7 PE & Through terminal blocks
Optional accessory:

Type of Protection: Increased Safety

Marking: Ex e II
Tamb: -55 °C to +45 °C

Approved for issue on behalf of the IECEx Certification Body: Dr.-Ing. Uwe Klausmeyer
Position: Head of Section "Flameproof Enclosure"
Signature: (for printed version)
Date:

1. This certificate and schedule may only be reproduced in full.
2. This certificate is not transferable and remains the property of the issuing body.
3. The Status and authenticity of this certificate may be verified by visiting the Official IECEx Website.

Certificate issued by:
Physikalisch-Technische Bundesanstalt (PTB)
Bundesallee 100
38116 Braunschweig
Germany



Physikalisch-Technische Bundesanstalt
Braunschweig und Berlin

(1) EG-Baumusterprüfbescheinigung

(2) Geräte und Schutzsysteme zur bestimmungsgemäßen Verwendung in explosionsgefährdeten Bereichen Richtlinie 94/9/EG

(3) EG-Baumusterprüfbescheinigungsnummer
PTB 05 ATEX 1030 U

(4) Komponente: Durchgangsklemmen Typ TOPJOB S Baureihe 2005-12 und 2005-13 Schutzleiterklemmen Typ TOPJOB S Baureihe 2006-1207 und 2006-1307

(5) Hersteller: WAGO Kontakttechnik GmbH

(6) Anschrift: Hansastraße 27, 32423 Minden, Deutschland

(7) Die Bauart dieser Komponente sowie die verschiedenen zulässigen Ausführungen sind in der Anlage und den dem aufgeführten Unterlagen zu dieser Baumusterprüfbescheinigung festgelegt.

(8) Die Physikalisch-Technische Bundesanstalt bescheinigt als benannte Stelle Nr. 0102 nach Artikel 9 der Richtlinie des Rates der Europäischen Gemeinschaften vom 23. März 1994 (94/9/EG) die Erfüllung der grundlegenden Sicherheits- und Gesundheitsanforderungen für die Konzeption und den Bau von Geräten und Schutzsystemen zur bestimmungsgemäßen Verwendung in explosionsgefährdeten Bereichen gemäß Anhang II der Richtlinie.
Die Ergebnisse der Prüfung sind in dem vertraulichen Prüfbericht PTB Ex 05-15105 festgehalten.

(9) Die grundlegenden Sicherheits- und Gesundheitsanforderungen werden erfüllt durch Übereinstimmung mit
EN 60079-0:2004 EN 60079-7:2003 EN 60281-1-1:1999

(10) Das Zeichen "U" hinter der Zertifikatsnummer gibt an, dass dieses Zertifikat nicht in Verbindung mit einem Gerät oder Schutzsystem vorgesehenen Zertifikat verwechselt werden kann. Diese Teilbescheinigung darf nur als Basis für die Bescheinigung eines Gerätes oder Schutzsystems verwendet werden.

(11) Diese EG-Baumusterprüfbescheinigung bezieht sich nur auf Konzeption und Prüfung der festgelegten Komponente gemäß Richtlinie 94/9/EG. Weitere Anforderungen dieser Richtlinie gelten für die Herstellung und das Inverkehrbringen dieser Komponente. Diese Anforderungen werden nicht durch diese Bescheinigung abgedeckt.

(12) Die Kennzeichnung der Komponente muß die folgenden Angaben enthalten:
Ex II 2 G Ex e II bzw. I M2 Ex e I und Ex II 2 D

Zertifizierungsstelle Explosionsschutz
Im Auftrag
Dr.-Ing. U. Klausmeyer
Direktor und Professor

Braunschweig, 30. Mai 2005

Seite 1/3

EG-Baumusterprüfbescheinigungen ohne Unterschrift und ohne Siegel haben keine Gültigkeit.
Diese EG-Baumusterprüfbescheinigung darf nur unverändert weiterverbreitet werden.
Auszüge oder Änderungen bedürfen der Genehmigung der Physikalisch-Technischen Bundesanstalt.
Physikalisch-Technische Bundesanstalt • Bundesallee 100 • D-38116 Braunschweig

14

Classifications per NEC 500

The following classifications, as defined in article 500 of the National Electric Code (NEC), are valid for North America.

Divisions

Divisions describe the degree of probability for a dangerous situation occurring. The following assignments apply:

Hazardous Areas due to Flammable Gases, Vapors, Mists or Dusts	
Division 1	Areas in which an explosive atmosphere is likely to occur occasionally (> 10 h ≤ 1000 h/year), as well as continuously or long-term (> 1000 h/year).
Division 2	Areas in which an explosive atmosphere is likely to occur rarely or only for a short period (> 1 h ≤ 1 h /year).

Explosion Protection Groups

Electrical components for explosive areas are subdivided in three danger categories:

Class I (gases and fumes)	Group A Group B Group C Group D	(Acetylene) (Hydrogen) (Ethylene) (Methane)
Class II (dust)	Group E Group F Group G	(Metal dust) (Coal dust) (Flour, starch and cereal dusts)
Class III (fibers)	No subgroups	

Temperature Classes

Electrical components for hazardous areas are differentiated by temperature classes:

Temperature Class	Maximum Surface Temperature	Ignition Temperature of Combustible Materials
T1	450 °C	> 450 °C
T2	300 °C	> 300 °C ≤ 450 °C
T2A	280 °C	> 280 °C ≤ 300 °C
T2B	260 °C	> 260 °C ≤ 280 °C
T2C	230 °C	> 230 °C ≤ 260 °C
T2D	215 °C	> 215 °C ≤ 230 °C
T3	200 °C	> 200 °C ≤ 215 °C
T3A	180 °C	> 180 °C ≤ 200 °C
T3B	165 °C	> 165 °C ≤ 180 °C
T3C	160 °C	> 160 °C ≤ 165 °C
T4	135 °C	> 135 °C ≤ 160 °C
T4A	120 °C	> 120 °C ≤ 135 °C
T5	100 °C	> 100 °C ≤ 120 °C
T6	85 °C	> 85 °C ≤ 100 °C

General Technical Information on Electrical Equipment Used in Hazardous Areas

(continued)

For America

Per NEC 500

Side Marking I/O Modules
(e.g., 750-400, 2-Channel Digital Input Module, 24 VDC):

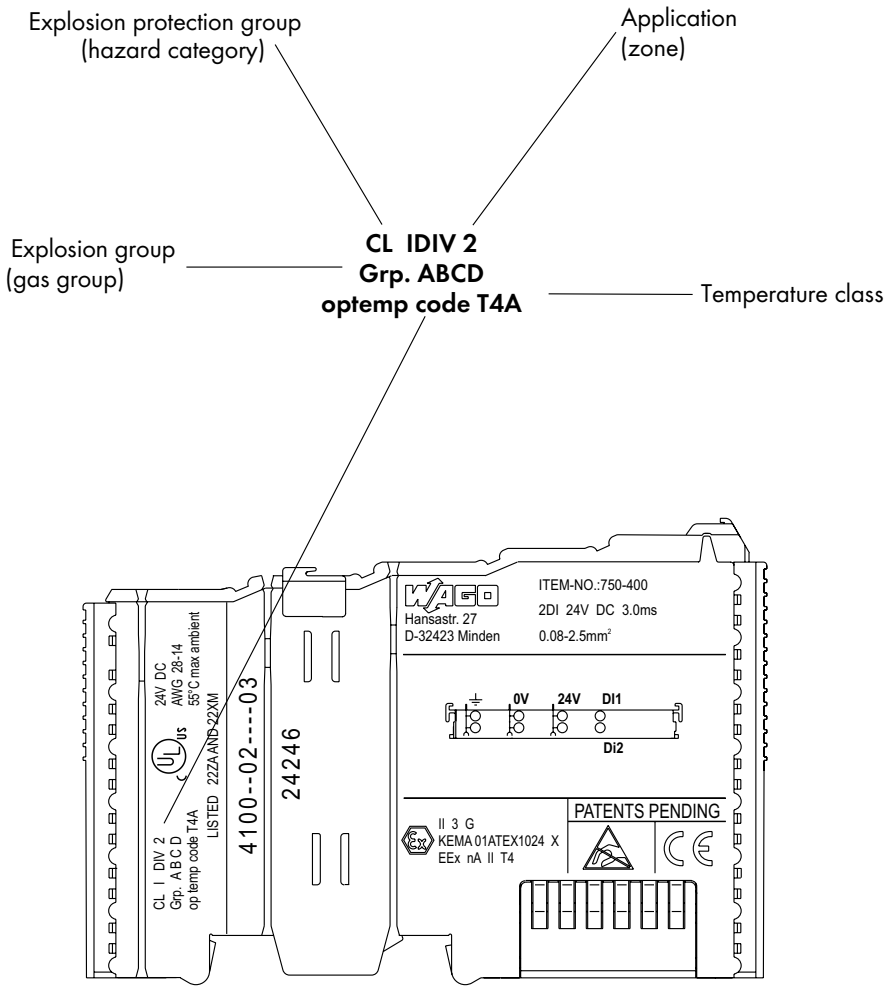

Special Requirements "Intrinsic safety Ex i"

The European EN 60079-11 Standard – DIN EN 60079-11 Classification (VDE 0170-7) – contains special requirements for the design and testing of electrical equipment with "i" (intrinsic safety) protection type for use in hazardous areas.

A circuit is "intrinsically safe" when, under normal operating conditions and in the event of specific fault conditions, no sparks or thermal effects can occur and cause the ignition of a certain explosive atmosphere.

A distinction is made here between:
- intrinsically safe electrical equipment when all circuits are intrinsically safe and
- associated electrical equipment including both intrinsically and non-intrinsically safe circuits, and being designed such that the non-intrinsically safe circuits cannot affect the intrinsically safe ones.

Intrinsically safe electrical equipment and intrinsically safe parts of associated electrical equipment are classified at "ia" or "ib" protection level.
Electrical equipment classified Ex "ia" must not ignite when current is applied in the following cases:
a) During fault-free operation, with those non-discreet faults present that result in the most adverse condition;
b) During fault-free operation and with a discreet fault, plus those non-discreet faults that result in unfavorable conditions;
c) During fault-free operation with two discreet faults, plus those non-discreet faults that result in the most adverse conditions.

Electrical equipment classified Ex "ib" must not ignite when current is applied in the following cases:
a) During fault-free operation, with those non-discreet faults present that result in the most adverse condition;
b) During fault-free operation and with a discreet fault, plus those non-discreet faults that result in unfavorable conditions.

No special approval is required for terminal blocks used as simple electrical equipment for "Ex i" protection type, as they do not contain a voltage source and precise information is available concerning electrical data and temperature rise performance.
The terminal blocks must be identifiable, for example by their type designation, and the following design requirements must also be upheld:
- The clearance between bare, conducting parts of terminal blocks of different intrinsically safe circuits has to be equal or higher than the values specified in the standard. In addition, clearances between the terminal blocks must be so that the clearances between the bare, conductive parts of the connected external conductors is at least 6 mm when measured. Each possible motion of metallic parts that are not rigidly secured must be considered.
- When a possible connection has not been considered during safety analysis, the minimum clearance between grounded metallic or other conducting parts and the uninsulated conducting parts of the conductors that are connected to the terminal blocks must be 3 mm.
- Terminal block marking must be unique and clearly visible. If a color is used for this, the color must be light blue (similar to RAL 5015).

Note also when using terminal blocks:
Terminal blocks used for intrinsically safe circuits must be isolated from those used in non-intrinsically safe circuits. This is accomplished by several accepted methods. First, intrinsically safe circuits are separated by at least 50 mm of air space from non-intrinsically safe circuits.

Second, intrinsically safe circuits are housed in a separate enclosure. Third, intrinsically safe terminal blocks are separated from non-intrinsically safe terminal blocks by either an insulated partition or grounded metal partition. The partition size must allow for either 1.5 mm or less distance from the sides of the housing or provide at least 50 mm of creepage distance between the intrinsically and non-intrinsically safe circuits in all directions.
The insulation between an intrinsically safe circuit and the chassis of an electrical equipment or parts, which may be grounded, has to withstand an effective AC voltage corresponding to double the value of the voltage of the intrinsically safe circuit or a minimum of at least 500 V, depending on which value is higher.
The insulation between an intrinsically safe and a non-intrinsically safe circuit has to withstand an effective AC voltage of 2 x nominal value (U) +1000 V or a minimum of 1500 kV, whereby U represents the total of the effective voltages of the intrinsically safe and the non-intrinsically safe circuit.
Short circuit between different intrinsically safe circuits could cause dangerous conditions. The insulation between these circuits should withstand an effective voltage of at least 500 VAC or 2 UAC where U is the total of the effective voltages of the related circuits.
In accordance with EN 60079-14/ DIN VDE 0165-1, in intrinsically safe circuits, the ends of stranded and fine-stranded conductors must be protected against splaying (e.g., via cable lugs or ferrules) or by the type of terminal blocks used. Soldering alone is not sufficient.
WAGO recommends gas-tight tinned copper ferrules or tinned copper pin terminals when connecting fine-stranded conductors to terminal blocks in corrosive atmospheres.

General Technical Information on Electrical Equipment Used in Hazardous Areas
(continued)

IECEx and ATEX 100a Approvals

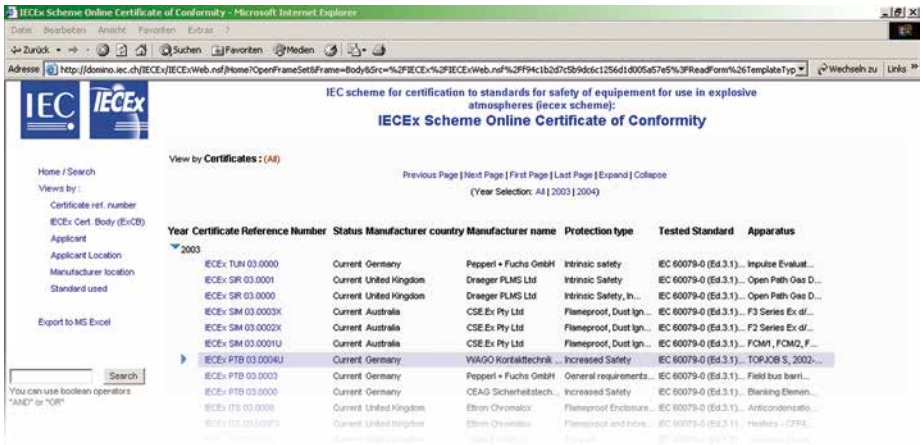

TOPJOB® S Rail-Mount Terminal Blocks

The IECEx certificate awarded to WAGO for the TOPJOB® S Rail-Mount Terminal Blocks (Approval No. IECEx PTB 03.0004U), which first debuted at the Hannover Fair 2003, is one of the first ten certificates that have been issued worldwide so far. It is the fourth certificate of this type (Reference No. ...0004U) that has been published online by the German certification body PTB in Braunschweig (publication dated December 15, 2003). These rail-mount terminal blocks are also certified for use in Ex e applications per ATEX 100 a. Both approvals are available for all through terminal blocks, as well as ground conductor terminal blocks.

They provide major cost savings and simplicity to WAGO customers:

- Double inventories are no longer necessary for standard and Ex e rail-mount terminal blocks.
- The time-, cost- and space-saving features of the system can automatically apply to Ex e applications.
- Project planning is essentially performed using a single range of rail-mount terminal blocks.
- Enhanced plant safety: Standard terminal blocks cannot be accidentally used in Ex e areas.
- The IECEx certificate is valid for the international trade of Ex equipment.

Other WAGO products with IECEx approval are available upon request.

International Certification Organizations – Overview

	Abbreviation
Underwriters Laboratories **USA** http://www.ul.com	**UL**
Underwriters Laboratories **USA** http://www.ul.com	**UL**
Underwriters Laboratories **USA** http://www.ul.com	**cURus**
Underwriters Laboratories **USA** http://www.ul.com	**cULus**
Canadian Standards Association **Canada** http://www.csa.ca	**CSA**
VDE-Gutachten mit Fertigungsüberwachung **Germany** http://www.vde.de/vde/html/e/home.htm	**VDE**
VDE – Deutscher Verband für Elektrotechnik **Germany** http://www.vde.de	
VDE – Prüfbericht **Germany**	
Österreichischer Verband für Elektrotechnik **Austria** http://www.ove.at	**ÖVE**
Schweizerischer Elektrotechnischer Verein **Switzerland** http://www.sev.ch/	**SEV**
N.V. tot Keuring van Elektrotechnische Materialien **Netherlands** http://www.kema.nl	**KEMA**
CENELEC CERTIFICATION AGREEMENT **N.V. tot Keuring van Elektrotechnische Materialien** **Netherlands** http://www.cenelec.org	**CCA Appr. No. with NL**
Norges Elektriske Materialkontroll **Norway** http://express.nemko.com	**NEMKO**
Svenska Elektriska Materielkontrollanstalten AB **Sweden** http://www.semko.com	**SEMKO**

	Abbreviation
Danmarks Elektriske Materielkontrol **Denmark** http://www.demko.dk	**DEMKO**
CENELEC CERTIFICATION AGREEMENT **Danmarks Elektriske Materielkontrol** **Denmark** http://www.cenelec.org	**CCA Appr. No. with NL**
SETI – FEMKO Sähkötarkastuskeskus Elinspecktionscentralen **Finland** http://www.seti.fi	
Sähkötarkastuskeskus Elinspecktionscentralen **Finland** http://www.fimko.com	**FIMKO**
South African Bureau of Standards **South Africa** http://www.sabs.co.za	**SABS**
RosTesT **Russia** http://www.rostest.ru	**ROTEST**
Departamentul Moldovastandard **Moldova** http://www.moldova.md/ro/government/oll/D_STAND/en/strcent2.htm	**CSM**
Certificate of Registration **Great Britain** http://www.astacertification.com	**ASTA**
Rheinisch-Westfälischer Technischer Überwachungsverein e.V. **Germany** http://www.rwtuv.de	**RWTüv**
Elektrotechnick´y v´yskumn´y a projektov´y ústav **Czech Republic** http://www.ezu.cz	**EZU**
Stowarzyszenie Elektrykow Polskich **Poland** http://www.sep.com.pl	**BBJ**
Stowarzyszenie Elektrykow Polskich **Poland** http://www.bbj.pl	**SEP**

	Abbreviation
CNET Centre National d'Etudes des Télécommunications **France** http://www.lannion.cnet.fr	**CNET**
LCIE Laboratoire Central des Industries Electriques **France** http://www.lcie.fr	**LCIE**
Fyzikálne Technick´yZkusební Ústav, Ostrava-Radvanice **Czech Republic** http://www.ftzu.cz	**FTZU**
Marine Approvals	
Germanischer Lloyd **Germany** http://www.gl-group.com	**GL**
BV Bureau Veritas **France** http://www.bureauveritas.fr	**BV**
Lloyd's Register of Shipping **Great Britain** http://www.lloydsregister.com	**LR**
NV – Det Norske Veritas **Norway** http://www.dnv.com	**DNV**
Russian Maritime Register of Shipping **GUS** http://www.rs-head.spb.ru	**RMR**
Polski Rejestr Statków **Poland** http://www.prs.pl	**PRS**
Korean Register of Shipping **Korea** http://www.krs.co.kr	**KR**
ABS American Bureau of Shipping **USA** http://www.eagle.org	**ABS**

	Abbreviation
Robbanásbiztos Villamos Berendezések **Hungary** http://www.bki.hu	**BKI**
CB **CB – TEST CERTIFICATE** **India** http://www.ul-europe.com	**CB**
CB **CB – TEST CERTIFICATE** **China** http://www.ul-europe.com	**CB**
UL-International Demko A/S **Denmark** http://www.ul-europe.com	**ENEC**
Ex Approvals	
Physikalisch Technische Bundesanstalt **Germany** **Ex e II** http://www.ptb.de	**PTB**
Underwriters Laboratories **USA** http://www.ul.com	**cURus-EX**
N.V. tot Keuring van Elektrotechnische Materialien **Netherlands** http://www.kemaquality.com	**KEMA-EX**
GOSENERGO-Ex GOSENERGONADZOR **Russia**	**GOSENERGO-EX**
Fyzikálne Technick´y Zkusební Ústav, Ostrava-Radvanice **Czech Republic** http://www.ftzu.cz	**FTZU**
Robbanásbiztos Villamos Berendezések **Hungary** http://www.bki.hu	**BKI-Ex**



Index and Addresses

Indexes
Addresses

	Page
Product Index	658
Item Number Index	662
WAGO Worldwide	680

Product Index

Item	Page
A	
Actuator and actuator LED terminal blocks	
– Rail-mount terminal blocks, TOPJOB® S	104
– Rail-mount terminal blocks, Classic	305
– Rail-mount terminal blocks	427
Additional modules for matrix patchboards	510
"Alu-Plus" contact paste	637
Angled support bracket	590
Assembly tool for 294 Series	480
B	
Banana plugs	330
Busbar terminal blocks	521
Busbar carriers	561
C	
Cable cutter	603
Cable strippers	598
CAGE CLAMP® connection	2
Carrier rails	590
Carrier terminal blocks, f.-e.	286
– as double-, triple-deck terminal blocks	242
– TOPJOB® S	56
– Multilevel installation terminal blocks, TOPJOB® S	192
– X-COM®S-SYSTEM-MINI	150
– X-COM®S-SYSTEM	166
– X-COM®-SYSTEM	342
CE marking	610
Certification Organizations – Overview	654
Chassis-mount terminal strips	462
CLASSIC splicing connectors for all conductor types	543
Collective jumper carriers	591
– TOPJOB® S	137
Compact terminal blocks	
– see "Mini (rail-mount) terminal blocks"	
Common potential and matrix patching terminal blocks (4- and 8-level terminal blocks)	515
Common potential matrix patchboards	506
Compact terminal blocks	462
Compact terminal strips	432
COMPACT PUSH WIRE® connectors for junction boxes	525
COMPACT splicing connectors for all conductor types	537
Component plugs	126
Comb-style jumper bars	332
Connection cables	3
Covers for rail-mount terminal blocks	593
Crimping tools for ferrules	600
Current-carrying capacity curves	
– X-COM®-SYSTEM	400
D	
Decade marker carrier	510
Delta jumper	135
Derating curves	
– see "Current-carrying capacity curves"	
Diode double-deck terminal blocks, f.-e.	318
– TOPJOB® S	116
Diode modules, for carrier or through terminal blocks, pluggable	322
– TOPJOB® S	120
Diode terminal blocks, f.-e.	312
– TOPJOB® S	110
Diode triple-deck terminal blocks, f.-e.	420
– TOPJOB® S	118
Disconnection tool for 294 Series	481
Disconnect and test terminal blocks, f.-e.	
– angled type	
– for transformer circuits	274
– TOPJOB® S	92
– horizontal type	
– with a pivoting knife disconnect	260
– TOPJOB® S	64
– with a disconnect tab	262
Disconnect and test terminal blocks, s.-e.	494

Item	Page
D	
Disconnect terminal blocks, f.-e.	
– angled type	
– for transformer circuits	270
– Double-deck terminal blocks, TOPJOB® S	56
– horizontal type	
– with a pivoting knife disconnect	260
– TOPJOB® S	64
– with a disconnect tab	262
– Double-deck terminal blocks	241
Distribution terminal blocks, f.-e.	233
– TOPJOB® S	198
– TOPJOB® S multilevel installation terminal blocks	Section 3
Double-potential terminal blocks, f.-e.	219
– TOPJOB® S	29
– as terminal blocks for matrix patching	519
Double-deck rail-mount terminal blocks, f.-e.	236
– X-COM®-SYSTEM, carrier terminal blocks	372
– X-COM®S-SYSTEM-MINI, carrier terminal blocks	152
– X-COM®S-SYSTEM, carrier terminal blocks	168
– TOPJOB® S	42
– TOPJOB® S, disconnect terminal blocks	56
– TOPJOB® S, carrier terminal blocks	56
– TOPJOB® S, fuse terminal blocks	57
– Diode and LED terminal blocks	318
– TOPJOB® S	116
E	
EC directives	611
Electric motor wiring (quadruple-deck) rail-mount terminal blocks	248
– TOPJOB® S	60
End stops	
– for DIN-15 rail	595
– for DIN-35 rail	588
Ex applications:	
– Technical information	642
Ex e II	
– Through terminal blocks, f.-e.	
– angled type	222
– TOPJOB® S	34
– TOPJOB®, Classic	251
– horizontal type	218
– TOPJOB® S	28
– Double- and triple-deck terminal blocks, TOPJOB®	46
– Double-potential terminal blocks, f.-e.	219
– Modular terminal blocks and terminal strips with mounting flanges or snap-in mounting feet	
– f.-e.	436
– s.-e.	442
– Miniature through terminal blocks, f.-e., for DIN-35 and DIN-15 rails	408
– Miniature ground conductor terminal blocks, for DIN-35 and DIN-15 rails	408
Ex i terminal blocks	
– see "Through terminal blocks"	
Ex PUSH WIRE® connectors for junction boxes	530
F	
Felt-tip pen	585
Female plugs	
– X-COM®S-SYSTEM-MINI	154
– X-COM®S-SYSTEM	170
– X-COM®-SYSTEM	392
Ferrules	601
– TOPJOB® S	144
– High-current, rail-mount terminal blocks	605
– 4-conductor, chassis-mount terminal strips	467
Field-wiring terminal blocks	473
Fuse modules, for carrier terminal blocks	286
– TOPJOB® S	96
Fuse plugs, for carrier terminal blocks	286
– TOPJOB® S	96
– for double-/triple-deck terminal blocks	242
– TOPJOB® S	56

Item	Page
F	
Fuse terminal blocks, f.-e.	
– angled type	
– for mini-automotive blade-style fuses	278
– with a pivoting fuse holder	282
– Double-deck terminal blocks, TOPJOB® S	57
– horizontal type	
– TOPJOB® S	70
– with a pivoting fuse holder, TOPJOB® S	72
– for cylindrical fuses	290
Fuse terminal blocks, s.-e.	496
G	
Chassis-mount terminal strips	462
Companies and representatives	
–worldwide	680
Ground conductor disconnect terminal blocks, f.-e.	276
– TOPJOB® S	80
Ground conductor disconnect terminal blocks, s.-e.	495
Ground conductor terminal blocks, f.-e.	
– angled type	222
– TOPJOB® S	34
– TOPJOB®, Classic	251
– for transformer circuits	271
– TOPJOB® S	93
– horizontal type	218
– TOPJOB® S	28
– 5 mm wide; 4 mm²	224
– Double- and triple-deck terminal blocks	236
– TOPJOB® S	42
– Distribution terminal blocks, TOPJOB® S	198
Ground conductor terminal blocks, miniature	
– for DIN-35 and DIN-15 rails	408
Ground conductor terminal blocks, s.-e.	490
– High-current~	204
H	
High-current, rail-mount terminal blocks with POWER CAGE CLAMP connection	Section 4
I	
IEC/EN regulations	611
IEC/EN specifications	611
Installation distribution terminal blocks	
– see "Multilevel installation terminal blocks"	
Insulation stops	
– TOPJOB® S	30
– for rail-mount terminal blocks, Classic	331
– X-COM®-SYSTEM	342
– for matrix patchboards	511
Item Number Index	662
J	
Jumpers for rail-mount terminal blocks	
– see "Step-down jumpers, staggered jumpers, push-in type wire jumpers"	
Junction box connectors	Section 12
L	
L-BOXX® 102	546
Lamp demonstration connectors ("Service" connectors)	549
LED and neon indicator modules, pluggable	324
– TOPJOB® S	120
LED double-deck terminal blocks, f.-e.	318
– TOPJOB® S	116
LED triple-deck terminal blocks, f.-e.	420
– TOPJOB® S	118
LED terminal blocks, f.-e.	312
– TOPJOB® S	110
Lighting connectors	549
Longitudinal switching disconnect terminal blocks	274
Luminaire disconnect connectors	550

Item Page

M

Male connectors
– X-COM®-SYSTEM 382
Male headers
– X-COM®-SYSTEM 386
Marking accessories Section 13, Volume 6
Material specifications for insulation/contact materials, contact plating 638
Matrix patchboards 502
Matrix patching and common potential terminal blocks (4- and 8-level terminal blocks) 514
MICRO PUSH WIRE® connectors for junction boxes 534
Miniature ground terminal blocks, f.-e.
– for DIN-35 and DIN-15 rails 408
Miniature through terminal blocks, f.-e.
– for DIN-35 and DIN-15 rails 408
Modular test plug adapters
– see "Test plug adapters"
Modular terminal blocks and terminal strips
– see "Terminal blocks and terminal strips"
Modular terminal blocks and terminal strips with mounting flanges or snap-in mounting feet 432
– f.-e. 436
– s.-e. 442
Mounting carrier for splicing connectors
– 221 Series 539
– 222 Series 545
– 243 Series 535
– 773 Series 527
– 2273 Series 525
Mounting foot
– for isolated mounting on DIN-rails 589
– for busbars 557
Multilevel installation terminal blocks
– TOPJOB® S 188
Multilevel rail-mount terminal blocks
– see "Double-, triple-, quadruple-deck terminal blocks"
Multilevel terminal blocks
– see "Multilevel installation terminal blocks"
– see "Double-, triple- and quadruple-deck terminal blocks"

N

N-conductor disconnect terminal blocks
– TOPJOB® S 196
– TOPJOB®, Classic 255
Neon lamp modules 324

O

Operating stickers
– see www.wago.com
Operating tools 596
– TOPJOB® S 189
– TOPJOB®, Classic 251
– High-current, rail-mount terminal blocks 208
Order form available upon request

P

Patchboard systems
– Matrix patchboards 502
– Common potential matrix patchboards 506
– Matrix patching and common potential terminal blocks (4- and 8-level terminal blocks) 514
– Terminal blocks for matrix patching (3-conductor, double-potential terminal blocks) 519
Pin modules for rail-mount terminal blocks for Wire-Wrap or Termi-Point connections 519
Pluggable connectors
– TOPJOB® S 128
– X-COM®S-SYSTEM Section 2
– X-COM®-SYSTEM Section 6
Pluggable tap-off modules 423
Push-in type wire jumpers for rail-mount terminal blocks 330
– TOPJOB® S 138
PUSH WIRE® connection 3
POWER CAGE CLAMP connection 3

Item Page

P

Power distribution disconnect terminal blocks
– TOPJOB® S 196
– TOPJOB®, Classic 255
POWER CAGE CLAMP connection Section 4
PUSH WIRE® connection 3
PUSH WIRE® connectors for junction boxes Section 12
PUSH WIRE® connectors for junction boxes, Ex e II 530
PUSH WIRE® connectors for junction boxes, COMPACT 525
PUSH WIRE® connectors for junction boxes, MICRO 534
Push-in CAGE CLAMP® connection 2

Q

Quadruple-deck rail-mount terminal blocks (for fast electric motor wiring) 248
– TOPJOB® S 60

R

Rail end cap for DIN-35 rail 590
Rail-mount spacer blocks 220

S

Sales regions
–worldwide 680
Screwdrivers
– see "Operating tools"
Sensor and sensor LED terminal blocks
– Rail-mount terminal blocks, TOPJOB® S 102
– Rail-mount terminal blocks, Classic 296
– Rail-mount terminal blocks 425
"Service" connectors 549
Shield clamping saddles 556
Shield clamps 560
Shield terminal blocks
– angled type 222
– TOPJOB® S 34
– TOPJOB®, Classic 251
– horizontal type 218
– TOPJOB® S 30
– Double- and triple-deck terminal blocks 43
– Triple-deck terminal blocks 246
– TOPJOB® S 59
Spacers for sensor/actuator terminal blocks 296
Specifications UL – Underwriters Laboratories, USA 632
Splicing connectors, COMPACT, for all conductor types 537
Splicing connectors, CLASSIC, for all conductor types 543
Spring-equipped shield clamping saddles 559
Staggered jumpers for rail-mount terminal blocks 333
– TOPJOB® S 136
Star point jumper 135
Step-down jumpers for through terminal blocks
– TOPJOB® S 41
– High-current, 35 mm² 204
– f.-e. 234
– s.-e. 493
Strain reliefs 481
Strain relief housings
– X-COM®-SYSTEM 399
Strain relief plates
– X-COM®S-SYSTEM 156
– X-COM®-SYSTEM 382
– for 294 Series 481
Subsidiaries and representatives
–worldwide 680
Supply terminal blocks
– Ground conductor terminal block
– TOPJOB® S 198
– TOPJOB®, Classic 254
– N-conductor disconnect terminal blocks
– TOPJOB® S 198
– TOPJOB®, Classic 256

Item Page

T

Tap-off modules 423
Technical information
– general 610
– harzardous areas 642
– miniature fuses 292
Terminal blocks for matrix patching (3-conductor, double-potential terminal blocks) 519
Terminal strips and modular terminal blocks with mounting flanges or snap-in mounting feet 432
– f.-e. 436
– s.-e. 442
Terminating aluminum conductors 637
Test and disconnect terminal blocks
– see "Disconnect and test terminal blocks"
Tests and testing procedures Section 14
Testboy 606
Test pin 150
Test plug adapters
– TOPJOB® S 133
Test plug modules 326
– TOPJOB® S 132
– with CAGE CLAMP® connection 326
– Miniature rail-mount terminal blocks 456
– with Push-in CAGE CLAMP® connection 128
Through terminal blocks, f.-e.
– angled type 222
– TOPJOB® S 28
– TOPJOB®, Classic 251
– for transformer circuits 271
– TOPJOB® S 92
– for fuse terminal blocks for mini-automotive, blade-style fuses 276
– horizontal type 218
– TOPJOB® S 28
– 5 mm wide; 4 mm² 224
– Double- and triple-deck terminal blocks 236
– TOPJOB® S 42
– Distribution terminal blocks 233
– TOPJOB® S 198
Through terminal blocks, Miniature
– for DIN-35 and DIN-15 rails 408
Through terminal blocks, s.-e. 487
– High-current~ 204
Tools Section 13
TOPJOB® terminal blocks with CAGE CLAMP® connection
– Through terminal blocks 251
– Shield terminal blocks 251
– Ground conductor terminal blocks 251
– Tools 251
– N-conductor disconnect terminal blocks 255
– Power distribution disconnect terminal blocks 255
TOPJOB® S terminal blocks with Push-in CAGE CLAMP® connection
– Carrier terminal blocks 56
– Through terminal blocks 28
– Double-potential terminal blocks 29
– Ground conductor terminal blocks 28
– Shield terminal blocks 30
– Double-deck terminal blocks 42
– Triple-deck terminal blocks 58
– Quadruple-deck terminal blocks 60
– Double-deck disconnect/test terminal blocks 56
– Disconnect and test terminal blocks 64
– Fuse terminal blocks 70
– Fuse disconnect terminal blocks with a pivoting fuse holder 72
– Ground conductor disconnect terminal blocks 80
– Terminal block assemblies for transformer circuits 94
– Fuse plugs 96
– Sensor terminal blocks 102
– Actuator terminal blocks 104
– Diode and LED terminal blocks 110
– Pluggable connectors 128
– Test plug modules 132
– Multilevel installation terminal blocks with an N-disconnect slide link 188
– Multilevel installation terminal blocks with an internal N-disconnection 190
– N-conductor disconnect terminal blocks 196
– Power distribution disconnect terminal blocks 196
– Distribution supply terminal blocks 198

f.-e. = front-entry wiring
s.-e. = side-entry wiring

Product Index

Item	Page
T	
Transformer terminal blocks	
– see "Disconnect and test terminal blocks"	
Transverse switching terminal blocks	274
Triple-deck installation terminal blocks, TOPJOB® S	188
Triple-deck rail-mount terminal blocks, f.-e.	246
– TOPJOB® S	58
– Diode and LED terminal blocks	420
– TOPJOB® S	118
U	
UL Specifications – Underwriters Laboratories, USA	632
V	
Variable resistor terminal blocks, f.-e.	317
Vario-T-BOXX	546
Voltage testers	606
W	
WAGO	
– worldwide	680
WAGO CAGE CLAMP® connection	2
WAGO POWER CAGE CLAMP connection	3
WAGO Push-in CAGE CLAMP® connection	2
WAGO PUSH WIRE® connection	3
WFB continuous marking strips	585
Wire harness support	519
Wire jumpers for rail-mount terminal blocks, push-in type	333
– TOPJOB® S	138
Wire strippers	599
X	
X-COM®S-SYSTEM-MINI	
– Carrier terminal blocks	150
– Double-deck carrier terminal blocks	152
– Female plugs with Push-in CAGE CLAMP® connection	154
X-COM®S-SYSTEM	
– Carrier terminal blocks	166
– Double-deck carrier terminal blocks	168
– Female plugs with Push-in CAGE CLAMP® connection	170
X-COM®-SYSTEM	
– Carrier terminal blocks	342
– Double-deck carrier terminal blocks	372
– Female plugs with CAGE CLAMP® connection	392
– Male connectors with CAGE CLAMP® connection	382
– Male headers with solder pins	386

Item	Page

Item	Page

Item	Page

Item Number Index

Item No.	Page
206 Series	
206-105	599
206-118	603
206-124	599
206-125	599
206-126	599
206-127	599
206-128	599
206-170	598
206-171	598
206-173	598
206-174	598
206-203	600
206-204	600
206-210	600
206-213	600
206-216	600
206-225	604
206-250	604
206-294	481
206-804	606
206-810	606
206-816	606
209 Series	
209-100	591
209-105	188
209-106	589
209-107	263
209-108	263
209-109	590
209-112	584
209-113	584
209-114	584
209-120	442
209-122	432
209-123	442
209-128	582
209-129	597
209-130	597
209-132	442
209-137	382
209-140	584
209-141	584
209-142	584
209-143	582
209-144	582
209-145	584
209-170	219
209-173	399
209-174	399
209-183	585
209-184	585
209-185	585
209-190	28
209-191	28
209-192	47
209-196	593
209-290	580
209-500/209-035	502
209-501	399
209-502	502
209-566	502
209-700/209-124	242
209-700/209-125	242
209-700/209-126	242
209-700/209-127	242
209-701	243
209-701/000-002	243
209-701/000-005	243
209-701/000-006	243
209-701/000-007	243
209-701/000-012	243
209-701/000-017	243
209-701/000-023	243
209-701/000-024	243
209-787	242

Item No.	Page
210 Series	
210-103	115
210-110	585
210-111	595
210-112	590
210-113	590
210-114	590
210-115	590
210-118	590
210-123	115
210-136	29
210-137	29
210-141	597
210-143	597
210-148	591
210-149	591
210-154	432
210-196	590
210-197	590
210-198	590
210-254	92
210-281	188
210-295	595
210-296	595
210-297	255
210-331	587
210-332	587
210-333	587
210-333/500-001	586
210-333/500-002	586
210-333/500-003	586
210-333/500-004	586
210-333/500-005	586
210-333/500-006	586
210-333/500-007	586
210-333/500-008	586
210-333/500-009	586
210-333/500-010	586
210-333/500-011	586
210-333/500-021	586
210-333/500-074	586
210-333/500-075	586
210-333/500-076	586
210-333/500-077	586
210-333/500-078	586
210-333/500-079	586
210-333/600-001	586
210-333/600-006	586
210-333/600-007	586
210-333/600-008	586
210-333/600-009	586
210-333/600-010	586
210-333/600-011	586
210-333/600-021	586
210-333/600-074	586
210-333/600-075	586
210-333/600-076	586
210-333/600-077	586
210-333/600-078	586
210-333/600-079	586
210-333/600-103	586
210-333/600-104	586
210-333/600-105	586
210-333/600-106	586
210-333/700-001	586
210-333/700-020	586
210-333/700-021	586
210-333/700-074	586
210-333/700-075	586
210-333/700-076	586
210-333/700-077	586
210-333/700-078	586
210-333/700-079	586
210-333/700-108	586
210-333/700-109	586
210-333/800-001	586
210-333/800-002	586
210-333/800-003	586
210-333/800-004	586
210-333/800-005	586

Item No.	Page
210 Series	
210-333/800-006	586
210-333/800-007	586
210-333/800-008	586
210-333/800-009	586
210-333/800-010	586
210-333/800-011	586
210-333/800-074	586
210-333/800-075	586
210-333/800-076	586
210-333/800-077	586
210-333/800-078	586
210-333/800-079	586
210-333/800-209	586
210-333/1000-001	586
210-333/1000-074	586
210-333/1000-075	586
210-333/1000-076	586
210-333/1000-077	586
210-333/1000-078	586
210-333/1000-079	586
210-333/1000-110	586
210-333/1000-111	586
210-333/1000-112	586
210-333/1000-113	586
210-333/1000-202	586
210-333/1000-204	586
210-333/1000-206	586
210-333/1000-208	586
210-333/1200-001	586
210-333/1200-074	586
210-333/1200-075	586
210-333/1200-076	586
210-333/1200-077	586
210-333/1200-078	586
210-333/1200-079	586
210-333/1200-103	586
210-333/1200-104	586
210-333/1200-105	586
210-333/1200-106	586
210-333/1200-107	586
210-333/1200-203	586
210-334	587
210-335	587
210-345	584
210-412	271
210-413	271
210-414	271
210-415	271
210-423	275
210-424	275
210-490	383
210-504	591
210-505	591
210-506	591
210-508	591
210-549	593
210-612	585
210-647	596
210-648	596
210-657	597
210-658	597
210-719	596
210-720	596
210-721	596
210-722	596
215 Series	
215-111	330
215-211	330
215-212	330
215-311	330
215-411	330
215-511	330

Item No.	Page
215 Series	
215-611	330
215-711	330
215-811	330
215-911	330
216 Series	
216-101	602
216-102	602
216-103	602
216-104	602
216-106	602
216-107	602
216-108	602
216-109	602
216-110	602
216-121	602
216-122	602
216-123	602
216-124	602
216-131	602
216-132	602
216-141	467
216-142	467
216-143	467
216-144	467
216-151	602
216-152	602
216-201	601
216-202	601
216-203	601
216-204	601
216-205	601
216-206	601
216-207	601
216-208	601
216-209	601
216-210	601
216-221	601
216-222	601
216-223	601
216-224	601
216-241	145
216-241	145
216-242	145
216-243	145
216-244	145
216-246	145
216-262	145
216-263	145
216-264	145
216-266	145
216-267	145
216-284	145
216-286	145
216-287	145
216-288	145
216-289	145
216-301	601
216-302	601
216-321	601
216-322	601
216-413	605
216-414	605
216-424	605
216-425	605
216-435	605
216-545	291
216-546	291
216-547	291
221 Series	
221-412	537
221-413	537

Item No.	Page
221 Series	
221-415	537
221-500	539
221-502	541
221-502/000-004	541
221-503	541
221-503/000-004	541
221-505	541
221-505/000-004	541
221-512	541
221-512/000-004	541
221-513	541
221-513/000-004	541
221-515	541
221-515/000-004	541
221-522	541
221-522/000-004	541
221-523	541
221-523/000-004	541
221-525	541
221-525/000-004	541
222 Series	
222-412	543
222-413	543
222-415	543
222-500	545
222-505	539
222-510	539
224 Series	
224-101	549
224-104	549
224-112	549
224-114	549
224-201	549
243 Series	
243-110	535
243-112	535
243-113	535
243-144	535
243-204	534
243-208	534
243-304	534
243-308	534
243-504	534
243-508	534
243-804	534
243-808	534
248 Series	
248-472	580
248-474	580
248-501	580
248-501/000-002	580
248-501/000-005	580
248-501/000-006	580
248-501/000-007	580
248-501/000-012	580
248-501/000-017	580
248-501/000-023	580
248-501/000-024	580
248-502	580
248-503	580
248-504	580
248-505	580
248-506	580
248-566	580
248-569	580
248-570	580
248-571	580

Item No.	Page
248 Series	
248-572	580
248-573	580
249 Series	
249-101	595
249-105	585
249-106	327
249-107	327
249-109	514
249-116	588
249-117	588
249-118	583
249-119	583
249-120	583
249-125	218
249-126	218
249-127	218
249-130	637
249-135	456
249-136	456
249-137	456
249-138	456
249-139	456
249-140	456
249-141	326
249-142	326
249-143	326
249-144	326
249-145	326
249-146	326
249-147	327
249-148	327
249-197	588
260 Series	
260-102	443
260-103	443
260-104	443
260-105	443
260-106	443
260-107	443
260-108	443
260-109	443
260-110	443
260-111	443
260-112	443
260-152	443
260-153	443
260-154	443
260-155	443
260-156	443
260-157	443
260-158	443
260-159	443
260-160	443
260-161	443
260-162	443
260-202	443
260-203	443
260-204	443
260-205	443
260-206	443
260-207	443
260-208	443
260-209	443
260-210	443
260-211	443
260-212	443
260-252	443
260-253	443
260-254	443
260-255	443
260-256	443
260-257	443
260-258	443
260-259	443
260-260	443
260-261	443

Item No.	Page
260 Series	
260-262	443
260-301	442
260-303	442
260-304	442
260-306	442
260-307	442
260-311	442
260-313	442
260-314	442
260-316	442
260-317	442
260-321	442
260-323	442
260-324	442
260-326	442
260-327	442
260-331	442
260-333	442
260-334	442
260-336	442
260-337	442
260-341	442
260-343	442
260-344	442
260-346	442
260-347	442
260-351	442
260-353	442
260-354	442
260-356	442
260-357	442
260-361	442
260-371	442
260-402	442
260-404	442
260-405	442
261 Series	
261-102	445
261-102/331-000	447
261-102/341-000	449
261-103	445
261-103/331-000	447
261-103/341-000	449
261-104	445
261-104/331-000	447
261-104/341-000	449
261-105	445
261-105/331-000	447
261-105/341-000	449
261-106	445
261-106/331-000	447
261-106/341-000	449
261-107	445
261-107/331-000	447
261-107/341-000	449
261-108	445
261-108/331-000	447
261-108/341-000	449
261-109	445
261-109/331-000	447
261-109/341-000	449
261-110	445
261-110/331-000	447
261-110/341-000	449
261-111	445
261-111/331-000	447
261-111/341-000	449
261-112	445
261-112/331-000	447
261-112/341-000	449
261-152	445
261-152/331-000	447
261-152/341-000	449
261-153	445
261-153/331-000	447
261-153/341-000	449
261-154	445
261-154/331-000	447

Item No.	Page
Serie 261	
261-154/341-000	449
261-155	445
261-155/331-000	447
261-155/341-000	449
261-156	445
261-156/331-000	447
261-156/341-000	449
261-157	445
261-157/331-000	447
261-157/341-000	449
261-158	445
261-158/331-000	447
261-158/341-000	449
261-159	445
261-159/331-000	447
261-159/341-000	449
261-160	445
261-160/331-000	447
261-160/341-000	449
261-161	445
261-161/331-000	447
261-161/341-000	449
261-162	445
261-162/331-000	447
261-162/341-000	449
261-202	445
261-202/332-000	447
261-202/342-000	449
261-203	445
261-203/332-000	447
261-203/342-000	449
261-204	445
261-204/332-000	447
261-204/342-000	449
261-205	445
261-205/332-000	447
261-205/342-000	449
261-206	445
261-206/332-000	447
261-206/342-000	449
261-207	445
261-207/332-000	447
261-207/342-000	449
261-208	445
261-208/332-000	447
261-208/342-000	449
261-209	445
261-209/332-000	447
261-209/342-000	449
261-210	445
261-210/332-000	447
261-210/342-000	449
261-211	445
261-211/332-000	447
261-211/342-000	449
261-212	445
261-212/332-000	447
261-212/342-000	449
261-252	445
261-252/332-000	447
261-252/342-000	449
261-253	445
261-253/332-000	447
261-253/342-000	449
261-254	445
261-254/332-000	447
261-254/342-000	449
261-255	445
261-255/332-000	447
261-255/342-000	449
261-256	445
261-256/332-000	447
261-256/342-000	449
261-257	445
261-257/332-000	447
261-257/342-000	449
261-258	445
261-258/332-000	447
261-258/342-000	449
261-259	445

Item Number Index

Item No.	Page
261 Series	
261-259/332-000	447
261-259/342-000	449
261-260	445
261-260/332-000	447
261-260/342-000	449
261-261	445
261-261/332-000	447
261-261/342-000	449
261-262	445
261-262/332-000	447
261-262/342-000	449
261-301	444
261-301/331-000	446
261-301/341-000	448
261-303	444
261-303/331-000	446
261-303/341-000	448
261-304	444
261-304/331-000	446
261-304/341-000	448
261-306	444
261-306/331-000	446
261-306/341-000	448
261-307	444
261-307/331-000	446
261-307/341-000	448
261-311	444
261-311/331-000	446
261-311/341-000	448
261-313	444
261-313/331-000	446
261-313/341-000	448
261-314	444
261-314/331-000	446
261-314/341-000	448
261-316	444
261-316/331-000	446
261-316/341-000	448
261-317	444
261-317/331-000	446
261-317/341-000	448
261-321	444
261-321/331-000	446
261-321/341-000	448
261-323	444
261-323/331-000	446
261-323/341-000	448
261-324	444
261-324/331-000	446
261-324/341-000	448
261-326	444
261-326/331-000	446
261-326/341-000	448
261-327	444
261-327/331-000	446
261-327/341-000	448
261-331	444
261-331/332-000	446
261-331/342-000	448
261-333	444
261-333/332-000	446
261-333/342-000	448
261-334	444
261-334/332-000	446
261-334/342-000	448
261-336	444
261-336/332-000	446
261-336/342-000	448
261-337	444
261-337/332-000	446
261-337/342-000	448
261-341	444
261-341/332-000	446
261-341/342-000	448
261-343	444
261-343/332-000	446
261-343/342-000	448
261-344	444
261-344/332-000	446
261-344/342-000	448

Item No.	Page
261 Series	
261-346	444
261-346/332-000	446
261-346/342-000	448
261-347	444
261-347/332-000	446
261-347/342-000	448
261-351	444
261-351/332-000	446
261-351/342-000	448
261-353	444
261-353/332-000	446
261-353/342-000	448
261-354	444
261-354/332-000	446
261-354/342-000	448
261-356	444
261-356/332-000	446
261-356/342-000	448
261-357	444
261-357/332-000	446
261-357/342-000	448
261-361	444
261-371	444
261-402	444
261-404	444
261-405	444
261-410	450
261-411	450
261-411/331-000	450
261-411/341-000	450
261-422	451
261-422/331-000	451
261-422/341-000	451
261-423	451
261-423/331-000	451
261-423/341-000	451
261-424	451
261-424/331-000	451
261-424/341-000	451
261-425	451
261-425/331-000	451
261-425/341-000	451
261-426	451
261-426/331-000	451
261-426/341-000	451
261-427	451
261-427/331-000	451
261-427/341-000	451
261-428	451
261-428/331-000	451
261-428/341-000	451
261-429	451
261-429/331-000	451
261-429/341-000	451
261-430	451
261-430/331-000	451
261-430/341-000	451
261-431	451
261-431/331-000	451
261-431/341-000	451
261-432	451
261-432/331-000	451
261-432/341-000	451
262 Series	
262-102	453
262-103	453
262-104	453
262-105	453
262-106	453
262-107	453
262-108	453
262-109	453
262-110	453
262-111	453
262-112	453
262-130	454
262-132	455
262-133	455
262-134	455

Item No.	Page
262 Series	
262-135	455
262-136	455
262-137	455
262-138	455
262-139	455
262-140	455
262-141	455
262-142	455
262-152	453
262-153	453
262-154	453
262-155	453
262-156	453
262-157	453
262-158	453
262-159	453
262-160	453
262-161	453
262-162	453
262-180	454
262-181	454
262-182	455
262-183	455
262-184	455
262-185	455
262-186	455
262-187	455
262-188	455
262-189	455
262-190	455
262-191	455
262-192	455
262-202	453
262-203	453
262-204	453
262-205	453
262-206	453
262-207	453
262-208	453
262-209	453
262-210	453
262-211	453
262-212	453
262-230	454
262-232	455
262-233	455
262-234	455
262-235	455
262-236	455
262-237	455
262-238	455
262-239	455
262-240	455
262-241	455
262-242	455
262-252	453
262-253	453
262-254	453
262-255	453
262-256	453
262-257	453
262-258	453
262-259	453
262-260	453
262-261	453
262-262	453
262-280	454
262-281	454
262-282	455
262-283	455
262-284	455
262-285	455
262-286	455
262-287	455
262-288	455
262-289	455
262-290	455
262-291	455
262-292	455

Item No.	Page
262 Series	
262-301	452
262-304	452
262-306	452
262-307	452
262-311	452
262-314	452
262-316	452
262-317	452
262-321	452
262-324	452
262-326	452
262-327	452
262-331	452
262-334	452
262-336	452
262-337	452
262-341	452
262-344	452
262-346	452
262-347	452
262-351	452
262-354	452
262-356	452
262-357	452
262-361	452
262-363	454
262-371	452
262-373	454
262-402	452
264 Series	
264-102	438
264-103	438
264-104	438
264-105	438
264-106	438
264-107	438
264-108	438
264-109	438
264-110	438
264-111	438
264-112	438
264-120	409
264-125	408
264-130	436
264-131	436
264-132	438
264-133	438
264-134	438
264-135	438
264-136	438
264-137	438
264-138	438
264-139	438
264-140	438
264-141	438
264-142	438
264-152	438
264-153	438
264-154	438
264-155	438
264-156	438
264-157	438
264-158	438
264-159	438
264-160	438
264-161	438
264-162	438
264-180	437
264-182	438
264-183	438
264-184	438
264-185	438
264-186	438
264-187	438
264-188	438
264-189	438
264-190	438
264-191	438
264-192	438

Item No.	Page
264 Series	
264-202	438
264-203	438
264-204	438
264-205	438
264-206	438
264-207	438
264-208	438
264-209	438
264-210	438
264-211	438
264-212	438
264-220	409
264-225	408
264-230	436
264-231	436
264-232	439
264-233	439
264-234	439
264-235	439
264-236	439
264-237	439
264-238	439
264-239	439
264-240	439
264-241	439
264-242	439
264-252	438
264-253	438
264-254	438
264-255	438
264-256	438
264-257	438
264-258	438
264-259	438
264-260	438
264-261	438
264-262	438
264-280	437
264-282	439
264-283	439
264-284	439
264-285	439
264-286	439
264-287	439
264-288	439
264-289	439
264-290	439
264-291	439
264-292	439
264-301	436
264-304	436
264-306	436
264-307	436
264-311	437
264-314	437
264-316	437
264-317	437
264-321	436
264-324	436
264-326	436
264-327	436
264-331	436
264-334	436
264-336	436
264-337	436
264-341	437
264-344	437
264-346	437
264-347	437
264-351	436
264-354	436
264-356	436
264-357	436
264-361	436
264-363	436
264-364	436
264-367	408
264-367	409
264-368	408
264-369	408

Item No.	Page
264 Series	
264-370	408
264-371	437
264-373	437
264-374	437
264-402	408
264-701	409
264-704	409
264-706	409
264-711	408
264-714	408
264-716	408
264-721	409
264-724	409
264-726	409
264-727	409
264-727/999-950	409
264-731	408
264-734	408
264-736	408
264-737	408
264-737/999-950	408
264-900	580
264-901	580
264-902	580
264-903	580
264-904	580
264-905	580
270 Series	
270-319	427
270-320	425
270-321	427
270-322	425
270-409	425
270-417	425
270-480	425
270-560	426
270-560/281-434	426
270-560/281-507	426
270-564	426
270-564/281-483	426
270-570	425
270-570/281-434	425
270-570/281-507	425
270-572	427
270-572/281-434	427
270-574	425
270-574/281-483	425
270-577	427
270-585	427
270-585/281-507	427
270-586	427
279 Series	
279-101	490
279-104	490
279-308	218
279-309	218
279-325	218
279-326	218
279-328	218
279-329	218
279-330	218
279-331	218
279-339	218
279-340	218
279-341	218
279-342	218
279-344	218
279-345	218
279-346	218
279-347	218
279-348	218
279-349	218

Item No.	Page
279 Series	
279-402	218
279-405	490
279-409	218
279-415	219
279-422	218
279-432	332
279-433	332
279-440	332
279-470	331
279-471	331
279-482	331
279-483	331
279-490	331
279-492	331
279-501	236
279-504	236
279-507	236
279-508	236
279-509	236
279-512	236
279-513	236
279-517	236
279-518	237
279-519	237
279-527	236
279-529	237
279-673/281-410	312
279-673/281-411	312
279-674/281-413	312
279-674/281-434	312
279-681	218
279-682	218
279-683	218
279-684	218
279-685	218
279-686	218
279-687	218
279-687/999-950	218
279-809/281-413	312
279-809/281-434	312
279-815/281-410	312
279-815/281-411	312
279-826	219
279-831	218
279-832	218
279-833	218
279-834	218
279-835	218
279-836	218
279-837	218
279-837/999-950	218
279-838	218
279-901	218
279-902	218
279-903	218
279-904	218
279-905	218
279-906	218
279-907	218
279-907/999-950	218
279-915/281-410	312
279-915/281-411	312
279-992	218
279-993	218
279-994	218
279-995	219
280 Series	
280-101	490
280-104	490
280-107	490
280-301	490
280-302	490
280-303	243
280-304	243
280-305	246

Item No.	Page
280 Series	
280-306	246
280-308	220
280-309	220
280-310	220
280-311	220
280-312	222
280-313	222
280-314	220
280-315	220
280-318	222
280-319	297
280-320	299
280-321	297
280-322	490
280-323	299
280-324	220
280-325	519
280-326	220
280-326	262
280-332	490
280-333	519
280-334	220
280-335	220
280-336	243
280-339	246
280-340	240
280-341	240
280-342	240
280-343	240
280-344	220
280-346	220
280-348	222
280-352	220
280-353	220
280-354	222
280-355	222
280-356	220
280-357	220
280-358	220
280-359	220
280-366	240
280-369	240
280-371	260
280-373	261
280-374	260
280-376	261
280-394	519
280-395	519
280-402	221
280-404	219
280-405	378
280-409	221
280-415	221
280-418	221
280-419	221
280-422	221
280-432	332
280-433	332
280-434	597
280-435	597
280-436	597
280-437	597
280-438	597
280-439	597
280-440	332
280-470	331
280-471	331
280-472	331
280-473	519
280-474	519
280-475	519
280-476	519
280-477	519
280-478	519
280-482	332
280-483	332
280-490	332
280-492	332
280-494	519

Item Number Index

Item No.	Page
280 Series	
280-510	243
280-513	241
280-514	242
280-515	311
280-517	240
280-519	240
280-520	240
280-521	241
280-522	241
280-523	240
280-524	240
280-525	241
280-526	241
280-527	240
280-528	242
280-529	240
280-530	240
280-531	242
280-532	242
280-533	240
280-534	240
280-537	240
280-543	241
280-547	246
280-548	246
280-549	246
280-550	246
280-551	246
280-552	246
280-553	296
280-554	305
280-555	305
280-556	305
280-557	246
280-558	246
280-559	296
280-560	296
280-560/281-434	298
280-561	296
280-561/281-413	298
280-562	306
280-562/281-411	306
280-562/281-420	310
280-562/281-434	310
280-563	296
280-564	296
280-564/281-483	298
280-565	306
280-565/280-319	306
280-565/280-321	306
280-566	306
280-566/281-496	298
280-567	296
280-568	306
280-570	300
280-570/281-434	299
280-571	300
280-571/281-413	299
280-572	308
280-572/281-411	308
280-572/281-420	310
280-572/281-434	310
280-573	300
280-574	300
280-574/281-483	299
280-575	308
280-575/280-320	308
280-575/280-323	308
280-576	308
280-576/281-496	299
280-577	300
280-577/281-496	299
280-578	308
280-580	302
280-580/281-434	304
280-581/281-413	304
280-582	300
280-583	311
280-584	302
280-584/281-483	304
280-585	311

Item No.	Page
280 Series	
280-586	311
280-586/281-496	304
280-587	302
280-588	302
280-588/280-320	302
280-588/280-323	302
280-592	306
280-593	308
280-597	246
280-610	288
280-637	222
280-637/999-950	222
280-640	222
280-641	222
280-646	223
280-650	220
280-650/056-000	220
280-651	222
280-653	220
280-654	222
280-654/056-000	222
280-656	223
280-671	220
280-672	220
280-673/281-410	314
280-673/281-411	314
280-675	519
280-681	220
280-683	220
280-684	220
280-687	220
280-687/999-950	220
280-801/281-411	322
280-801/281-413	324
280-801/281-414	324
280-801/281-415	324
280-801/281-416	324
280-801/281-417	324
280-801/281-418	324
280-801/281-420	322
280-801/281-421	322
280-803/281-411	323
280-803/281-413	325
280-803/281-414	325
280-803/281-415	325
280-803/281-416	325
280-803/281-417	325
280-803/281-418	325
280-803/281-420	323
280-803/281-421	323
280-805	262
280-809/281-413	314
280-809/281-434	314
280-815/281-410	314
280-815/281-411	314
280-816	288
280-826	219
280-829	262
280-830	220
280-831	220
280-832	220
280-833	220
280-834	220
280-835	220
280-835/056-000	220
280-836	262
280-837	220
280-837/999-950	220
280-838	220
280-839	262
280-850	288
280-850/281-413	288
280-852	288
280-852/281-413	288
280-854	288
280-854/281-413	288
280-856	288
280-856/281-413	288
280-868	260

Item No.	Page
280 Series	
280-869	260
280-870	260
280-871	260
280-874	261
280-875	261
280-876	260
280-879	260
280-880	260
280-881	261
280-882	261
280-883	261
280-884	261
280-885	261
280-889	243
280-891	242
280-901	220
280-902	220
280-902/056-000	220
280-903	220
280-904	220
280-905	220
280-906	220
280-907	220
280-907/999-950	220
280-912	262
280-913	262
280-914	262
280-915/281-410	314
280-915/281-411	314
280-916	288
280-940/281-410	318
280-940/281-411	318
280-941/281-489	318
280-941/281-490	318
280-941/281-491	318
280-941/281-492	318
280-942/281-487	318
280-942/281-488	318
280-943/281-413	318
280-943/281-434	318
280-946	223
280-992	220
280-993	220
280-994	220
280-995	219
280-996	223
280-998	222
281 Series	
281-101	490
281-104	490
281-107	490
281-301	490
281-302	490
281-309	283
281-311	283
281-312	227
281-313	227
281-318	227
281-322	490
281-324	226
281-326	226
281-328	226
281-329	226
281-330	226
281-331	226
281-332	490
281-333	493
281-334	226
281-335	226
281-336	493
281-339	226
281-340	244
281-341	244
281-342	244
281-343	244
281-344	226
281-345	226
281-346	226

Item No.	Page
281 Series	
281-347	226
281-348	227
281-349	226
281-350	226
281-355	226
281-356	226
281-357	227
281-358	227
281-365	248
281-366	248
281-402	227
281-405	490
281-407	221
281-409	227
281-415	227
281-418	227
281-419	227
281-421	241
281-422	227
281-440	332
281-470	331
281-471	331
281-472	331
281-482	332
281-483	332
281-485	332
281-490	332
281-492	332
281-503	96
281-511	286
281-512	286
281-512/281-417	286
281-512/281-418	286
281-512/281-501	286
281-530	248
281-531	248
281-532	248
281-610	286
281-611	282
281-611/281-417	282
281-611/281-418	282
281-611/281-541	282
281-611/281-542	282
281-612	282
281-612/281-417	282
281-612/281-418	282
281-612/281-541	282
281-612/281-542	282
281-613	284
281-613/281-417	284
281-613/281-418	284
281-613/281-541	284
281-613/281-542	284
281-616	282
281-619	244
281-620	244
281-622	282
281-622/281-417	282
281-622/281-418	282
281-622/281-541	282
281-622/281-542	282
281-623	284
281-623/281-417	284
281-623/281-418	284
281-623/281-541	284
281-623/281-542	284
281-624	283
281-629	244
281-630	244
281-631	227
281-633/281-410	320
281-633/281-411	320
281-634/281-413	320
281-634/281-434	320
281-634/281-434	320
281-635/281-489	320
281-635/281-490	320
281-635/281-491	320

Item No.	Page
281 Series	
281-635/281-492	320
281-636/281-487	320
281-636/281-488	320
281-637	227
281-637/999-950	227
281-651	227
281-652	226
281-653	226
281-654	226
281-656	226
281-656	286
281-657	226
281-657/999-950	226
281-658	226
281-659	264
281-660	264
281-663	226
281-664	226
281-665/281-400	316
281-665/281-401	316
281-665/281-410	316
281-665/281-411	316
281-666	264
281-668	226
281-672	283
281-673/281-400	316
281-673/281-401	316
281-673/281-410	316
281-673/281-411	316
281-678	226
281-679	226
281-681	226
281-683	226
281-684	226
281-685	226
281-686	226
281-687	226
281-687/999-950	226
281-901	226
281-902	226
281-903	226
281-904	226
281-905	226
281-906	226
281-907	226
281-907/999-950	226
281-912	264
281-915/281-400	316
281-915/281-401	316
281-915/281-410	316
281-915/281-411	316
281-916	286
281-992	226
281-993	226
281-994	226
281-998	227
282 Series	
282-101	491
282-104	491
282-107	491
282-120	496
282-122	496
282-124	497
282-126	496
282-128	496
282-128/281-413	497
282-128/281-417	497
282-128/281-418	497
282-131	494
282-133	494
282-135	494
282-137	494
282-138	495
282-139	495
282-140	495
282-141	495
282-301	491
282-302	491
282-308	228

Item No.	Page
282 Series	
282-309	228
282-311	496
282-312	496
282-314	494
282-315	494
282-322	491
282-325	228
282-326	228
282-328	228
282-329	228
282-330	228
282-331	228
282-332	491
282-333	276
282-334	276
282-339	228
282-340	228
282-341	228
282-342	228
282-357	228
282-358	228
282-360	274
282-361	274
282-365	274
282-366	274
282-367	228
282-368	228
282-369	591
282-370	274
282-372	274
282-373	274
282-374	274
282-384	270
282-385	270
282-386	270
282-387	270
282-390	270
282-391	270
282-392	270
282-402	228
282-405	276
282-409	228
282-415	208
282-422	228
282-424	270
282-432	92
282-432/100-000	92
282-433	92
282-433/100-000	92
282-434	92
282-434/100-000	92
282-435	92
282-435/011-000	92
282-435/301-000	92
282-436	92
282-436/301-000	92
282-436/304-000	92
282-437	92
282-437/011-000	92
282-437/012-000	92
282-438	92
282-438/300-000	92
282-438/301-000	92
282-439	92
282-439/011-000	92
282-440	92
282-442	274
282-443	274
282-444	274
282-445	274
282-446	274
282-451	496
282-452	496
282-453	496
282-454	496
282-457	496
282-458	496
282-638	276
282-639	276
282-640	276

Item No.	Page
282 Series	
282-641	276
282-681	228
282-682	228
282-684	228
282-687	228
282-687/999-950	228
282-694	276
282-695	276
282-696	276
282-696	278
282-697	276
282-698/281-413	278
282-698/281-429	278
282-698/281-434	278
282-698/281-449	278
282-699	276
282-811	274
282-821	274
282-841	274
282-841/049-000	275
282-860	270
282-865	270
282-866	271
282-868	271
282-870	270
282-881	92
282-882	92
282-883	92
282-884	92
282-885	92
282-886	92
282-887	92
282-888	92
282-901	228
282-902	228
282-904	228
282-907	228
282-907/999-950	228
282-992	228
282-993	228
283 Series	
283-101	492
283-104	492
283-107	492
283-301	492
283-302	492
283-322	492
283-325	230
283-326	230
283-328	230
283-329	230
283-330	230
283-331	230
283-332	492
283-333	493
283-335	493
283-350	231
283-351	231
283-352	231
283-353	231
283-354	231
283-355	231
283-357	230
283-367	230
283-400	230
283-402	230
283-404	204
283-405	492
283-407	204
283-409	230
283-414	230
283-415	230
283-422	230

Item No.	Page
283 Series	
283-671	231
283-672	231
283-674	231
283-677	231
283-677/999-950	231
283-901	230
283-902	230
283-904	230
283-907	230
283-907/999-950	230
283-992	230
283-998	231
284 Series	
284-101	492
284-104	492
284-107	492
284-301	492
284-302	492
284-308	229
284-309	229
284-322	492
284-325	229
284-326	229
284-328	229
284-329	229
284-330	229
284-331	229
284-332	492
284-333	493
284-334	219
284-336	218
284-339	229
284-340	229
284-341	229
284-342	229
284-343	493
284-344	219
284-346	218
284-357	229
284-358	229
284-367	229
284-368	229
284-400	229
284-402	229
284-405	492
284-409	229
284-412	233
284-413	227
284-414	219
284-415	210
284-422	229
284-621	233
284-624	233
284-681	229
284-682	229
284-684	229
284-687	229
284-687/999-950	229
284-901	229
284-902	229
284-904	229
284-907	229
284-907/999-950	229
284-992	229
284-993	229
285 Series	
285-131	204
285-134	204
285-135	204
285-137	204
285-137/999-950	204
285-139	204
285-141	209

Item Number Index

Item No.	Page
285 Series	
285-144	209
285-147	209
285-148	209
285-150	208
285-151	208
285-154	208
285-157	208
285-157/999-950	208
285-159	208
285-168	211
285-169	210
285-170	210
285-172	208
285-181	211
285-184	211
285-187	211
285-188	211
285-191	210
285-194	210
285-195	210
285-197	210
285-197/999-950	210
285-199	210
285-401	232
285-407	210
285-416	232
285-420	204
285-421	204
285-427	204
285-430	204
285-435	204
285-440	208
285-441	208
285-442	209
285-447	208
285-448	209
285-450	208
285-495	210
285-634	232
285-635	232
285-637	232
285-637/999-950	232
285-935	204
285-950	208
285-992	232
285-995	210
285-1161	213
285-1164	213
285-1165	213
285-1167	213
285-1169	212
285-1171	212
285-1175	212
285-1177	212
285-1178	212
285-1179	213
285-1181	212
285-1184	212
285-1185	212
285-1187	212
293 Series	
293-219	484
293-220	484
293-221	484
293-222	484
293-225	484
293-228	485
293-230	485
293-325	484
294 Series	
294-199	480
294-364	481

Item No.	Page
294 Series	
294-370	481
294-375	481
294-384	481
294-4002	473
294-4003	474
294-4004	476
294-4005	478
294-4006	480
294-4007	480
294-4012	473
294-4013	474
294-4014	476
294-4015	478
294-4022	473
294-4023	474
294-4024	476
294-4025	478
294-4032	473
294-4035	478
294-4042	473
294-4043	474
294-4044	476
294-4045	478
294-4052	473
294-4053	474
294-4055	478
294-4072	473
294-4075	478
294-4093/3025-000	474
294-4094/4025-000	476
294-4095/5025-000	478
294-4095/5026-000	478
294-4095/5027-000	478
294-4213	475
294-4214	477
294-4215	479
294-4223	475
294-4224	477
294-4225	479
294-4235	479
294-4253	475
294-4255	479
294-4275	479
294-4313	475
294-4314	477
294-4315	479
294-4323	475
294-4324	477
294-4325	479
294-4335	479
294-4353	475
294-4355	479
294-4375	479
294-4413	474
294-4414	476
294-4415	478
294-4423	474
294-4424	476
294-4425	478
294-4435	478
294-4453	474
294-4455	478
294-4475	478
294-5002	473
294-5003	474
294-5004	476
294-5005	478
294-5012	473
294-5013	474
294-5014	476
294-5015	478
294-5022	473
294-5023	474
294-5024	476
294-5025	478
294-5032	473

Item No.	Page
294 Series	
294-5035	478
294-5042	473
294-5043	474
294-5044	476
294-5045	478
294-5052	473
294-5053	474
294-5055	478
294-5072	473
294-5075	478
294-5094/4025-000	476
294-5095/5025-000	478
294-5095/5026-000	478
294-5095/5027-000	478
294-5113	474
294-5114	476
294-5123	474
294-5124	476
294-5153	474
294-5155	478
294-5175	478
294-5213	475
294-5214	477
294-5215	479
294-5223	475
294-5224	477
294-5225	479
294-5235	479
294-5253	475
294-5255	479
294-5275	479
294-5313	475
294-5314	477
294-5315	479
294-5323	475
294-5324	477
294-5325	479
294-5335	479
294-5353	475
294-5355	479
294-5375	479
294-5413	474
294-5414	476
294-5415	478
294-5423	474
294-5424	476
294-5425	478
294-5435	478
294-5453	474
294-5455	478
294-5475	478
709 Series	
709-107	502
709-110	271
709-111	271
709-112	271
709-118	583
709-119	583
709-120	583
709-153	593
709-154	593
709-156	594
709-167	593
709-168	593
709-169	594
709-170	263
709-177	248
709-178	462
709-183	593
709-193	583
709-196	415
709-310	329
709-311	329
709-312	329
709-322	329

Item No.	Page
709 Series	
709-324	329
709-326	329
709-332	329
709-334	329
709-336	329
709-350	560
709-352	560
726 Series	
726-121	502
726-122	502
726-141	502
726-142	502
726-221	502
726-222	502
726-241	502
726-242	502
726-321	505
726-322	505
726-325	505
726-326	505
726-341	505
726-342	505
726-345	505
726-346	505
726-421	503
726-441	503
726-521	503
726-541	503
726-601	506
726-602	506
726-611	506
726-612	506
726-621	506
726-622	506
726-651	507
726-652	507
726-661	507
726-662	507
726-671	507
726-672	507
726-721	504
726-741	504
726-770	508
726-771	508
726-821	504
726-841	504
726-901	511
726-902	502
726-903	510
726-904	510
726-905	510
726-906	511
726-907	511
727 Series	
727-105	516
727-106	516
727-107	516
727-108	516
727-113	516
727-114	516
727-115	516
727-116	516
727-117	516
727-119	516
727-121	516
727-122	516
727-123	516
727-124	516
727-125	517
727-126	517

Item No.	Page
727 Series	
727-127	517
727-128	517
727-129	516
727-130	516
727-131	516
727-132	516
727-133	516
727-134	516
727-135	517
727-136	517
727-137	517
727-138	517
727-155	516
727-156	516
727-157	516
727-158	516
727-159	516
727-160	516
727-161	516
727-162	516
727-163	516
727-164	516
727-165	516
727-166	516
727-167	516
727-168	516
727-169	516
727-170	516
727-197	514
727-198	514
727-199	514
727-205	514
727-206	514
727-207	514
727-208	514
727-217	514
727-219	514
727-220	514
727-221	514
727-222	514
727-223	514
727-224	514
727-225	515
727-226	515
727-227	515
727-228	515
727-229	514
727-230	514
727-231	514
727-232	514
727-233	514
727-234	514
727-235	515
727-236	515
727-237	515
727-238	515
734 Series	
734-326	129
734-327	129
734-328	129
734-329	129
734-430	170
734-431	170
769 Series	
769-101	392
769-101/022-000	395
769-102	392
769-102/021-000	393
769-102/022-000	395
769-103	392
769-103/000-036	398
769-103/000-037	398
769-103/000-038	398
769-103/000-039	398
769-103/021-000	393
769-103/022-000	395

Item No.	Page
769 Series	
769-104	392
769-104/000-036	398
769-104/000-037	398
769-104/000-038	398
769-104/000-039	398
769-104/021-000	393
769-104/022-000	395
769-105	392
769-105/000-036	398
769-105/000-037	398
769-105/000-038	398
769-105/000-039	398
769-105/021-000	393
769-105/022-000	395
769-106	392
769-106/000-036	398
769-106/000-037	398
769-106/000-038	398
769-106/000-039	398
769-106/021-000	393
769-106/022-000	395
769-107	392
769-107/000-036	398
769-107/000-037	398
769-107/000-038	398
769-107/000-039	398
769-107/021-000	393
769-107/022-000	395
769-108	392
769-108/000-036	398
769-108/000-037	398
769-108/000-038	398
769-108/000-039	398
769-108/021-000	393
769-108/022-000	395
769-109	392
769-109/000-036	398
769-109/000-037	398
769-109/000-038	398
769-109/000-039	398
769-109/021-000	393
769-109/022-000	395
769-110	392
769-110/000-036	398
769-110/000-037	398
769-110/000-038	398
769-110/000-039	398
769-110/021-000	393
769-110/022-000	395
769-111	392
769-111/000-036	398
769-111/000-037	398
769-111/000-038	398
769-111/000-039	398
769-111/021-000	393
769-111/022-000	395
769-112	392
769-112/000-036	398
769-112/000-037	398
769-112/000-038	398
769-112/000-039	398
769-112/021-000	393
769-112/022-000	395
769-113	392
769-113/000-036	398
769-113/000-037	398
769-113/000-038	398
769-113/000-039	398
769-113/021-000	393
769-113/022-000	395
769-114	392
769-114/000-036	398
769-114/000-037	398
769-114/000-038	398
769-114/000-039	398
769-114/021-000	393
769-114/022-000	395
769-115	392
769-115/000-036	398
769-115/000-037	398
769-115/000-038	398

Item No.	Page
769 Series	
769-115/000-039	398
769-115/021-000	393
769-115/022-000	395
769-121	394
769-122	394
769-123	394
769-124	394
769-125	394
769-126	394
769-127	394
769-128	394
769-129	394
769-130	394
769-131	394
769-132	394
769-133	394
769-134	394
769-135	394
769-151	348
769-156	344
769-161	366
769-162/769-313	366
769-163/769-313	366
769-164/769-313	366
769-165/769-313	366
769-171	346
769-171/000-006	346
769-176	342
769-176/000-006	342
769-181	364
769-182/769-314	364
769-183/769-314	364
769-184/769-314	364
769-185/769-314	364
769-191	368
769-192/769-319	368
769-193/769-319	368
769-194/769-319	368
769-195/769-319	368
769-201	348
769-202	355
769-203	355
769-207	348
769-208/281-410	357
769-208/281-411	357
769-209/281-413	359
769-209/281-434	359
769-211	346
769-212	355
769-213	355
769-214	352
769-217	346
769-218/281-410	357
769-218/281-411	357
769-219/281-413	359
769-219/281-434	359
769-221	344
769-222	354
769-223	354
769-227	344
769-228/281-410	356
769-228/281-411	356
769-229/281-413	358
769-229/281-434	358
769-231	342
769-232	354
769-233	354
769-237	342
769-238/281-410	356
769-238/281-411	356
769-239/281-413	358
769-239/281-434	358
769-242	362
769-243	362
769-251	350
769-251/000-006	350
769-257	350
769-301	348
769-302	348

Item No.	Page
769 Series	
769-303	346
769-304	346
769-305	344
769-306	344
769-307	342
769-308	342
769-309	355
769-310	355
769-311	355
769-312	355
769-313	355
769-314	355
769-315	352
769-316	352
769-317	362
769-318	362
769-319	362
769-320	350
769-321	350
769-402	392
769-410	204
769-411	382
769-412	382
769-413	382
769-414	382
769-428	392
769-429	392
769-430	392
769-431	392
769-434	383
769-435	342
769-436	392
769-438	342
769-439	342
769-470	342
769-471	342
769-472	342
769-499	382
769-501	396
769-501/000-006	396
769-501/000-016	396
769-502	396
769-502/000-006	396
769-502/000-016	396
769-503	396
769-503/000-006	396
769-503/000-016	396
769-504	396
769-504/000-006	396
769-504/000-016	396
769-505	396
769-505/000-006	396
769-505/000-016	396
769-506	396
769-506/000-006	396
769-506/000-016	396
769-512	396
769-512/000-006	396
769-512/000-016	396
769-513	396
769-513/000-006	396
769-513/000-016	396
769-515	396
769-515/000-006	396
769-515/000-016	396
769-602	382
769-602/001-000	382
769-602/002-000	382
769-602/004-000	383
769-602/005-000	384
769-602/006-000	385
769-603	382
769-603/001-000	382
769-603/002-000	382
769-603/004-000	383
769-603/005-000	384
769-603/006-000	385
769-604	382

Item Number Index

Item No.	Page
769 Series	
769-604/001-000	382
769-604/002-000	382
769-604/004-000	383
769-604/005-000	384
769-604/006-000	385
769-605	382
769-605/001-000	382
769-605/002-000	382
769-605/004-000	383
769-605/005-000	384
769-605/006-000	385
769-606	382
769-606/001-000	382
769-606/002-000	382
769-606/004-000	383
769-606/005-000	384
769-606/006-000	385
769-607	382
769-607/001-000	382
769-607/002-000	382
769-607/004-000	383
769-607/005-000	384
769-607/006-000	385
769-608	382
769-608/001-000	382
769-608/002-000	382
769-608/004-000	383
769-608/005-000	384
769-608/006-000	385
769-609	382
769-609/001-000	382
769-609/002-000	382
769-609/004-000	383
769-609/005-000	384
769-609/006-000	385
769-610	382
769-610/001-000	382
769-610/002-000	382
769-610/004-000	383
769-610/005-000	384
769-610/006-000	385
769-611	382
769-611/001-000	382
769-611/002-000	382
769-611/004-000	383
769-611/005-000	384
769-611/006-000	385
769-612	382
769-612/001-000	382
769-612/002-000	382
769-612/004-000	383
769-612/005-000	384
769-612/006-000	385
769-613	382
769-613/001-000	382
769-613/002-000	382
769-613/004-000	383
769-613/005-000	384
769-613/006-000	385
769-614	382
769-614/001-000	382
769-614/002-000	382
769-614/004-000	383
769-614/005-000	384
769-614/006-000	385
769-615	382
769-615/001-000	382
769-615/002-000	382
769-615/004-000	383
769-615/005-000	384
769-615/006-000	385
769-632	386
769-632/003-000	387
769-632/003-036	387
769-632/004-000	388
769-632/007-000	390
769-633	386
769-633/003-000	387
769-633/003-036	387
769-633/004-000	388
769-633/007-000	390

Item No.	Page
769 Series	
769-634	386
769-634/003-000	387
769-634/003-036	387
769-634/004-000	388
769-634/007-000	390
769-635	386
769-635/003-000	387
769-635/003-036	387
769-635/004-000	388
769-635/007-000	390
769-636	386
769-636/003-000	387
769-636/003-036	387
769-636/004-000	388
769-636/007-000	390
769-637	386
769-637/003-000	387
769-637/004-000	388
769-637/007-000	390
769-638	386
769-638/003-000	387
769-638/004-000	388
769-638/007-000	390
769-639	386
769-639/003-000	387
769-639/004-000	388
769-639/007-000	390
769-640	386
769-640/003-000	387
769-640/004-000	388
769-640/007-000	390
769-641	386
769-641/003-000	387
769-641/004-000	388
769-641/007-000	390
769-642	386
769-642/003-000	387
769-642/004-000	388
769-642/007-000	390
769-643	386
769-643/003-000	387
769-643/004-000	388
769-643/007-000	390
769-644	386
769-644/003-000	387
769-644/004-000	388
769-644/007-000	390
769-645	386
769-645/003-000	387
769-645/004-000	388
769-645/007-000	390
769-662	386
769-662/003-000	387
769-662/004-000	388
769-663	386
769-663/003-000	387
769-663/004-000	388
769-664	386
769-664/003-000	387
769-664/004-000	388
769-665	386
769-665/003-000	387
769-665/004-000	388
769-666	386
769-666/003-000	387
769-666/004-000	388
769-667	386
769-667/003-000	387
769-667/004-000	388
769-668	386
769-668/003-000	387
769-668/004-000	388
769-669	386
769-669/003-000	387
769-669/004-000	388
769-670	386
769-670/003-000	387
769-670/004-000	388
769-671	386
769-671/003-000	387
769-671/004-000	388

Item No.	Page
769 Series	
769-672	386
769-672/003-000	387
769-672/004-000	388
769-673	386
769-673/003-000	387
769-673/004-000	388
769-674	386
769-674/003-000	387
769-674/004-000	388
769-675	386
769-675/003-000	387
769-675/004-000	388
769-1602	399
769-1603	399
769-1604	399
769-1605	399
769-1606	399
769-1607	399
769-1608	399
769-1609	399
769-1610	399
769-1611	399
769-1612	399
769-1613	399
769-1614	399
769-1615	399
773 Series	
773-173	529
773-331	531
773-332	527
773-492	530
773-493	530
773-494	530
773-496	530
773-498	530
773-514	529
773-602	528
773-604	528
773-606	528
777 Series	
777-300	255
777-303	188
777-305	253
777-310	251
780 Series	
780-317	251
780-452	333
780-453	333
780-454	333
780-455	333
780-456	333
780-457	333
780-458	333
780-601	251
780-602	251
780-604	251
780-607	251
780-607/999-950	251
780-613	255
780-631	251
780-637	251
780-637/999-950	251
780-640	251
780-651	251
780-654	251
780-992	251
780-993	251

Item No.	Page
781 Series	
781-452	333
781-453	333
781-454	333
781-455	333
781-456	333
781-601	252
781-604	252
781-607	252
781-607/999-950	252
781-613	255
781-623	255
781-631	252
781-637	252
781-637/999-950	252
781-643	255
781-651	252
781-653	255
781-992	252
781-993	252
782 Series	
782-300	256
782-317	253
782-321	256
782-601	253
782-604	253
782-607	253
782-607/999-950	253
782-613	253
782-613	256
782-623	256
782-992	253
783 Series	
783-317	254
783-321	256
783-601	254
783-604	254
783-607	254
783-607/999-950	254
783-613	256
783-623	256
783-992	254
784 Series	
784-601	253
784-604	253
784-607	253
784-607/999-950	253
784-613	256
784-623	256
784-992	253
785 Series	
785-601	254
785-604	254
785-607	254
785-613	257
785-623	257
790 Series	
790-100	557
790-101	557
790-108	556
790-110	556
790-112	556
790-113	556
790-114	556
790-115	556
790-116	556
790-124	556
790-133	556

Item No.	Page
790 Series	
790-134	556
790-140	557
790-144	556
790-145	556
790-190	557
790-191	557
790-192	557
790-193	557
790-208	559
790-216	559
790-220	559
790-300	562
790-301	562
790-302	562
790-310	563
790-311	563
790-312	563
790-350/790-398	564
790-352/790-398	564
790-360/790-398	564
790-362/790-398	564
790-398	564
790-400	561
791 Series	
791-107	560
791-111	560
791-117	560
791-124	560
793 Series	
793-472	576
793-474	576
793-487	576
793-494	576
793-495	576
793-496	576
793-497	576
793-498	576
793-501	581
793-501/000-002	581
793-501/000-005	581
793-501/000-006	581
793-501/000-007	581
793-501/000-012	581
793-501/000-017	581
793-501/000-023	581
793-501/000-024	581
793-502	572
793-503	572
793-504	572
793-505	572
793-506	572
793-507	572
793-508	572
793-509	572
793-510	572
793-511	572
793-512	572
793-513	572
793-514	572
793-515	572
793-516	572
793-517	572
793-518	574
793-519	574
793-520	574
793-521	574
793-522	574
793-523	574
793-524	574
793-525	574
793-526	574
793-527	574
793-528	574
793-529	574

Item No.	Page
793 Series	
793-530	574
793-531	574
793-532	574
793-533	574
793-534	574
793-535	574
793-536	574
793-537	574
793-538	574
793-539	574
793-540	574
793-541	574
793-542	574
793-543	576
793-544	576
793-545	576
793-546	576
793-547	576
793-548	576
793-549	576
793-550	576
793-552	576
793-553	579
793-554	579
793-555	579
793-556	579
793-557	579
793-558	579
793-559	579
793-560	579
793-561	579
793-562	579
793-563	579
793-564	579
793-565	572
793-566	572
793-569	572
793-570	572
793-571	572
793-572	572
793-573	572
793-574	576
793-575	576
793-576	576
793-577	576
793-578	576
793-579	576
793-580	576
793-580	577
793-581	576
793-582	576
793-583	576
793-599	572
793-602	573
793-603	573
793-604	573
793-605	573
793-606	573
793-607	573
793-608	573
793-609	573
793-610	573
793-611	573
793-612	573
793-613	573
793-614	573
793-615	573
793-616	573
793-617	573
793-618	575
793-619	575
793-620	575
793-621	575
793-622	575
793-623	575
793-624	575
793-625	575
793-626	575
793-627	575
793-643	577

Item No.	Page
793 Series	
793-644	577
793-645	577
793-646	577
793-647	577
793-648	577
793-649	577
793-650	577
793-652	577
793-653	579
793-654	579
793-655	579
793-656	579
793-657	579
793-658	579
793-659	579
793-660	579
793-661	579
793-662	579
793-663	579
793-664	579
793-666	573
793-667	573
793-668	573
793-669	573
793-670	573
793-671	573
793-672	573
793-674	577
793-675	577
793-676	577
793-677	577
793-678	577
793-679	577
793-681	577
793-682	577
793-683	577
793-687	577
793-688	573
793-694	577
793-695	577
793-696	577
793-697	577
793-698	577
793-699	573
793-900	573
793-901	573
793-902	573
793-903	573
793-912	573
793-913	573
793-933	516
793-958	578
793-3501	581
793-3502	572
793-3503	572
793-3504	572
793-3505	572
793-3506	572
793-3507	572
793-3508	572
793-3509	572
793-3510	572
793-3544	576
793-3545	576
793-3565	572
793-3566	572
793-3599	572
793-4472	576
793-4474	576
793-4487	576
793-4494	576
793-4495	576
793-4496	576
793-4497	576
793-4498	576
793-4501	581
793-4501/000-002	581

Item No.	Page
793 Series	
793-4501/000-005	581
793-4501/000-006	581
793-4501/000-007	581
793-4501/000-012	581
793-4501/000-017	581
793-4501/000-023	581
793-4501/000-024	581
793-4502	572
793-4503	572
793-4504	572
793-4505	572
793-4506	572
793-4507	572
793-4508	572
793-4509	572
793-4510	572
793-4511	572
793-4512	572
793-4513	572
793-4514	572
793-4515	572
793-4516	572
793-4517	572
793-4518	574
793-4519	574
793-4520	574
793-4521	574
793-4522	574
793-4523	574
793-4524	574
793-4525	574
793-4526	574
793-4527	574
793-4528	574
793-4529	574
793-4530	574
793-4531	574
793-4532	574
793-4533	574
793-4534	574
793-4535	574
793-4536	574
793-4537	574
793-4538	574
793-4539	574
793-4540	574
793-4541	574
793-4542	574
793-4543	576
793-4544	576
793-4545	576
793-4546	576
793-4547	576
793-4548	576
793-4549	576
793-4550	576
793-4552	576
793-4553	579
793-4554	579
793-4555	579
793-4556	579
793-4557	579
793-4558	579
793-4559	579
793-4560	579
793-4561	579
793-4562	579
793-4563	579
793-4564	579
793-4565	572
793-4566	572
793-4569	572
793-4570	572
793-4571	572
793-4572	572
793-4573	572
793-4574	576
793-4575	576
793-4576	576
793-4577	576
793-4578	576

Item Number Index

Item No.	Page
793 Series	
793-4579	576
793-4580	576
793-4581	576
793-4582	576
793-4583	576
793-4599	572
793-4602	573
793-4603	573
793-4604	573
793-4605	573
793-4606	573
793-4607	573
793-4608	573
793-4609	573
793-4610	573
793-4611	573
793-4612	573
793-4613	573
793-4614	573
793-4615	573
793-4616	573
793-4617	573
793-4618	575
793-4619	575
793-4620	575
793-4621	575
793-4622	575
793-4623	575
793-4624	575
793-4625	575
793-4626	575
793-4627	575
793-4643	577
793-4644	577
793-4645	577
793-4646	577
793-4647	577
793-4648	577
793-4649	577
793-4652	577
793-4653	579
793-4654	579
793-4655	579
793-4656	579
793-4657	579
793-4658	579
793-4659	579
793-4660	579
793-4661	579
793-4662	579
793-4663	579
793-4664	579
793-4666	573
793-4667	573
793-4668	573
793-4669	573
793-4670	573
793-4671	573
793-4672	573
793-4674	577
793-4675	577
793-4676	577
793-4677	577
793-4678	577
793-4679	577
793-4680	577
793-4681	577
793-4682	577
793-4683	577
793-4687	577
793-4688	573
793-4694	577
793-4695	577
793-4696	577
793-4697	577
793-4699	573
793-4900	573
793-4901	573
793-4902	573

Item No.	Page
793 Series	
793-4903	573
793-4912	573
793-4913	573
793-4958	578
793-5472	576
793-5474	576
793-5487	576
793-5494	576
793-5495	576
793-5496	576
793-5497	576
793-5498	576
793-5501	581
793-5501/000-002	581
793-5501/000-005	581
793-5501/000-006	581
793-5501/000-007	581
793-5501/000-012	581
793-5501/000-017	581
793-5501/000-023	581
793-5501/000-024	581
793-5502	572
793-5503	572
793-5504	572
793-5505	572
793-5506	572
793-5507	572
793-5508	572
793-5509	572
793-5510	572
793-5511	572
793-5512	572
793-5513	572
793-5514	572
793-5515	572
793-5516	572
793-5517	572
793-5518	574
793-5519	574
793-5520	574
793-5521	574
793-5522	574
793-5523	574
793-5524	574
793-5525	574
793-5526	574
793-5527	574
793-5528	574
793-5529	574
793-5530	574
793-5531	574
793-5532	574
793-5533	574
793-5534	574
793-5535	574
793-5536	574
793-5537	574
793-5538	574
793-5539	574
793-5540	574
793-5541	574
793-5542	574
793-5543	576
793-5544	576
793-5545	576
793-5546	576
793-5547	576
793-5548	576
793-5549	576
793-5550	576
793-5552	576
793-5553	579
793-5554	579
793-5555	579
793-5556	579
793-5557	579
793-5558	579
793-5559	579
793-5560	579

Item No.	Page
793 Series	
793-5561	579
793-5564	579
793-5565	572
793-5566	572
793-5569	572
793-5570	572
793-5571	572
793-5572	572
793-5573	572
793-5574	576
793-5575	576
793-5576	576
793-5577	576
793-5578	576
793-5579	576
793-5580	576
793-5581	576
793-5582	576
793-5583	576
793-5599	572
793-5602	573
793-5603	573
793-5604	573
793-5605	573
793-5606	573
793-5607	573
793-5608	573
793-5609	573
793-5610	573
793-5611	573
793-5612	573
793-5613	573
793-5614	573
793-5615	573
793-5616	573
793-5617	573
793-5618	575
793-5619	575
793-5620	575
793-5621	575
793-5622	575
793-5623	575
793-5624	575
793-5625	575
793-5626	575
793-5627	575
793-5643	577
793-5644	577
793-5645	577
793-5646	577
793-5647	577
793-5648	577
793-5652	577
793-5653	579
793-5654	579
793-5655	579
793-5656	579
793-5657	579
793-5658	579
793-5659	579
793-5662	579
793-5663	579
793-5664	579
793-5666	573
793-5667	573
793-5668	573
793-5669	573
793-5670	573
793-5671	573
793-5672	573
793-5674	577
793-5675	577
793-5676	577
793-5677	577
793-5678	577
793-5679	577
793-5680	577
793-5681	577
793-5682	577
793-5683	577

Item No.	Page
793 Series	
793-5687	577
793-5688	573
793-5694	577
793-5695	577
793-5696	577
793-5697	577
793-5698	577
793-5699	573
793-5900	573
793-5901	573
793-5902	573
793-5903	573
793-5912	573
793-5913	573
793-5958	578
794 Series	
794-557	572
794-558	572
794-601	573
794-602	573
794-603	573
794-604	573
794-605	573
794-615	578
794-616	578
794-617	578
794-618	578
794-619	578
794-657	573
794-658	573
794-672	577
794-674	577
794-4601	573
794-4602	573
794-4603	573
794-4604	573
794-4605	573
794-4615	578
794-4616	578
794-4617	578
794-4618	578
794-4619	578
794-4672	577
794-4674	577
794-5553/000-002	93
794-5554/000-006	93
794-5557	572
794-5558	572
794-5601	573
794-5602	573
794-5603	573
794-5604	573
794-5605	573
794-5615	578
794-5616	578
794-5617	578
794-5618	578
794-5619	578
794-5657	573
794-5658	573
794-5672	577
794-5674	577
811 Series	
811-310	290
811-311	290
811-314	290
811-316	290
811-317	290
811-320	290
811-321	290
811-330	290
811-331	290

Item No.	Page
811 Series	
811-410	290
811-411	290
811-414	290
811-420	290
811-421	290
811-430	290
811-431	290
811-471	291
811-472	291
811-473	291
811-474	291
811-475	291
811-476	291
811-477	291
811-478	291
811-479	291
811-480	291
811-481	291
811-482	291
811-612	291
812 Series	
812-100	521
812-101	521
812-102	521
812-103	521
812-104	521
812-110	521
812-111	521
812-112	521
812-113	521
812-114	521
812-140	521
812-141	521
859 Series	
859-500	150
862 Series	
862-482	462
862-503	463
862-504	464
862-505	465
862-515	465
862-525	465
862-532	462
862-533	463
862-534	464
862-552	462
862-562	462
862-593	463
862-594	464
862-603	463
862-604	464
862-605	465
862-615	465
862-625	465
862-632	462
862-633	463
862-634	464
862-652	462
862-662	462
862-693	463
862-694	464
862-1503	463
862-1503/999-950	463
862-1504	464
862-1504/999-950	464
862-1505	465
862-1505/999-950	465
862-1515	465
862-1515/999-950	465
862-1525	465
862-1525/999-950	465
862-1532	462
862-1532/999-950	462

Item No.	Page
862 Series	
862-1533	463
862-1533/999-950	463
862-1534	464
862-1534/999-950	464
862-1552	462
862-1552/999-950	462
862-1562	462
862-1562/999-950	462
862-1593	463
862-1593/999-950	463
862-1594	464
862-1594/999-950	464
862-1603	463
862-1603/999-950	463
862-1604	464
862-1604/999-950	464
862-1605	465
862-1605/999-950	465
862-1615	465
862-1615/999-950	465
862-1625	465
862-1625/999-950	465
862-1632	462
862-1632/999-950	462
862-1633	463
862-1633/999-950	463
862-1634	464
862-1634/999-950	464
862-1652	462
862-1652/999-950	462
862-1662	462
862-1662/999-950	462
862-1693	463
862-1693/999-950	463
862-1694	464
862-1694/999-950	464
862-2503	463
862-2504	464
862-2505	465
862-2515	465
862-2525	465
862-2532	462
862-2533	463
862-2534	464
862-2552	462
862-2562	462
862-2593	463
862-2594	464
862-2603	463
862-2604	464
862-2605	465
862-2615	465
862-2625	465
862-2632	462
862-2633	463
862-2634	464
862-2652	462
862-2662	462
862-2693	463
862-2694	464
862-8503	463
862-8504	464
862-8505	465
862-8515	465
862-8525	465
862-8533	463
862-8534	464
862-8593	463
862-8594	464
862-8603	463
862-8604	464
862-8605	465
862-8615	465
862-8625	465
862-8633	463
862-8634	464

Item No.	Page
862 Series	
862-8693	463
862-8694	464
862-9503	463
862-9504	464
862-9505	465
862-9515	465
862-9525	465
862-9533	463
862-9534	464
862-9593	463
862-9594	464
862-9603	463
862-9604	464
862-9605	465
862-9615	465
862-9625	465
862-9633	463
862-9634	464
862-9693	463
862-9694	464
869 Series	
869-102	431
869-103	431
869-104	431
869-105	431
869-106	431
869-107	431
869-108	431
869-109	431
869-110	431
869-111	431
869-112	431
869-132	431
869-133	431
869-134	431
869-135	431
869-136	431
869-137	431
869-138	431
869-139	431
869-140	431
869-141	431
869-142	431
869-152	431
869-153	431
869-154	431
869-155	431
869-156	431
869-157	431
869-158	431
869-159	431
869-160	431
869-161	431
869-162	431
869-182	431
869-183	431
869-184	431
869-185	431
869-186	431
869-187	431
869-188	431
869-189	431
869-190	431
869-191	431
869-192	431
869-202	431
869-203	431
869-204	431
869-205	431
869-206	431
869-207	431
869-208	431
869-209	431
869-210	431
869-211	431
869-212	431
869-232	431

Item No.	Page
869 Series	
869-233	431
869-234	431
869-235	431
869-236	431
869-237	431
869-238	431
869-239	431
869-240	431
869-241	431
869-242	431
869-301	432
869-304	432
869-307	432
869-309	432
869-311	433
869-314	433
869-316	433
869-317	433
869-319	433
869-321	432
869-324	432
869-326	432
869-327	432
869-328	432
869-329	432
869-331	432
869-334	432
869-337	432
869-339	432
869-341	432
869-344	432
869-347	432
869-349	432
869-351	432
869-354	432
869-357	432
869-359	432
869-375	432
869-377	432
869-378	432
869-379	432
869-385	432
869-387	432
869-388	432
869-389	432
869-395	432
869-397	432
869-398	432
869-399	432
870 Series	
870-101	372
870-102	372
870-103	372
870-104	372
870-107	372
870-108	372
870-109	372
870-117	372
870-118	372
870-119	372
870-127	372
870-131	378
870-137	378
870-138	378
870-148	378
870-149	378
870-151	376
870-157	376
870-158	376
870-168	376
870-169	376
870-182	417
870-183	417
870-184	417
870-402	372
870-403	372
870-404	372
870-405	372

Item Number Index

Item No.	Page
870 Series	
870-406	372
870-407	372
870-408	372
870-409	372
870-410	372
870-425	423
870-426	423
870-427	423
870-433	372
870-434	372
870-435	372
870-436	372
870-437	372
870-438	372
870-439	372
870-440	372
870-501	414
870-502	414
870-503	414
870-504	414
870-507	414
870-508	414
870-509	414
870-517	414
870-518	414
870-519	414
870-527	414
870-531	415
870-532	415
870-533	415
870-534	415
870-535	415
870-536	415
870-537	415
870-538	415
870-539	415
870-540/281-410	418
870-540/281-411	418
870-541/281-489	418
870-541/281-490	418
870-541/281-491	418
870-541/281-492	418
870-542/281-487	418
870-542/281-488	418
870-543/281-413	418
870-543/281-434	418
870-551	416
870-553	416
870-556	416
870-557	416
870-558	416
870-559	416
870-567	416
870-568	416
870-569	416
870-573	415
870-574	415
870-577	416
870-590/281-410	420
870-590/281-411	420
870-590/281-675	420
870-590/281-676	420
870-593/281-413	421
870-593/281-434	421
870-596/281-673	420
870-596/281-674	420
870-681	412
870-682	412
870-684	412
870-687	412
870-826	413
870-831	412
870-832	412
870-834	412
870-837	412
870-901	412
870-902	412

Item No.	Page
870 Series	
870-904	412
870-907	412
870-907/999-950	412
870-909	412
870-911	413
870-912	413
870-914	413
870-917	413
870-919	413
870-923	412
870-924	412
870-925	412
870-926	412
870-928	412
870-929	412
870-933	412
870-934	412
870-943	412
870-944	412
870-946	412
870-947	412
870-948	412
870-949	412
870-951	416
870-957/999-950	416
870-961	414
870-967/999-950	414
870-1131	374
870-1137	374
870-1148	374
870-1149	374
873 Series	
873-902	550
873-903	550
873-953	551
880 Series	
880-308	224
880-309	224
880-325	224
880-326	224
880-328	224
880-329	224
880-339	224
880-340	224
880-344	224
880-345	224
880-346	224
880-347	224
880-681/999-940	224
880-682/999-940	224
880-684/999-940	224
880-687/999-940	224
880-831/999-940	224
880-832/999-940	224
880-834/999-940	224
880-837/999-940	224
880-901/999-940	224
880-902/999-940	224
880-904/999-940	224
880-907/999-940	224
887 Series	
887-912	546
887-913	546
2000 Series	
2000-121	43
2000-115	28
2000-402	28
2000-402/000-005	134
2000-402/000-006	134
2000-402/000-018	134

Item No.	Page
2000 Series	
2000-403	28
2000-403/000-005	134
2000-403/000-006	134
2000-404	28
2000-404/000-005	134
2000-404/000-006	134
2000-405	28
2000-405/000-005	134
2000-405/000-006	134
2000-405/011-000	135
2000-406	28
2000-406/000-005	134
2000-406/000-006	134
2000-406/020-000	135
2000-407	28
2000-407/000-005	134
2000-407/000-006	134
2000-408	28
2000-408/000-005	134
2000-408/000-006	134
2000-409	28
2000-409/000-005	134
2000-409/000-006	134
2000-410	28
2000-410/000-005	134
2000-410/000-006	134
2000-433	28
2000-434	28
2000-435	28
2000-436	28
2000-437	28
2000-438	28
2000-439	28
2000-440	28
2000-492	139
2000-510	128
2000-511	128
2000-549	128
2000-552	128
2000-553	128
2000-554	128
2000-555	128
2000-556	128
2000-557	128
2000-558	128
2000-559	128
2000-560	128
2000-1201	28
2000-1202	28
2000-1203	28
2000-1204	28
2000-1205	28
2000-1206	28
2000-1207	28
2000-1291	28
2000-1292	28
2000-1301	28
2000-1302	28
2000-1303	28
2000-1304	28
2000-1305	28
2000-1306	28
2000-1307	28
2000-1391	28
2000-1392	28
2000-1401	28
2000-1402	28
2000-1403	28
2000-1404	28
2000-1405	28
2000-1406	28
2000-1407	28
2000-1491	28
2000-1492	28
2000-2141	29
2000-2195	29

Item No.	Page
2000 Series	
2000-2196	29
2000-2201	42
2000-2201/099-000	44
2000-2202	42
2000-2202/099-000	44
2000-2203	42
2000-2203/099-000	44
2000-2204	42
2000-2204/099-000	44
2000-2207	42
2000-2207/099-000	44
2000-2208	42
2000-2208/099-000	44
2000-2209	42
2000-2209/099-000	44
2000-2217	42
2000-2217/099-000	44
2000-2218	43
2000-2218/099-000	45
2000-2227	42
2000-2227/099-000	44
2000-2228	43
2000-2228/099-000	45
2000-2231	42
2000-2231/099-000	44
2000-2232	42
2000-2232/099-000	44
2000-2233	42
2000-2233/099-000	44
2000-2234	42
2000-2234/099-000	44
2000-2237	42
2000-2237/099-000	44
2000-2238	42
2000-2238/099-000	44
2000-2239	42
2000-2239/099-000	44
2000-2247	42
2000-2247/099-000	44
2000-2248	43
2000-2248/099-000	45
2000-2257	42
2000-2257/099-000	44
2000-2258	43
2000-2258/099-000	45
2000-2291	43
2000-2292	43
2000-5310/101-000	104
2000-5310/102-000	104
2000-5310/1101-951	104
2000-5310/1102-950	104
2000-5311	102
2000-5311/1101-951	102
2000-5311/1102-950	102
2000-5317/101-000	104
2000-5317/102-000	104
2000-5317/1101-951	104
2000-5317/1102-950	104
2000-5352	102
2000-5352/1102-953	102
2000-5357/101-000	104
2000-5357/102-000	104
2000-5372	102
2000-5372/1102-953	102
2000-5377/101-000	104
2000-5377/102-000	104
2000-5391	102
2000-5410	103
2000-5410/1101-951	103
2000-5410/1102-950	103
2000-5417	103
2000-5417/1101-951	103
2000-5417/1102-950	103
2000-5457	103
2000-5457/1102-953	103
2000-5477	103
2000-5477/1102-953	103
2000-5491	103

Item No.	Page
2001 Series	
2001-115	30
2001-171	30
2001-402	30
2001-403	30
2001-404	30
2001-405	30
2001-405/011-000	135
2001-406	30
2001-406/020-000	135
2001-407	30
2001-408	30
2001-409	30
2001-410	30
2001-433	30
2001-434	30
2001-435	30
2001-436	30
2001-437	30
2001-438	30
2001-439	30
2001-440	30
2001-511	128
2001-549	128
2001-552	128
2001-553	128
2001-554	128
2001-555	128
2001-556	128
2001-557	128
2001-558	128
2001-559	128
2001-560	128
2001-1201	30
2001-1202	30
2001-1203	30
2001-1204	30
2001-1205	30
2001-1206	30
2001-1207	30
2001-1208	30
2001-1211/1000-410	110
2001-1211/1000-411	110
2001-1301	30
2001-1302	30
2001-1303	30
2001-1304	30
2001-1305	30
2001-1306	30
2001-1307	30
2001-1308	30
2001-1311/1000-410	110
2001-1311/1000-411	110
2001-1321/1000-413	110
2001-1321/1000-434	110
2001-1401	30
2001-1402	30
2001-1403	30
2001-1404	30
2001-1405	30
2001-1406	30
2001-1407	30
2001-1408	30
2001-1411/1000-410	110
2001-1411/1000-411	110
2001-1421/1000-413	110
2001-1421/1000-434	110
2001-1441	31
2002 Series	
2002-115	32
2002-116	124
2002-121	47
2002-131	59
2002-161	143
2002-171	32
2002-172	32

Item No.	Page
2002 Series	
2002-191	60
2002-192	60
2002-194	60
2002-400	137
2002-401	140
2002-402	32
2002-402/000-005	134
2002-402/000-006	134
2002-403	32
2002-403/000-005	134
2002-403/000-006	134
2002-404	32
2002-404/000-005	134
2002-404/000-006	134
2002-405	32
2002-405/000-005	134
2002-405/000-006	134
2002-405/011-000	135
2002-406	32
2002-406/000-005	134
2002-406/000-006	134
2002-406/020-000	135
2002-407	32
2002-407/000-005	134
2002-407/000-006	134
2002-408	32
2002-408/000-005	134
2002-408/000-006	134
2002-409	32
2002-409/000-005	134
2002-409/000-006	134
2002-410	32
2002-410/000-005	134
2002-410/000-006	134
2002-423	137
2002-423/000-005	137
2002-423/000-006	137
2002-433	32
2002-434	32
2002-435	32
2002-436	32
2002-437	32
2002-438	32
2002-439	32
2002-440	32
2002-472	33
2002-473	33
2002-473/011-000	33
2002-474	33
2002-475	33
2002-475/011-000	33
2002-476	33
2002-477	33
2002-477/011-000	33
2002-478	33
2002-479	33
2002-479/011-000	33
2002-480	33
2002-481	33
2002-481/011-000	33
2002-482	33
2002-492	139
2002-492/000-012	139
2002-493	139
2002-511	128
2002-541	128
2002-549	128
2002-552	128
2002-553	128
2002-554	128
2002-555	128
2002-556	128
2002-557	128
2002-558	128
2002-559	128
2002-560	128
2002-611	132
2002-641	132

Item No.	Page
2002 Series	
2002-649	132
2002-800	124
2002-800/1000-410	120
2002-800/1000-411	120
2002-800/1000-541	122
2002-800/1000-542	122
2002-800/1000-836	122
2002-810	124
2002-820	124
2002-880	121
2002-880/1000-411	121
2002-880/1000-541	123
2002-880/1000-542	123
2002-880/1000-836	123
2002-991	72
2002-992	72
2002-1091	57
2002-1092	57
2002-1201	32
2002-1202	32
2002-1203	32
2002-1204	32
2002-1205	32
2002-1206	32
2002-1207	32
2002-1208	32
2002-1211/1000-410	112
2002-1211/1000-411	112
2002-1291	30
2002-1292	30
2002-1293	30
2002-1294	30
2002-1301	32
2002-1302	32
2002-1303	32
2002-1304	32
2002-1305	32
2002-1306	32
2002-1307	32
2002-1308	32
2002-1311/1000-410	112
2002-1311/1000-411	112
2002-1321/1000-413	112
2002-1321/1000-434	112
2002-1391	30
2002-1392	30
2002-1393	30
2002-1394	30
2002-1401	32
2002-1402	32
2002-1403	32
2002-1404	32
2002-1405	32
2002-1406	32
2002-1407	32
2002-1408	32
2002-1411/1000-410	112
2002-1411/1000-411	112
2002-1421/1000-413	112
2002-1421/1000-434	112
2002-1441	33
2002-1491	30
2002-1492	30
2002-1493	30
2002-1494	30
2002-1601	64
2002-1602	64
2002-1604	64
2002-1611	72
2002-1611/1000-541	72
2002-1611/1000-542	72
2002-1611/1000-836	72
2002-1611/1000-867	72
2002-1661	96

Item No.	Page
2002 Series	
2002-1671	64
2002-1671/401-000	64
2002-1672	64
2002-1672/401-000	64
2002-1674	64
2002-1674/401-000	64
2002-1681	70
2002-1691	64
2002-1692	64
2002-1701	66
2002-1702	66
2002-1704	66
2002-1707	66
2002-1711	72
2002-1711/1000-541	72
2002-1711/1000-542	72
2002-1711/1000-836	72
2002-1711/1000-867	72
2002-1761	96
2002-1771	66
2002-1771/401-000	66
2002-1772	66
2002-1772/401-000	66
2002-1774	66
2002-1774/401-000	66
2002-1781	70
2002-1791	66
2002-1792	66
2002-1801	68
2002-1802	68
2002-1804	68
2002-1811	72
2002-1811/1000-541	72
2002-1811/1000-542	72
2002-1811/1000-836	72
2002-1811/1000-867	72
2002-1861	96
2002-1871	68
2002-1871/401-000	68
2002-1872	68
2002-1872/401-000	68
2002-1874	68
2002-1874/401-000	68
2002-1881	70
2002-1891	68
2002-1892	68
2002-1901	74
2002-1902	74
2002-1904	74
2002-1907	74
2002-1911	78
2002-1911/1000-541	78
2002-1911/1000-542	78
2002-1911/1000-836	78
2002-1911/1000-867	78
2002-1961	96
2002-1971	74
2002-1971/401-000	74
2002-1972	74
2002-1972/401-000	74
2002-1974	74
2002-1974/401-000	74
2002-1981	77
2002-1981/1000-413	76
2002-1981/1000-414	76
2002-1981/1000-429	76
2002-1981/1000-434	76
2002-1981/1000-435	76
2002-1981/1000-449	76
2002-1991	74
2002-1992	74
2002-2201	46
2002-2201/097-000	50
2002-2201/098-000	50
2002-2201/099-000	48
2002-2202	46
2002-2202/099-000	48

Item Number Index

Item No.	Page
2002 Series	
2002-2203	46
2002-2203/099-000	48
2002-2204	46
2002-2204/099-000	48
2002-2207	46
2002-2207/099-000	48
2002-2208	46
2002-2208/099-000	48
2002-2209	46
2002-2209/099-000	48
2002-2211/1000-410	116
2002-2211/1000-411	116
2002-2213/1000-487	116
2002-2213/1000-488	116
2002-2214/1000-489	116
2002-2214/1000-490	116
2002-2214/1000-491	116
2002-2214/1000-492	116
2002-2217	46
2002-2217/099-000	48
2002-2218	47
2002-2218/099-000	49
2002-2221/1000-413	116
2002-2221/1000-434	116
2002-2227	46
2002-2227/099-000	48
2002-2228	47
2002-2228/099-000	49
2002-2231	46
2002-2231/099-000	48
2002-2232	46
2002-2232/099-000	48
2002-2233	46
2002-2233/099-000	48
2002-2234	46
2002-2234/099-000	48
2002-2237	46
2002-2237/099-000	48
2002-2238	46
2002-2238/099-000	48
2002-2239	46
2002-2239/099-000	48
2002-2247	46
2002-2247/099-000	48
2002-2248	47
2002-2248/099-000	49
2002-2257	46
2002-2257/099-000	48
2002-2258	47
2002-2258/099-000	49
2002-2291	47
2002-2292	47
2002-2295	50
2002-2296	50
2002-2401	52
2002-2402	52
2002-2403	52
2002-2404	52
2002-2407	52
2002-2408	52
2002-2409	52
2002-2417	52
2002-2418	53
2002-2427	52
2002-2428	53
2002-2431	52
2002-2432	52
2002-2433	52
2002-2434	52
2002-2437	52
2002-2438	52
2002-2439	52
2002-2447	52
2002-2448	53
2002-2457	52
2002-2458	53
2002-2491	53
2002-2492	53
2002-2601	54

Item No.	Page
2002 Series	
2002-2602	54
2002-2603	54
2002-2604	54
2002-2607	54
2002-2608	54
2002-2609	54
2002-2611	57
2002-2611/1000-541	57
2002-2611/1000-542	57
2002-2611/1000-836	57
2002-2612	57
2002-2647	54
2002-2657	54
2002-2661	56
2002-2662	56
2002-2667	56
2002-2671	56
2002-2672	56
2002-2678	56
2002-2691	55
2002-2692	55
2002-2701	51
2002-2702	51
2002-2703	51
2002-2704	51
2002-2707	51
2002-2708	51
2002-2709	51
2002-2717	51
2002-2727	51
2002-2791	51
2002-2792	51
2002-2941	192
2002-2951	62
2002-2952	62
2002-2954	62
2002-2958	62
2002-2959	62
2002-2961	96
2002-2963	96
2002-2971	62
2002-2972	62
2002-2974	62
2002-2991	62
2002-2992	96
2002-3201	58
2002-3203	58
2002-3204	58
2002-3207	58
2002-3208	58
2002-3209	58
2002-3211/1000-410	118
2002-3211/1000-411	118
2002-3211/1000-675	118
2002-3211/1000-676	118
2002-3212/1000-673	118
2002-3212/1000-674	118
2002-3217	58
2002-3218	59
2002-3221/1000-413	118
2002-3221/1000-434	118
2002-3227	58
2002-3228	59
2002-3231	58
2002-3233	58
2002-3234	58
2002-3237	58
2002-3238	58
2002-3239	58
2002-3247	58
2002-3248	59
2002-3257	58
2002-3258	59
2002-3291	59
2002-3292	59
2002-4101	60
2002-4111	60

Item No.	Page
2002 Series	
2002-4127	60
2002-4131	60
2002-4141	60
2002-4157	60
2002-4191	60
2002-4192	60
2002-6301	34
2002-6302	34
2002-6303	34
2002-6304	34
2002-6305	34
2002-6306	34
2002-6307	34
2002-6308	34
2002-6391	34
2002-6392	34
2002-6401	35
2002-6402	35
2002-6403	35
2002-6404	35
2002-6405	35
2002-6406	35
2002-6407	35
2002-7111	196
2002-7114	196
2002-7192	196
2002-7211	196
2002-7214	196
2002-7292	196
2003 Series	
2003-499	190
2003-500	190
2003-911	192
2003-911/1000-923	192
2003-6640	190
2003-6641	190
2003-6642	190
2003-6643	190
2003-6644	190
2003-6645	190
2003-6646	190
2003-6649	190
2003-6650	190
2003-6651	190
2003-6660	190
2003-6692	191
2003-6693	190
2003-6694	192
2003-7300	188
2003-7640	188
2003-7641	188
2003-7642	188
2003-7645	188
2003-7646	188
2003-7649	188
2003-7650	188
2003-7651	188
2003-7659	188
2003-7692	188
2004 Series	
2004-115	36
2004-171	36
2004-172	36
2004-402	36
2004-403	36
2004-404	36
2004-405	36
2004-405/011-000	135
2004-406	36

Item No.	Page
2004 Series	
2004-406/020-000	135
2004-407	36
2004-408	36
2004-409	36
2004-410	36
2004-433	36
2004-434	36
2004-435	36
2004-436	36
2004-437	36
2004-438	36
2004-439	36
2004-440	36
2004-511	130
2004-541	130
2004-549	130
2004-552	130
2004-553	130
2004-554	130
2004-555	130
2004-911	96
2004-911/1000-541	96
2004-911/1000-542	96
2004-911/1000-836	96
2004-911/1000-867	96
2004-1201	36
2004-1202	36
2004-1203	36
2004-1204	36
2004-1205	36
2004-1206	36
2004-1207	36
2004-1211/1000-400	114
2004-1211/1000-401	114
2004-1291	36
2004-1292	36
2004-1293	36
2004-1294	36
2004-1301	36
2004-1302	36
2004-1303	36
2004-1304	36
2004-1305	36
2004-1306	36
2004-1307	36
2004-1311/1000-400	114
2004-1311/1000-401	114
2004-1391	36
2004-1392	36
2004-1393	36
2004-1394	36
2004-1401	36
2004-1402	36
2004-1403	36
2004-1404	36
2004-1405	36
2004-1406	36
2004-1407	36
2004-1408	36
2004-1411/1000-400	114
2004-1411/1000-401	114
2004-1491	36
2004-1492	36
2004-1493	36
2004-1494	36
2005 Series	
2005-7300	194
2005-7641	194
2005-7642	194
2005-7645	194
2005-7646	194
2005-7649	194
2005-7692	194

Item No.	Page
2006 Series	
2006-115	38
2006-191	141
2006-401	140
2006-401/000-050	140
2006-402	38
2006-403	38
2006-404	38
2006-405	38
2006-405/011-000	135
2006-433	38
2006-434	38
2006-435	38
2006-451	140
2006-499	30
2006-511	130
2006-549	130
2006-911	98
2006-911/1000-541	98
2006-911/1000-542	98
2006-911/1000-836	98
2006-911/1000-867	98
2006-921	98
2006-921/1000-541	98
2006-921/1000-542	98
2006-921/1000-836	98
2006-921/1000-859	98
2006-921/1000-867	98
2006-931	98
2006-931/099-000	98
2006-931/1000-541	98
2006-931/1000-542	98
2006-931/1000-836	98
2006-931/1000-859	98
2006-931/1000-867	98
2006-931/1099-541	99
2006-931/1099-542	99
2006-931/1099-836	99
2006-931/1099-859	99
2006-931/1099-867	99
2006-991	84
2006-992	84
2006-1201	38
2006-1202	38
2006-1204	38
2006-1207	38
2006-1208	38
2006-1291	38
2006-1292	38
2006-1293	38
2006-1294	38
2006-1301	38
2006-1302	38
2006-1304	38
2006-1307	38
2006-1391	38
2006-1392	38
2006-1393	38
2006-1394	38
2006-1601	80
2006-1604	80
2006-1611	84
2006-1611/1000-541	84
2006-1611/1000-542	84
2006-1611/1000-836	84
2006-1611/1000-867	84
2006-1621	84
2006-1621/1000-541	84
2006-1621/1000-542	84
2006-1621/1000-836	84
2006-1621/1000-859	84
2006-1621/1000-867	84
2006-1631	84
2006-1631/099-000	85
2006-1631/1000-541	84
2006-1631/1000-542	84

Item No.	Page
2006 Series	
2006-1631/1000-836	84
2006-1631/1000-859	84
2006-1631/1000-867	84
2006-1631/1099-541	85
2006-1631/1099-542	85
2006-1631/1099-836	85
2006-1631/1099-859	85
2006-1631/1099-867	85
2006-1661	98
2006-1671	80
2006-1671/1000-848	80
2006-1671/1000-849	80
2006-1671/1000-850	80
2006-1671/1000-851	80
2006-1674	80
2006-1681	83
2006-1681/1000-413	82
2006-1681/1000-414	82
2006-1681/1000-429	82
2006-1681/1000-434	82
2006-1681/1000-435	82
2006-1681/1000-449	82
2006-1691	80
2006-1692	80
2006-1695	98
2006-1696	98
2006-7111	196
2006-7114	196
2006-7192	196
2006-7300	196
2006-8401	86
2006-8601	86
2006-8604	86
2006-8661	86
2006-8664	86
2006-8671	86
2006-8674	86
2006-8691	86
2006-8692	86
2007 Series	
2007-8442	92
2007-8443	92
2007-8444	92
2007-8445	92
2007-8446	92
2007-8447	92
2007-8448	92
2007-8801	92
2007-8804	92
2007-8807	93
2007-8811	92
2007-8821	92
2007-8873	94
2007-8876	95
2007-8891	92
2007-8892	92
2007-8893	92
2007-8894	92
2007-8899	92
2009 Series	
2009-110	142
2009-113	142
2009-114	142
2009-115	142
2009-145	580
2009-163	583
2009-174	133
2009-180	137
2009-182	133
2009-191	143
2009-192	143
2009-193	143
2009-196	143

Item No.	Page
2009 Series	
2009-198	143
2009-304	188
2009-305	188
2009-309	189
2009-310	189
2009-402	138
2009-404	138
2009-406	138
2009-412	138
2009-414	138
2009-416	138
2010 Series	
2010-100	39
2010-115	39
2010-402	39
2010-403	39
2010-404	39
2010-405	39
2010-405/011-000	135
2010-433	39
2010-434	39
2010-435	39
2010-511	130
2010-549	130
2010-1201	39
2010-1202	39
2010-1204	39
2010-1207	39
2010-1208	39
2010-1291	39
2010-1292	39
2010-1301	39
2010-1302	39
2010-1304	39
2010-1307	39
2010-1391	39
2010-1392	39
2016 Series	
2016-100	40
2016-115	40
2016-402	40
2016-403	40
2016-404	40
2016-405	40
2016-405/011-000	135
2016-433	40
2016-434	40
2016-435	40
2016-499	39
2016-511	131
2016-549	131
2016-1201	40
2016-1202	40
2016-1204	40
2016-1207	40
2016-1208	40
2016-1291	40
2016-1292	40
2016-1301	40
2016-1302	40
2016-1304	40
2016-1307	40
2016-1391	40
2016-1392	40
2016-7111	196
2016-7114	196
2016-7192	196

Item No.	Page
2016 Series	
2016-7601	198
2016-7604	198
2016-7607	198
2016-7608	506
2016-7611	506
2016-7691	198
2016-7692	198
2016-7711	198
2016-7714	198
2016-7792	198
2020 Series	
2020-100	150
2020-102	154
2020-102/122-000	162
2020-102/132-000	162
2020-102/142-000	162
2020-103	154
2020-103/000-036	158
2020-103/000-037	158
2020-103/000-038	158
2020-103/000-039	159
2020-103/122-000	162
2020-103/132-000	162
2020-103/142-000	162
2020-104	154
2020-104/000-036	158
2020-104/000-037	158
2020-104/000-038	158
2020-104/000-039	159
2020-104/124-000	162
2020-104/133-000	162
2020-104/143-000	162
2020-105	154
2020-105/000-036	158
2020-105/000-037	158
2020-105/000-038	158
2020-105/000-039	159
2020-105/124-000	162
2020-105/133-000	162
2020-105/143-000	162
2020-106	154
2020-106/000-036	158
2020-106/000-037	158
2020-106/000-038	158
2020-106/000-039	159
2020-106/124-000	162
2020-106/133-000	162
2020-106/143-000	162
2020-107	154
2020-107/000-036	158
2020-107/000-037	158
2020-107/000-038	158
2020-107/000-039	159
2020-107/124-000	162
2020-107/134-000	162
2020-107/144-000	162
2020-108	154
2020-108/000-036	158
2020-108/000-037	158
2020-108/000-038	158
2020-108/000-039	159
2020-108/124-000	162
2020-108/134-000	162
2020-108/144-000	162
2020-109	154
2020-109/000-036	158
2020-109/000-037	158
2020-109/000-038	158
2020-109/000-039	159
2020-109/124-000	162
2020-109/134-000	162
2020-109/144-000	162
2020-110	154
2020-110/000-036	158
2020-110/000-037	158
2020-110/000-038	158
2020-110/000-039	159
2020-110/125-000	162
2020-110/135-000	162

Item Number Index

Item No.	Page
2020 Series	
2020-110/145-000	162
2020-111	154
2020-111/000-036	158
2020-111/000-037	158
2020-111/000-038	158
2020-111/000-039	159
2020-111/125-000	162
2020-111/135-000	162
2020-111/145-000	162
2020-112	154
2020-112/000-036	158
2020-112/000-037	158
2020-112/000-038	158
2020-112/000-039	159
2020-112/125-000	162
2020-112/135-000	162
2020-112/145-000	162
2020-113	154
2020-113/000-036	158
2020-113/000-037	158
2020-113/000-038	158
2020-113/000-039	159
2020-113/125-000	162
2020-113/135-000	162
2020-113/145-000	162
2020-114	154
2020-114/000-036	158
2020-114/000-037	158
2020-114/000-038	158
2020-114/000-039	159
2020-114/125-000	162
2020-114/135-000	162
2020-114/145-000	162
2020-115	154
2020-115/000-036	158
2020-115/000-037	158
2020-115/000-038	158
2020-115/000-039	159
2020-115/125-000	162
2020-115/135-000	162
2020-115/145-000	162
2020-161	156
2020-164	156
2020-167	156
2020-181	156
2020-184	156
2020-187	156
2020-202	154
2020-202/122-000	164
2020-202/132-000	164
2020-202/142-000	164
2020-203	154
2020-203/000-036	160
2020-203/000-037	160
2020-203/000-038	160
2020-203/000-039	161
2020-203/122-000	164
2020-203/132-000	164
2020-203/142-000	164
2020-204	154
2020-204/000-036	160
2020-204/000-037	160
2020-204/000-038	160
2020-204/000-039	161
2020-204/124-000	164
2020-204/133-000	164
2020-204/143-000	164
2020-205	154
2020-205/000-036	160
2020-205/000-037	160
2020-205/000-038	160
2020-205/000-039	161
2020-205/124-000	164
2020-205/133-000	164
2020-205/143-000	164
2020-206	154
2020-206/000-036	160
2020-206/000-037	160
2020-206/000-038	160
2020-206/000-039	161

Item No.	Page
2020 Series	
2020-206/124-000	164
2020-206/133-000	164
2020-206/143-000	164
2020-207	154
2020-207/000-036	160
2020-207/000-037	160
2020-207/000-038	160
2020-207/000-039	161
2020-207/124-000	164
2020-207/134-000	164
2020-207/144-000	164
2020-208	154
2020-208/000-036	160
2020-208/000-037	160
2020-208/000-038	160
2020-208/000-039	161
2020-208/124-000	164
2020-208/134-000	164
2020-208/144-000	164
2020-209	154
2020-209/000-036	160
2020-209/000-037	160
2020-209/000-038	160
2020-209/000-039	161
2020-209/124-000	164
2020-209/134-000	164
2020-209/144-000	164
2020-210	154
2020-210/000-036	160
2020-210/000-037	160
2020-210/000-038	160
2020-210/000-039	161
2020-210/125-000	164
2020-210/135-000	164
2020-210/145-000	164
2020-211	154
2020-211/000-036	160
2020-211/000-037	160
2020-211/000-038	160
2020-211/000-039	161
2020-211/125-000	164
2020-211/135-000	164
2020-211/145-000	164
2020-212	154
2020-212/000-036	160
2020-212/000-037	160
2020-212/000-038	160
2020-212/000-039	161
2020-212/125-000	164
2020-212/135-000	164
2020-212/145-000	164
2020-213	154
2020-213/000-036	160
2020-213/000-037	160
2020-213/000-038	160
2020-213/000-039	161
2020-213/125-000	164
2020-213/135-000	164
2020-213/145-000	164
2020-214	154
2020-214/000-036	160
2020-214/000-037	160
2020-214/000-038	160
2020-214/000-039	161
2020-214/125-000	164
2020-214/135-000	164
2020-214/145-000	164
2020-215	154
2020-215/000-036	160
2020-215/000-037	160
2020-215/000-038	160
2020-215/000-039	161
2020-215/125-000	164
2020-215/135-000	164
2020-215/145-000	164
2020-261	156
2020-264	156
2020-267	156
2020-281	156
2020-284	156
2020-287	156

Item No.	Page
2020 Series	
2020-1201	150
2020-1204	150
2020-1207	150
2020-1291	150
2020-1292	150
2020-1301	150
2020-1304	150
2020-1307	150
2020-1391	150
2020-1392	150
2020-1401	150
2020-1404	150
2020-1407	150
2020-1491	150
2020-1492	150
2020-2201	152
2020-2202	152
2020-2203	152
2020-2204	152
2020-2207	152
2020-2208	152
2020-2209	152
2020-2217	152
2020-2227	152
2020-2231	152
2020-2232	152
2020-2233	152
2020-2234	152
2020-2237	152
2020-2238	152
2020-2239	152
2020-2247	152
2020-2257	152
2020-2291	153
2020-2292	153
2020-5311	107
2020-5311/1102-950	107
2020-5317/102-000	109
2020-5317/1102-950	109
2020-5372	107
2020-5372/1102-953	107
2020-5377/102-000	109
2020-5391	107
2020-5417	108
2020-5417/1102-950	108
2020-5477	108
2020-5477/1102-953	108
2020-5491	108
2022 Series	
2022-100	166
2022-101	170
2022-101/000-016	170
2022-101/122-000	176
2022-101/122-006	176
2022-101/122-016	176
2022-101/132-000	176
2022-101/132-006	176
2022-101/132-016	176
2022-101/142-000	176
2022-101/142-006	176
2022-101/142-016	176
2022-102	170
2022-102/000-016	170
2022-102/122-000	176
2022-102/132-000	176
2022-102/142-000	176
2022-102/999-953	182
2022-103	170
2022-103/000-036	174
2022-103/000-037	174
2022-103/000-038	174
2022-103/000-038/999-953	183
2022-103/000-039	175
2022-103/000-039/999-953	183
2022-103/123-000	176

Item No.	Page
2022 Series	
2022-103/133-000	176
2022-103/143-000	176
2022-103/999-953	182
2022-104	170
2022-104/000-036	174
2022-104/000-037	174
2022-104/000-038	174
2022-104/000-038/999-953	183
2022-104/000-039	175
2022-104/000-039/999-953	183
2022-104/123-000	176
2022-104/133-000	176
2022-104/143-000	176
2022-104/999-953	182
2022-105	170
2022-105/000-036	174
2022-105/000-037	174
2022-105/000-038	174
2022-105/000-038/999-953	183
2022-105/000-039	175
2022-105/000-039/999-953	183
2022-105/123-000	176
2022-105/134-000	176
2022-105/144-000	176
2022-105/999-953	182
2022-106	170
2022-106/000-036	174
2022-106/000-037	174
2022-106/000-038	174
2022-106/000-038/999-953	183
2022-106/000-039	175
2022-106/000-039/999-953	183
2022-106/123-000	176
2022-106/134-000	176
2022-106/144-000	176
2022-106/999-953	182
2022-107	170
2022-107/000-036	174
2022-107/000-037	174
2022-107/000-038	174
2022-107/000-039	175
2022-107/123-000	176
2022-107/135-000	176
2022-107/145-000	176
2022-107/999-953	182
2022-108	170
2022-108/000-036	174
2022-108/000-037	174
2022-108/000-038	174
2022-108/000-039	175
2022-108/123-000	176
2022-108/135-000	176
2022-108/145-000	176
2022-108/999-953	182
2022-109	170
2022-109/000-036	174
2022-109/000-037	174
2022-109/000-038	174
2022-109/000-039	175
2022-109/123-000	176
2022-109/135-000	176
2022-109/145-000	176
2022-110	170
2022-110/000-036	174
2022-110/000-037	174
2022-110/000-038	174
2022-110/000-039	175
2022-110/123-000	176
2022-110/135-000	176
2022-110/145-000	176
2022-111	170
2022-111/000-036	174
2022-111/000-037	174
2022-111/000-038	174
2022-111/000-039	175
2022-111/126-000	176
2022-111/136-000	176
2022-111/146-000	176
2022-112	170
2022-112/000-036	174
2022-112/000-037	174

Item No.	Page
2022 Series	
2022-112/000-038	174
2022-112/000-039	175
2022-112/126-000	176
2022-112/136-000	176
2022-112/146-000	176
2022-113	170
2022-113/000-036	174
2022-113/000-037	174
2022-113/000-038	174
2022-113/000-039	175
2022-113/126-000	176
2022-113/136-000	176
2022-113/146-000	176
2022-114	170
2022-114/000-036	174
2022-114/000-037	174
2022-114/000-038	174
2022-114/000-039	175
2022-114/126-000	176
2022-114/136-000	176
2022-114/146-000	176
2022-115	170
2022-115/000-036	174
2022-115/000-037	174
2022-115/000-038	174
2022-115/000-039	175
2022-115/127-000	176
2022-115/137-000	176
2022-115/147-000	176
2022-141	154
2022-142	154
2022-151	154
2022-152	154
2022-161	172
2022-162	172
2022-164	172
2022-167	172
2022-171	172
2022-172	172
2022-174	172
2022-177	172
2022-181	172
2022-182	172
2022-184	172
2022-187	172
2022-1201	166
2022-1201/999-953	178
2022-1202	166
2022-1204	166
2022-1204/999-953	178
2022-1207	166
2022-1207/999-953	178
2022-1291	166
2022-1292	166
2022-1301	166
2022-1301/999-953	178
2022-1302	166
2022-1304	166
2022-1304/999-953	178
2022-1307	166
2022-1307/999-953	178
2022-1391	166
2022-1392	166
2022-1401	166
2022-1401/999-953	179
2022-1402	166
2022-1404	166
2022-1404/999-953	179
2022-1407	166
2022-1407/999-953	179
2022-1491	166
2022-1492	166
2022-2201	168
2022-2201/999-953	180
2022-2202	168
2022-2203	168
2022-2204	168

Item No.	Page
2022 Series	
2022-2207	168
2022-2207/999-953	180
2022-2208	168
2022-2209	168
2022-2217	168
2022-2227	168
2022-2231	168
2022-2232	168
2022-2233	168
2022-2234	168
2022-2234/999-953	180
2022-2237	168
2022-2238	168
2022-2239	168
2022-2247	168
2022-2257	168
2022-2291	169
2022-2292	169
2042 Series	
2042-341	126
2042-351	126
2073 Series	
2273-202	525
2273-203	525
2273-204	525
2273-205	525
2273-208	525
2273-500	525

Item No.	Page

Item No.	Page

WAGO Worldwide
Companies and Representatives

Algeria
please contact WAGO France

Argentina
Bruno Schillig S.A.
Arenales 4030, B1604CFD
Florida, PBA
Phone +54 11 4730 1100
Fax +54 11 4761 7244
wago@schillig.com.ar

Austria
WAGO Kontakttechnik Ges.m.b.H.
Europaring F15 602
Campus 21
2345 Brunn am Gebirge
Phone +43 1 6150780
Fax +43 1 6150775
wago-at@wago.com

Azerbaijan
AZ Technics LTD
Zulfi V. Alizade
Y.Safarov str.33, AZ1025,
Baku
Republic of Azerbaijan
Phone +994 50 210 24 49
Fax +994 12 496 83 34
info@AZtechnics.az

Australia
WAGO Pty. Ltd.
2-4 Overseas Drive
Noble Park Victoria 3174
Phone +61 03 8791 6300
Fax +61 03 9701 0177
sales.anz@wago.com

Bangladesh
please contact WAGO India

Belarus
OOO FEK
pr-t Pushkina 29-B
220015 Minsk
Phone +375 17 2102189
Fax +375 17 2102189
wago@fek.by

UP ATAVA
ul. Denisovskaya, 47, office 1
220006 Minsk
Phone +375 17 2054015
Fax +375 17 2851759

Belgium
WAGO BeLux nv
Excelsiorlaan 11
1930 Zaventem
Phone +32 2 717 9090
Fax +32 2 717 9099
info-be@wago.com

Bolivia
ISOTEK S.R.L.
Zona Casco Viejo
Calle Isso #578, B/San Roque
Santa Cruz
Phone +591 721 000 27

Bosnia and Herzegovina
please contact WAGO Bulgaria

Brazil
WAGO Eletroeletrônicos Ltda
Rua Américo Simões 1470
Sãu Roque da Chave
Itupeva SP Brasil 13295-000
Phone +55 11 4591 0199
Fax +55 11 4591 0190
info.br@wago.com

Bulgaria
WAGO Kontakttechnik GmbH & Co. KG/
Representative Office Sofia
Business Center Serdika
2E Akad. Ivan Geshov Blvd.
Building 1, Floor 4, Office 417
1330 Sofia
Phone +359 2 489 46 09/10
Fax +359 2 928 28 50
info-BG@wago.com

Canada
please contact WAGO USA

Chile
Desimat Chile
Av Puerto Vespucio 9670
Pudahuel Santiago
Phone +56 2 747 0152
Fax +56 2 747 0153
ventaschile@desimat.cl

China
WAGO Electronic (Tianjin) Co., Ltd.
No.5, Quan Hui Road
Wuqing Development Area
Tianjin 301700
Phone +86 22 5967 7688
Fax +86 22 5961 7668
info-cn@wago.com

Colombia
T.H.L. Ltda.
Cra. 49 B # 91-33
Bogotá
Phone +57 1 621 85 50
Fax +57 1 621 60 28
ventas-thl@thl-ltda.com

Croatia
M.B.A. d.o.o.
Frana Supila 5
51211 Matulji
Phone +385 51 275-736
Fax +385 51 275-066
mba@ri.htnet.hr

MICROSTAR d.o.o.
Siget 18 b
10020 Zagreb
Phone +385 1 3647 849
Fax +385 1 3636 662
wago@microstar.hr

Czech Republic
WAGO Elektro spol. sr. o.
Rozvodova 1116/36
143 00 Praha 4 - Modřany
Phone +420 261 090 143
Fax +420 261 090 144
info.cz@wago.com
wago-cz@wago.com

Denmark
WAGO Denmark A/S
Lejrvej 17
3500 Værløse
Phone +45 44 357 777
info.dk@wago.com

Egypt
IBN Engineering Instrumentation & Control
71 a El Shaheed Ahmed Hamdi St.
King Faisal, Giza
Phone +20 2 721 4350
Fax +20 2 722 1709
sales@ibnengineering.com

Ecuador
ECUAINSETEC CIA LTDA
Yugoslavia N34-110 y Azuay
Quito
Phone +593 2 24 50 475
Fax +593 2 22 51 242
g.castro@ecuainsetec.com.ec

Estonia
Eltarko OÜ
Laki 14 - 502
10621 Tallinn
Phone +372 651 7731
Fax +372 651 7786
andres@eltarko.ee

Finland
WAGO Finland Oy
Vellamonkatu 30 B
00550 Helsinki
Phone +358 9 7744 060
Fax +358 9 7744 0660
tilaus@wago.fi

France
WAGO Contact SAS
Paris Nord 2
83 Rue des Chardonnerets
B.P. 55065 - Tremblay en France
95947 - ROISSY CDG CEDEX
Phone +33 1 4817 2590
Fax +33 1 4863 2520
info-fr@wago.com

Germany
WAGO Kontakttechnik GmbH & Co. KG
Postfach 28 80, 32385 Minden
Hansastraße 27
32423 Minden
Phone +49 571 887-0
Fax +49 571 887-844169
info@wago.com

Germany
WAGO Kontakttechnik GmbH & Co. KG
Waldstraße 1
99706 Sondershausen
Phone +49 3632 659-0
Fax +49 3632 659-100
info@wago.com

Great Britain
WAGO Limited
Triton Park, Swift Valley Industrial Estate
RUGBY
Warwickshire, CV21 1SG
Phone +44 1788 568 008
Fax +44 1788 568 050
uksales@wago.com

Greece
PANAGIOTIS SP. DIMOULAS
DIMOULAS AUTOMATIONS
Kritis Str. 26
10439 Athens
Phone +30 210 883 3337
Fax +30 210 883 4436
wago.info@dimoulas.com.gr

Honduras
CILASAS S.A. de C.V.
Barrio Los Andes
7 Calle entre 14 y 15 Ave. N.O.
P.O. Box. 1061
San Pedro Sula
Phone +504 2557 1146/7
Fax +504 2557 1149

Hong Kong
National Concord Eng., Ltd.
Unit A-B, 5/F.
Southeast Industrial Building
611-619 Castle Peak Road
Tsuen Wan, N.T.
Phone +852 2429 2611
Fax +852 2429 2164
sales@nce.com.hk

Hungary
WAGO Hungária KFT
Ipari Park, Gyár u. 2
2040 Budapest
Phone +36 23 502-170
Fax +36 23 502-166
info.hu@wago.com

Iceland
S. Gudjonsson ehf.
Audbrekku 9-11
202 Kopavogur
Phone +354 520-4500
Fax +354 520-4501
export@wago.com

India
WAGO Private Limited
C-27, Sector-58, Phase-III
Noida-201 301
Gautam Budh Nagar (U.P)
Phone +91 120 438 8700
Fax +91 120 438 8799
info.india@wago.com

Indonesia
please contact WAGO Singapore

Iraq
please contact WAGO Middle East

Ireland
Drives & Controls
Unit F4, Riverview Business Park
Nangor Road
Dublin 12
Phone +353 1 4604474
Fax +353 1 4604507
info@drivesandcontrols.ie

Israel
Comtel Israel Electronic Solutions Ltd.
Bet Hapaamon
20 Hataas Street
P.O. Box 66
44425 Kefar-Saba
Phone +972 9 76 77 240
Fax +972 9 76 77 243
sales@comPhoneco.il

Italy
WAGO ELETTRONICA SRL a Socio Unico
Via Parini 1
40033 Casalecchio di Reno (BO)
Phone +39 051 6132112
Fax +39 051 6272174
info-ita@wago.com

Japan
WAGO Co. of JAPAN Ltd.
Kinshicho Prime Tower
5-7, Kameido, Koto-Ku
Tokyo 136-0071
Phone +81 3 5627 2059
Fax +81 3 5627 2055
info-jp@wago.com

Jordan
please contact WAGO Middle East

Kazakhstan
TOO INTANT
232/2, Ryskulov avenue
050061 Almaty
Phone +7 727 356 52 91/92/93
Fax +7 727 327 14 92/93
ee@intant.net
ees_sm1@intant.net

TOO Technik-Trade
ul. i. A. Protosanova, 81
070004 Ust-Kamenogorsk
Phone +7 7232 254 064
Fax +7 7232 253 251
info@technik.kz

Korea
WAGO Korea Co., Ltd.
Room 205 AnyangMegaValley,
268, Hagui-ro, Dongan-gu, Anyang-si,
Gyeonggi-do, 14056, South Korea
Phone +82 31 421 9500
info.korea@wago.com

Kosovo
please contact WAGO Bulgaria

Latvia
INSTABALT LATVIA SIA
Vestienas iela 6
Rīga, LV-1035
Phone +371 6790 1188
Fax +371 6790 1180
info@instabalt.lv

Lebanon
Gemayel Trading & Contracting
Antonins Project
P.O. BOX 70-1096
Antelias
Lebanon
Phone +961 4 521 029
Fax +961 4 521 029
info@uae.com

Lithuania
INSTABALT LIT UAB
Savanorių 187
Vilnius, 2053
Phone +370 52 322 295
Fax +370 52 322 247
info@instabalt.lt

Luxembourg
please contact WAGO Belgium

Macedonia
please contact WAGO Bulgaria

Kompjunet Inzenering
Vladimir Komarov 1A-3/9
1000 Skopje
Republic of Macedonia
Phone +389 2 521 12 00
Phone +389 2 246 11 08

Malaysia
WAGO Representative Office Malaysia
No 806, Block A4, Leisure Commerce Square,
No 9, Jalan PJS 8/9, 46150 Petaling Jaya,
Selangor Darul Ehsan, Malaysia
Phone +60 3 7877 1776
Fax +60 3 7877 2776
kian.guan.tan@wago.com

HPH Materials (M) Sdn Bhd
No. 4, Jalan Nilam 1/6
Suban Hi-Tech Industrial Park
40000 Shah Alam
Selangor, D.E. Malaysia
Phone +60 3 5638 2213
Fax +60 3 5638 8213
info@hphmaterials.com

Maledives
please contact WAGO India

Mexico
WAGO SA de CV
Av. Del Marques 38 Bodega 3
P. I. Bernardo Quintana
76246 El Marques, Querétaro
Phone +52 442 221 5946
Fax +52 442 221 5063
info.mx@wago.com

Moldova
Electroservice Slavinschi T.T.
str. Bolgarskaia 9, office 6
2001 Kishinev
Phone +373 22 274427
Fax +373 22 224481
es@es.mldnet.com

Morocco
Automatisme & Connection Maroc
23, Rue Boured, 2ème étage, appt4
Roche Noire
20300 Casablanca
Phone +212 522 24 21 72/73
Fax +212 522 24 21 75
info-fr@wago.com

Nepal
please contact WAGO India

Netherlands
WAGO Nederland B.V.
Laan van de Ram 19
7234 BW APELDOORN
Phone +31 55 36 83 500
Fax +31 55 36 83 599
info-nl@wago.com

New Zealand
please contact WAGO Australia

NHP NZ
7 Lockhart Place
Mt Wellington
New Zealand
Phone +64 9 2761967
Fax +64 9 2761992
export@wago.com

Nigeria
GIL Automations Ltd.
Daily Times Complex
2 Lateef Jakande Rd., Agidingbi
100271 Ikeja, Lagos State
Phone +234 17132672335
sales@gilautomation.com

Norway
WAGO Norge AS
Jerikoveien 20
1067 Oslo
Phone +47 22 30 94 50
Fax +47 22 30 94 51
info.no@wago.com

Oman
please contact WAGO Middle East

Pakistan
FuziLogiX Automation & Control
Suit No. 14, 5th Floor, Shan Arcade
New Garden Town, Lahore
Pakistan
Phone +92 42 594 1503 - 4
Fax +92 42 585 1431
info@fuzilogix.com

Paraguay
AESA
Av. Madame Lynch
c/Antolin Irala
2309 Asunción
Tel. +59 521674524
info@aesa.com.py

Peru
Manufacturas Eléctricas S.A.
Av O.R. Benavides 1215
15000 Lima
Phone +511 6196200
Fax +511 6196247

Philippines
please contact WAGO Singapore

Poland
WAGO ELWAG sp. z o. o.
ul. Piękna 58 a
50-506 Wrocław
Phone +48 71 3602970
Fax +48 71 3602999
wago.elwag@wago.com

Portugal
MORGADO & CA. LDA - SEDE
Estrada Exterior da
Circunvalação 3558/3560
Apartado 1057
4435 Rio Tinto
Phone +351 22 9770600
Fax +351 22 9770699
geral@morgadocl.pt

Quatar
please contact WAGO Middle East

Romania
WAGO Kontakttechnik GmbH & Co. KG
Representative Office Romania
Sos. Pipera-Tunari nr. 1/1
building 1, 2nd floor
077190 Voluntari, Ilfov
Tel. +40-(0)31 421 85 68
info-RO@wago.com

VDR & Servicii srl
Str. Valeriu Branişte, nr. 60, ap.1, sector 3
Romania
Phone +40 21 3225074/76
Fax +40 21 3225075
office@componente-automatizari.ro

Russia
OOO WAGO Contact Rus
Dmitrovskoe shosse, 157,
bldg. 12/5
127411 Moscow
Russia
Phone +7 495 663-3305
Fax +7 495 663-3308
info.ru@wago.com

OOO Decima
Projesd 4922, d. 4, str. 1
124460 Moscow / Selenograd
Phone +7 495 988 4858
Fax +7 495 988 4858
decima@decima.ru

OOO Prosoft
ul. Profsouznaya, 108
117437 Moscow
Phone +7 495 2340636
Fax +7 495 2340640
info@prosoft.ru

ITC Electronics: Moscow
Radio str. 24
105005 Moscow
Phone +7 495 775 1845
Fax +7 495 775 1848
moscow@itc-electronics.com

WAGO Branch office
Ekaterinburg
Phone +7 343 216 3426

WAGO Branch office
Novosibirsk
Phone +7 383 217 9244

WAGO Branch office
St. Petersburg
Phone +7 812 312 1918

Saudi Arabia
Saudi Electronic Trading Company
(SETRA), P.O. Box 60712
11555-Riyadh
Phone +966 1 2062277
Fax +966 1 2062277
khaled.wafai@setra.com.sa

Serbia
please contact WAGO Bulgaria

Avalon Partners doo
Patrijarha Dimitrija 24
11000 Beograd
Phone +381 11 268 5311
Fax +381 11 268 5311
office@avalon.rs

Sigma doo
Balzakova 3
21000 Novi Sad
Phone +381 21 468 431
Fax +381 21 636 1785
office@sigmadoo.co.rs

Singapore
WAGO Electronic Pte Ltd
No. 10 Upper Aljunied Link #04-04
Singapore 367904
Phone +65 62866776
Fax +65 62842425
info-sing@wago.com

Slovakia
Proelektro spol. s r.o.
Na barine 22
841 03 Bratislava - Lamač
Phone +421 2 4569 2503
info@wago.sk

Slovenia
IC elektronika d.o.o.
Vodovodna cesta 100
1000 Ljubljana
Phone +386 1568 0126
Fax +386 1568 9107
info@ic-elect.si

GENERA d.o.o.
Prevale 10
1236 Trzin
Phone +386 14393050
Fax +386 14393090
genera@genera.si

Slovenia
Elektronabava d.o.o.
Cesta 24 junija 3
1231 Ljubljana
Phone +386 1 58 99 300
Fax +386 1 58 99 409
info@elektronabava.si

South Africa
Shorrock Automation (Pty) Ltd
Postnet Suite # 219
Private Bag X 8,Elardus Park
0047 PRETORIA
Phone +27 12 4500300
Fax +27 12 4500322
sales@shorrock.co.za

Spain
DICOMAT S.L.
Avda. de la Industria, 36
Apartado Correos, 1.178
28108-Alcobendas (Madrid)
Phone +34 91 662 1362
Fax +34 91 661 0089
info@dicomat-asetyc.com

Sweden
WAGO Sverige AB
Tyskland Filial
Box 11127, 161 11 BROMMA
Besöksadress: Adolfsbergsv. 31
Phone +46 858410680
Fax +46 858410699
info.se@wago.com

Switzerland
WAGO CONTACT SA
Rte. de l'Industrie 19
Case Postale 168
1564 Domdidier
Phone +41/26 676 75 00
Fax +41/26 676 75 01
info.switzerland@wago.com

Sri Lanka
please contact WAGO India

Syria
Zahabi Co.
8/5 Shouhadaa St., P.O. Box 8262
Aleppo
Phone +963 21 21 22 235 / 6
Fax +963 21 21 22 23 7
info.uae@wago.com

Taiwan R.O.C.
WAGO Contact, Ltd.
5F., No.168, Jiankang Rd
Zhonghe City
Taipei County 23585, Taiwan
Phone +886 2 2225 0123
Fax +886 2 2225 1511
info.taiwan@wago.com

Thailand
WAGO Representative Office Thailand
4th Floor, KS Building
213/6-8 Rachada-Phisek Road
Dingdaeng, Bangkok 10400
Phone +66 2 6935611
Fax +66 2 6935612
warongkon.khankham@wago.com

US Power Distribution Co., Ltd.
4th Floor, KS Building
213/6-8 Rachada-Phisek Road
Dingdaeng, Bangkok 10400
Phone +66 2 2763040
Fax +66 2 2763049
uspower2014@gmail.com

Thailand
Itthirit Technology Co., Ltd.
Vision Business Park 2 Floor 4
Soi Raminthra 55/8, Watcharapon Road
Tharaeng, Bangkhen District
Bangkok Thailand 10220
Tel. +66 2 347 0780
Fax +66 2 347 0772
sales@itthirittechnology.com

Tunisia
please contact WAGO France

Turkey
WAGO Elektronik Sanayi ve Ticaret
Ltd. Şti.
Yukan Dudullu Mahallesi Bayraktar
Bulvarı
Cad. Hattat Sok. No. 10
34775 Ümraniye - Istanbul
Phone +90 216 472 1133
Fax +90 216 472 9910
info.tr@wago.com

Ukraine
NPP Logicon
Predslavinskaya street, 39, office 303
03150 Kiev
Phone +380 44 5228019
Fax +380 44 2611803
info@logicon.ua

OOO Micropribor
ul. Kotelnikova, 4
03115 Kiev
Phone +380 44 5369386
Fax +380 44 5369387
sales@micropribor.kiev.ua

United Arab Emirates (UAE)
WAGO Middle East (FZC)
SAIF Zone, Q4-282
P.O. Box 120665
Sharjah, UAE
Phone +971 6 5579920
Fax +971 6 5579921
info.uae@wago.com

Uruguay
Fivisa Electricidad
Avda. Urugay 1274
11100 Montevideo
Phone +59 829 020 808
Fax +59 829 021 230
info@fivisa.com.uy

USA
WAGO CORPORATION
N120 W19129 Freistadt Road
Germantown, WI 53022
Phone +1 262 255 6222
Fax +1 262 255 3232
Toll-Free: 1-800 DIN Rail (346-7245)
info.us@wago.com

Venezuela
PETROBORNAS, C.A.
C.C. PLAZA AEROPUERTO - PISO 1 -
LOCAL P1-B-03
(8015) UNARE - PUERTO ORDAZ -
ESTADO BOLÍVAR
REPÚBLICA BOLIVARIANA DE
VENEZUELA
Phone +58 286 951 3382
Fax +58 286 951 3382
info@petrobornas.com

Vietnam
please contact WAGO Germany
(Minden)

Version: 03/2017
Current addresses at www.wago.com

Notes

Notes

Notes

Notes

Notes

Notes

WAGO is a registered trademark of WAGO Verwaltungsgesellschaft mbH.

WE INNOVATE!

WAGO Kontakttechnik GmbH & Co. KG
Postfach 2880 · D · 32385 Minden
Hansastraße 27 · D · 32423 Minden
info@wago.com
www.wago.com

Headquarters	+49 571 887 - 0
Sales	+49 571 887 - 44222
Order Service	+49 571 887 - 44333
Fax	+49 571 887 - 844169

0888-7001/0100-6901 – Rail-Mount Terminal Block Systems 2017/2018 GB – 05/2017-00 – Printed in Germany – Subject to design changes